Prime Computer User Guide

MAN 1946.

For Terminals

MARCH 1975 REV. 7.

74. PAGES.

PRIME COMPUTER, INC., 145 PENNSYLVANIA AVENUE, FRAMINGHAM, MA. 01701

MAN 1946

PRIME SYSTEM AND USER TERMINALS

USER GUIDE

March 1975

PRIME
COMPUTER, INC.

[145 Pennsylvania Ave., Framingham, Mass., 01701]

First Printing March 1975

Copyright 1975 by

Prime Computer, Incorporated

145 Pennsylvania Avenue

Framingham, Massachusetts 01701

Performance characteristics are
subject to change without notice.

CONTENTS

		Page
SECTION 1	INTRODUCTION	1-1
	SCOPE OF HANDBOOK	1-1
	PRIME SYSTEM AND USER TERMINALS	1-2
	CRT TERMINAL SPECIFICATIONS	1-5
	TELETYPE MODEL 33 SPECIFICATIONS	1-6
SECTION 2	OPERATION	2-1
	CRT TERMINALS	2-1
	TELETYPE TERMINALS	2-1
	LOW SPEED TAPE UNITS	2-1
SECTION 3	INSTALLATION	3-1
	SITE PLANNING	3-1
	INSTALLATION - CRT TERMINAL	3-1
	INSTALLATION - TELETYPEWRITER (MODEL ASR-33)	3-6
	CABLING	3-11
SECTION 4	SYSTEM LEVEL PROGRAMMING	4-1
	DOS AND DOS/VM COMMANDS	4-1
	FORTRAN FORMATTED I/O	4-1
	IOCS ROUTINES	4-1
SECTION 5	ASSEMBLY LANGUAGE PROGRAMMING	5-1
	PROGRAMMING TERMINALS THROUGH SYSTEM OPTION CONTROLLER	5-1
	SPECIAL FEATURES	5-6
	AMLC PROGRAMMING	5-7
SECTION 6	TEST AND MAINTENANCE	6-1
	LOADING TEST PROGRAMS	6-1
	TERMINAL TEST PROGRAM	6-1

CONTENTS

		Page
APPENDICES		
A	TELETYPE STRAPPING	A-1
B	USING OPTIONAL VISTAR TERMINAL	B-1
C	SOFTWARE ALTERATIONS FOR HIGHER TERMINAL OPERATING SPEEDS	C-1
D	EIA CABLE STRAPPING FOR ALTERNATE TERMINALS	D-1

ILLUSTRATIONS

Figure No.		Page
1-1	Prime System and User Terminal Configurations	1-4
3-1	CRT Terminal Rear Interface Panel	3-4
3-2	Wiring to Display Current Loop Terminal Strip	3-5
3-3	Model 33 Typing Unit Hold-Down Screw Storage	3-8
3-4	Model 33 Cover Mounting	3-8
3-5	Model 33 and Stand	3-9
3-6	External Connections to S.O.C.	3-12
3-7	Connecting Terminals to CPU Serial I/O Ports	3-13
3-8	Cabling Terminals to Direct-Connect AMLC	3-14

TABLES

Table No.		Page
3-1	Physical Characteristics	3-2
3-2	Electrical & Environmental Characteristics	3-2
5-1	PIO Instructions Used by Standard Terminals	5-2
5-2	Control Word Setup for Standard Terminals	5-4

FOREWORD

This user guide describes the standard Prime system terminals, including user terminals connected to a multi-user system based on DOS/VM. It consists of the following sections:

Section	1	Introduction
	2	Operation
	3	Installation
	4	System-Level Programming
	5	Assembly Language Programming
	6	Test and Maintenance

SECTION 1

INTRODUCTION

SCOPE OF HANDBOOK

This handbook provides information required to interconnect and program Prime system and user terminals.

The following Prime documents should be available for reference:

Document and Contents	Document No.
Prime System Reference Manual (Instruction set, addressing modes, input/output programming)	MAN1671
Prime Macro Assembler Language Reference Manual (Assembly language syntax and pseudo-operations)	MAN1673
Prime Installation and Maintenance (CPU physical characteristics, maintenance practices)	MAN1677
RTOS Reference Guide (Use of RTOS Executive and description of queue-driven real-time device drivers)	MAN1856
System Option Controller User Guide (Detailed serial interface programming and interconnection details)	MAN1944
Asynchronous Multiline Controller User Guide (AMLC programming and interconnection details)	MAN1883

Vendor manuals for the standard terminals are:

ASR/KSR-33

Teletype Corp. Bulletin 310 Vol. I, Vol. II.

Teletype Corp. Bulletin 1184B Parts Manual

Model 33 RO, ASR, KSR Sets (3300, 3320 Series) Wiring Diagrams

ASR-35

Teletype Corp. Bulletin 280B, Vol. I, Vol. II.

Teletype Corp. Bulletin 1187B, Parts Manual

Model 35 Wiring Diagrams.

CRT Display

Vistar Technical User's Manual Maintenance Instructions Vistar.

PRIME SYSTEM AND USER TERMINALS

Prime supplies system and user terminals in the following standard models:

Prime Type	Manufacturer's Model	Description
3101 3101-A	ASR-33 Teletype	Electromechanical teleprinter with manual keyboard, 10 cps paper roll printer, accessory paper tape reader and punch.
3103 3103-A	ASR-33 Teletype	Same as 33ASR but without tape reader/punch.
3105 3105-A	ASR-35 Teletype	Same functions as 33ASR but larger, heavy duty model.
3129 3129-A	INFOTON VISTAR-GT CRT Display/ Keyboard	Alphanumeric video display with ASCII-encoded keyboard and serial interface for Teletype-compatible serial data lines.

Teletypes

The familiar Model 33 Teletypes are the standard Prime system terminal. These reliable electromechanical terminals have the advantage that a single device can provide keyboard input, hard-copy output, and auxiliary paper tape input or output. The Model 35 Teletype has the same capabilities but is larger and built for heavy duty operation.

Prime supplies Model 33 terminals with either 50 or 60 Hz motors and friction feed for roll teletypewriter paper. (Sprocket feed for multiple-copy business forms is optional at extra cost.) They operate at 10 characters per second (110 Baud), feature four-row keyboards and utilize ASCII (American Standard Code for Information Interchange). The typewheel-keytop combination generates alphas, numerics, and many special control codes in even parity. There is answer-back on most configurations. Transmission mode is wired at Prime for full duplex. Current loop interface is standard.

CRT Terminals

The Infoton video display terminals ("CRT terminals") perform the same functions as a Teletype but operate at much higher output rates (up to 9600 Baud) and do not provide hard copy. They are favored for DOS/VM user terminals or as the system terminal in a system that has a character or line printer.

Functionally, the electromechanical and video terminals are interchangeable; all operate on the ASCII serial asynchronous communication code.

Teletypes operate at a fixed 110 Baud rate using 20 mA current loop levels. CRT terminals operate at various rates according to the system software with which they are used, and operate at EIA voltage levels (although current loop operation is optional). From a programming standpoint, they are interchangeable, with allowances being made for receive and transmit data rates.

Configurations

Terminals may be connected to Prime systems in several ways. In single-terminal systems, the standard method is to connect to System Option Controller serial data Port no. 1, as shown in Figure 1-1A. All standard Prime program development software (DOS, the Editor, Compiler, IOCS, etc.) uses Port 1 as the default terminal. Port 1 is also assumed to control the supervisor console in a multi-user DOS/VM system.

Prime reserves Ports 2, 3 and 4 for the character printer, auxiliary 9600 Baud CRT display, and serial card reader, and the IOCS routines for these devices provide their specific needs. Thus, while it is possible to connect terminals to these other ports, the user must develop appropriate software to communicate with them.

Up to four serial asynchronous terminals may be connected to the Serial I/O ports of the Prime CPU. (See Figure 1-1B.) This is the standard connection for the user terminals in a Prime 300 four-user DOS/VM system (which also has a supervisor console on SOC port No. 1). Terminals may be connected to the serial I/O ports of a Prime 200 as well, but the user must control them through software that generates its own timing and handles the four ports individually on a bit-by-bit basis.

For Prime 300 multi-user DOS/VM systems or custom serial communication systems employing more than four terminals, the Asynchronous Multi-Line Controller (AMLC) is the required interface. (See Figure 1-1C.) It can accommodate up to 16 terminals or data set connections. (In a DOS/VM system, the AMLC handles up to 15 terminals with the supervisor console remaining on SOC Port No. 1.)

For cabling and interconnection details, see Section 3.

Alternate Terminals

Many other hard-copy or video display terminals are compatible with Prime EIA serial data connectors. For special instructions on installing certain alternate terminals, see Appendix D.

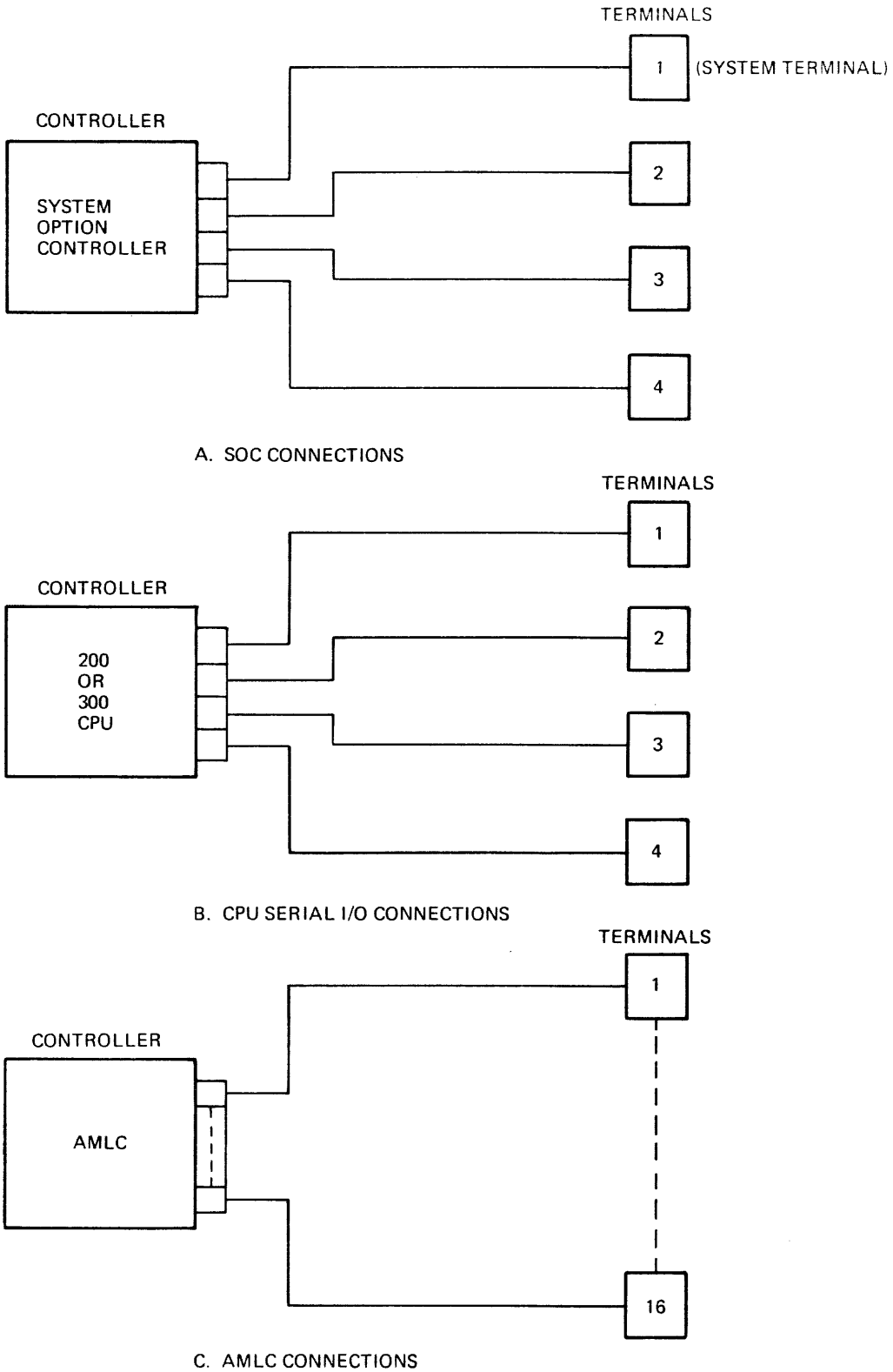

Figure 1-1. Prime System and User Terminal Configurations

CRT TERMINAL SPECIFICATIONS

Screen Format

Characters per line	80
Lines per display	24
Character set	64 character ASCII upper case
Character format	5 x 7 dot matrix
Character size	0.08 inch x 0.19 inch, nominal
Refresh rate	50 Hz or 60 Hz
Viewing area	9 inches x 7 inches
Color	White - P4 phosphor
Readibility	Screen easily read without disruptive reflections in a 100 foot-candle illumination.

Mechanical

Size	13 inches high, 19 inches wide, 23 inches deep
Weight	40 pounds

Environmental

Operating temperature	0° to 50°C
Storage temperature	-30° to 70°C
Humidity	0 to 95% non-condensing

Electrical

Power consumption	125 watts
Domestic power	1-5 - 125 volts; 60 Hz
Export power	105 - 125, 205 - 250 volts; 50 Hz

Standards

Underwriter's Laboratory

Export models conform to requirements established by British Post Office Telecommunications Headquarters, the standards of the Verein Deutscher Elektrotechniker (VDE), and the Canadian Standards Association (CSA).

Signal Code	8-Level Serial ASCII with one stop and one start bit for 10-bit character length. Data rates 75, 110 and 150 to 9600 Baud.

TELETYPE MODEL 33 SPECIFICATIONS

Signal Code Characteristics	8-Level Serial ASCII with one start and two stop bits for 11-Unit Transmission Pattern at 110 Baud.
Electrical	
Power Requirements	115 volts ac ± 10%, 50 or 60 Hz ± 0.45 Hz, single phase
Signal line current	0.020 Amp
Printing and Paper or Form Handling	
Feed	Six lines per inch, adjustable for single or double line feed
Paper or Form	
Friction Feed:	8-1/2 inches wide, max. 5-inch diameter roll
Sprocket Feed*:	8-1/2 inches wide; 7-, 8-1/2, 9-, 10-, 11-, and 12-inch form lengths or multiples of 1/3 or 1/2 thereof.
Characters and Line	
Friction Feed:	10 characters per inch, max. 74 character line
Sprocket Feed*:	10 characters per inch, max. 72 character line
Standards	UL, CSA approved

*Optional at extra cost.

SECTION 2

OPERATION

CRT TERMINALS

To operate the CRT terminal for the first time, perform the Initial Operation and Checkout in Section 3.

For operation with standard Prime software, make sure the controls are set up as follows before beginning operation:

LINE/LOCAL	LINE
POWER	ON

Thereafter, the terminal is operated like any teleprinter.

NOTE

See Appendix B for operation of the optional VISTAR model with block and roll modes and cursor control.

TELETYPE TERMINALS

To operate a Teletype terminal for the first time, perform the Initial Operation and Checkout in Section 3.

In normal operation, it is only necessary to turn the rotary switch on the right front panel to LINE. If power is connected, and the CPU power is also on, the motor and type head will remain stationary. If the type head chatters, the CPU is off or the signal line is open.

Make sure the tape punch OFF button is depressed. (Press punch ON to obtain a tape copy of everything typed or printed.)

LOW SPEED TAPE UNITS

Teletype models ASR-33 and ASR-35 include 10-character-per-second paper tape reader/punch mechanisms. These provide an alternative to the high-speed paper tape device in compact Prime systems.

The following procedures summarize the highlights of tape loading and operating methods. For full details, refer to the manufacturer's technical manuals, supplied with the equipment.

Threading Reader

1. Press release latch and flip tape guide cover up.

2. Move tape control lever to FREE position.

3. Insert tape over sprocket wheel, between edge guides. Close and latch tape cover. Tug tape to make sure it is feeding properly. Leave positioned just before start of text.

NOTE

Make sure starting end of tape is in reader. (Check tape label.)

4. Return control lever to STOP.

Starting Reader

Reader start and computer start in CPU RUN or LOAD mode must be coordinated:

ASR-33: Press computer START, then momentarily press reader control lever to START position.

ASR-35: Set MODE rotary switch to KT, press CTRL and Q keys simultaneously, and press computer START. Then move reader control lever to RUN.

NOTE

For applications in which the CPU software contains reader start and stop characters, it is not necessary to start the tape manually.

Starting Punch

ASR-33: Press punch ON button.

ASR-35: Set rotary switch at KT.

The unit will then punch tape when the computer outputs characters to the printer. No printing occurs if output is in invisible format generated by Assembler, Compiler or MDL.

SECTION 3

INSTALLATION

SITE PLANNING

Physical, electrical and environmental requirements for the Teletype and CRT terminals are summarized in Tables 3-1 and 3-2. There is no special installation requirement except that adequate access at the sides and rear should be allowed for cabling, adjustments and maintenance.

Both the CRT terminal and the Teletype may be placed on any table surface like a standard typewriter. Alternatively, the Teletype may be mounted on the supplied stand.

INSTALLATION - CRT TERMINAL

Unpackaging and Mounting

The CRT Terminal is packaged in a standard corrugated cardboard shipping carton. Open the carton (observing THIS SIDE UP and other printed instructions) and lift the terminal out. It is supplied completely assembled except for the rubber feet, which are supplied in a small package within the carton. If the terminal is to be mounted free on a table surface, install the rubber feet in the threaded holes in the bottom. The same holes can be used if the terminal is to be bolted in place (as on a cabinet drawer slide).

Supplied with the CRT is an interconnecting cable with MOLEX connector at one end. Plug it into the EIA receptacle on the rear panel. The other end is a standard EIA connector to match the Prime interface cable.

Also plug the AC power cord into the appropriate outlet (115 or 230 Vac, 50 or 60 Hz, as ordered).

Table 3-1. Physical Characteristics

Unit	Dimensions	Weight	Cabling
Teletype Model 33	22" W x 45" H x 19" D (TTY and stand)	56 lbs.	25'
Teletype Model 35	40" W x 38" H x 24" D	225 lbs.	25'
CRT Terminal	19-5/8" W x 13" H x 24" D	45 lbs.	

Table 3-2. Electrical & Environmental Characteristics

Component	AC Voltage Low	AC Voltage High	Hz	Amps (Run)	Amps (Start)	Temp.°F Low	Temp.°F High	Temp. Max. Rate of Change	RH	BTU	Power Cords
Teletype Model 33	99	131	59.5 to 60.5 49.5 to 50.5	4	15 15	40°	110°	--	95%	785/hr	1
Teletype Model 35	99	131	59.5 to 60.5 49.5 to 50.5			40°	110°	--		785/hr	1
CRT Terminal	105	125	50 or 60 Nominal			32°	122°	--	95%		1

Rear Switch Panel Setup

The switch and connector panel at the rear of the display (Figure 3-1) must be set up to match the type of interface and the software requirements as follows:

NOTE:

The transmit rate for the VISTAR-GT is the same as the receive rate. See Appendix B for VISTAR settings which include provisions for different transmit and receive rates plus an auto CR feature.

Switch	Standard Prime Setting	
PARITY	MARK	
FDX/HDX	FDX	
CHAR LENGTH	11 for 75 or 110 Baud; 10 for 150 Baud or higher.	
RECEIVE RATE	Depends on terminal application:	
	System terminal connected to SOC or Option A:	110*
	DOS/VM user terminal connected to CPU Serial I/O Ports:	300
	DOS/VM user terminal connected to AMLC:	300 or 1200 (depends on how DOS/VM is configured)

* For optional higher data rates with modified DOS/VM software, see PE-T-129.

Wiring of Current Loop Interface

NOTE: Ignore this paragraph if the EIA connection is used.

Full duplex and 20 milliampere operation are selected by wiring. Figure 3-2 illustrates the wiring for the various modes of operation. Also illustrated is how an internal current source can be used in half duplex mode. Four-wire twisted pairs are recommended for full duplex.

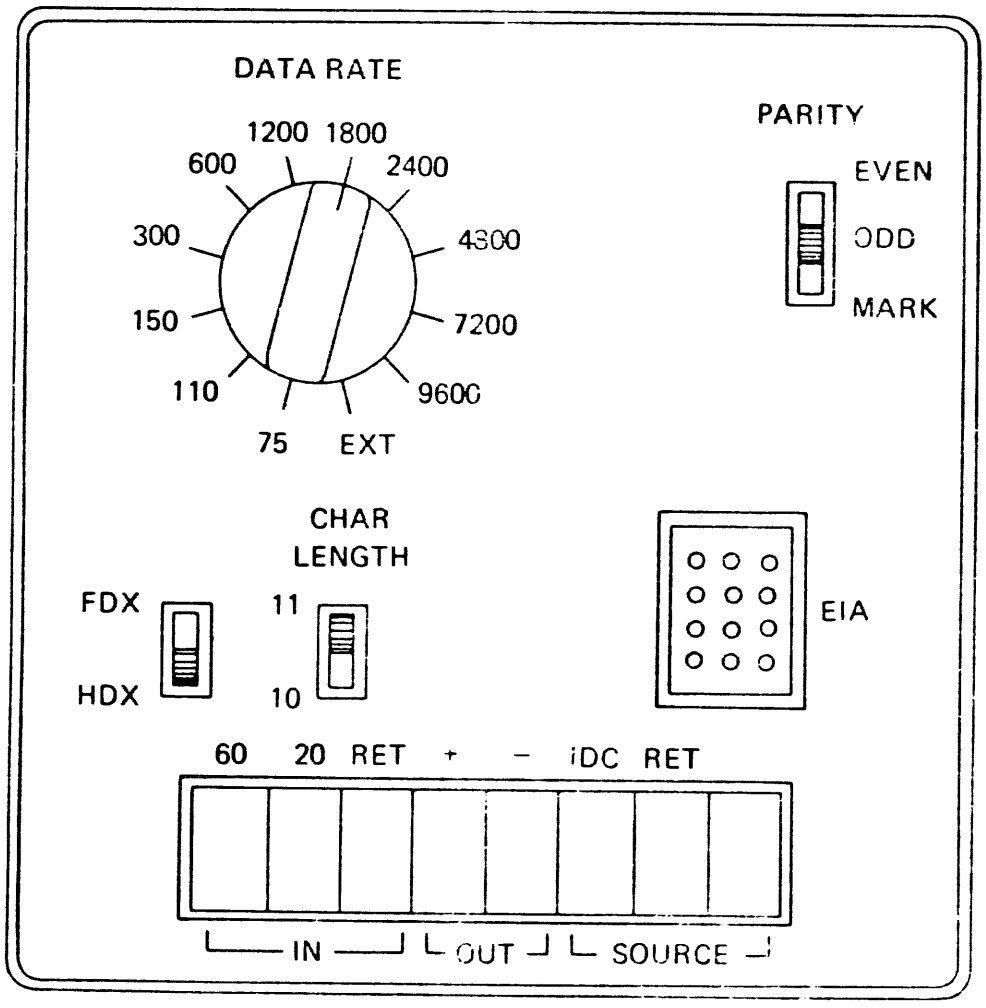

Figure 3-1. CRT Terminal Rear Interface Panel

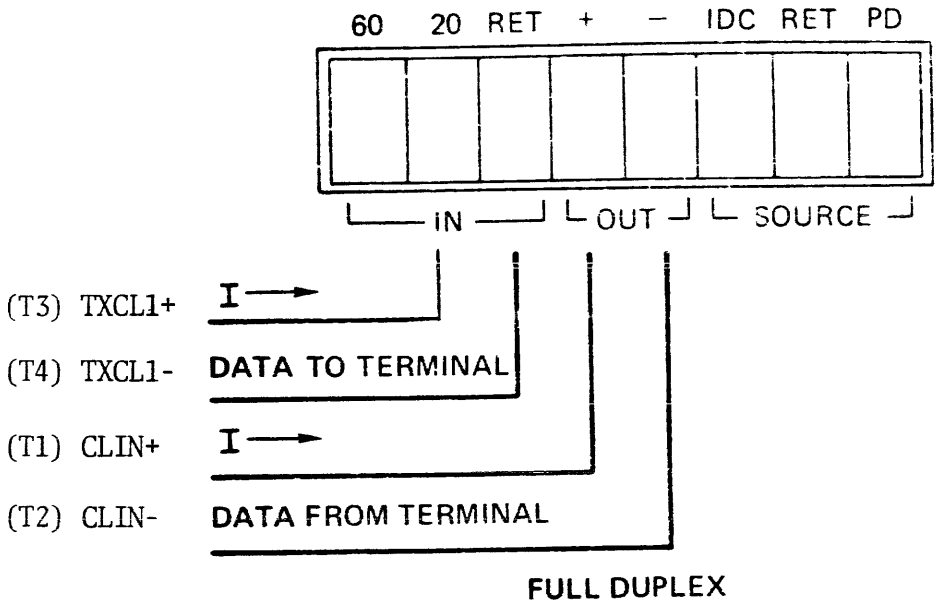

Figure 3-2. Wiring to Display Current Loop Terminal Strip

When the display is connected to the data line by the EIA RS-232C interface, the current loop output is also available for transmitting data to other VISTAR displays or to other Teletype-like devices.

Initial Operation and Checkout

After the CRT terminal is completely installed and cabling is connected (as described later in this section), perform the following initial operation and checkout:

1. Set the LOCAL/LINE switch at LOCAL and POWER switch ON. The POWER switch should illuminate and approximately 30 seconds later the blinking cursor should be visible.

2. Adjust the INTENSITY control for viewing comfort.

3. Adjust the HORIZONTAL and VERTICAL controls for a stable display.

4. Type a message and make sure it is displayed correctly on the screen.

5. See Section 2 for standard control setup for operation as a Prime system or user terminal.

INSTALLATION - TELETYPEWRITER (MODEL ASR-33)

Unpackaging

Teletypewriters are packaged in shipping containers provided by Teletype Corporation. Teletypes are configured at Prime's factory to operate in full duplex, 20 mA current loop with eighth bit marking from print station. The device cable (CBL 0209 or CBL 0603) has been attached. Refer to Appendix A for specific conversion information.

The teletypewriter set is packed in one carton. Observe all caution and instruction labels on the carton before breaking the seals.

a. Cut tapes at center and end seams. Open cartons and remove the upper filler pads. Remove typing unit carefully to avoid damaging the pastic cover. Take out the remaining carton fillers and the stand (if used).

b. The typing unit and subbase are mounted on a shipping pallet by six screws. Remove the six screws, being careful that the typing unit does not fall off the pallet. Once the shipping screws are removed, the typing unit is retained only by the cover.

NOTE: Retain the forward mounting screws and associated flat washer. This screw is used to secure the typing unit when shipped to another location without its cover fastened in place. The screw and washer may be stored in the TP181104 cable slip (included in bag of hardware with pedestal mounted units) to be mounted on the typing unit frame between the two dashpot mounting screws (Figure 3-3).

c. Remove typing unit from the shipping pallet.

   CAUTION: DO NOT TILT THE TYPING UNIT AFTER IT HAS BEEN REMOVED FROM THE PALLET. THE TYPING UNIT FLOATS ON RUBBER ISOLATORS AND MAY PULL LOOSE IF IT IS TILTED.

d. Remove the tape from across the top of the cover and take out the cables, platen knob, and paper spindel from the paper recess. Unwrap the parts.

e. Remove the control knob and detach the nameplate (Figure 3-4) by pulling it down and out. Remove the four front and three rear cover mounting screws and two screws to the left of the punch. Then gently lift the cover from the subbase.

f. Remove the twist tie holding the carriage to the left side frame of the typing unit.

g. If a stand is used, remove its two rear panel mounting screws and take panel off. Remove the copyholder, if used, from inside the stand. Remove the bag tied to the stand and place its hardware contents on the bench.

h. The teletypewriter set should be thoroughly lubricated before placing it into service and relubricated after a short period of service. Thereafter, maintain the regular lubrication intervals as required in the appropriate lubrication sections.

   (Refer to the Vendor Manual for lubrication instructions).

i. If the teletypewriter set is to be bolted to the floor, remove the front screw in each leg of the stand (Figure 3-5).

j. Install the plug button, included in the bag of hardware, in the forward hold in the bottom of the subbase.

k. If the teletype stand is used, route the device cable and the AC power cord into the base on out of the cutout in the lower rear.

l. Place the subbase and typing unit on top of the stand so that its back edges and sides line up with the back edges and sides of the stand. Install the two retaining clips, included in the hardware bag, on the base at the rear (one each end) and snap them in place on the stand.

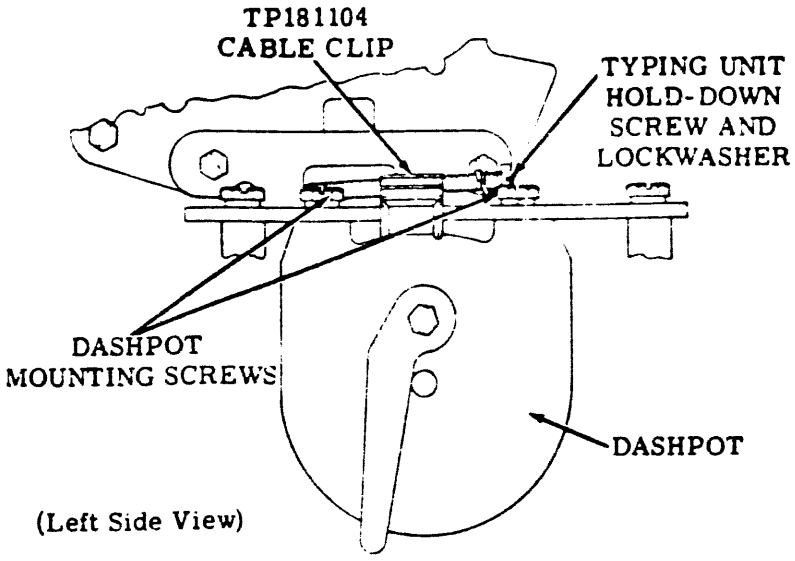

Figure 3-3. Model 33 Typing Unit Hold-Down Screw Storage

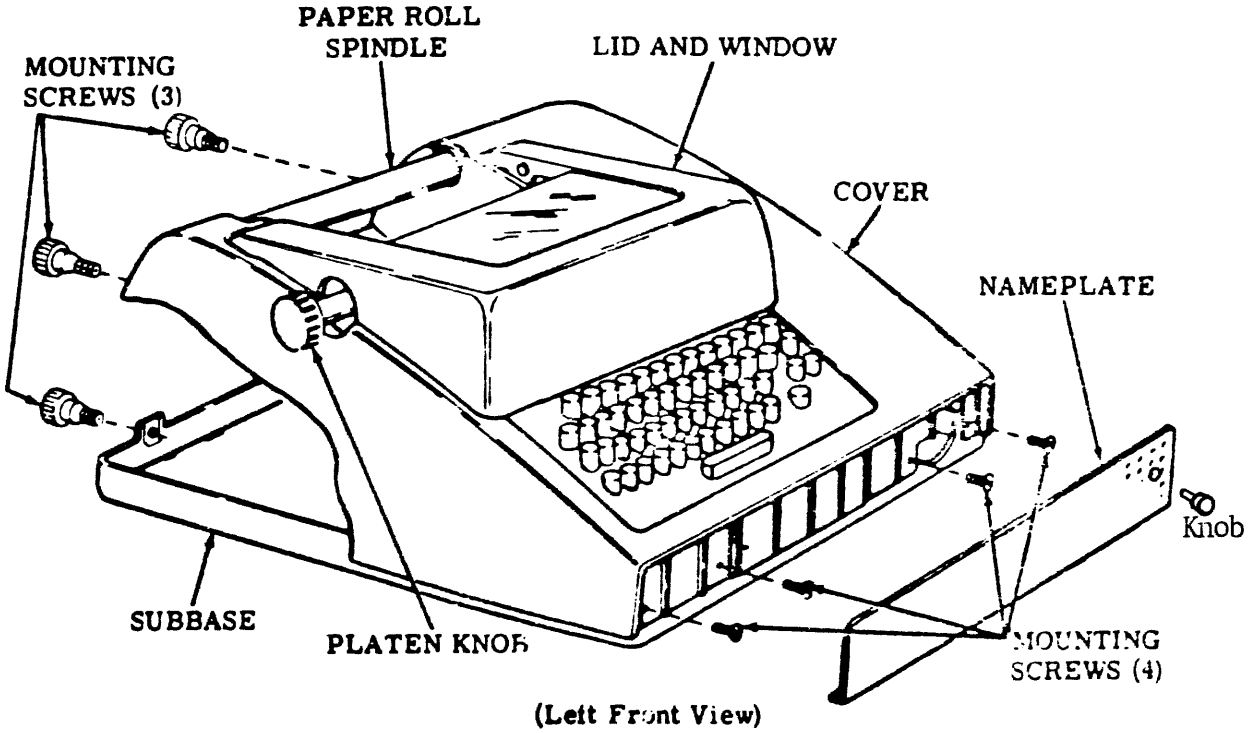

Figure 3-4. Model 33 Cover Mounting

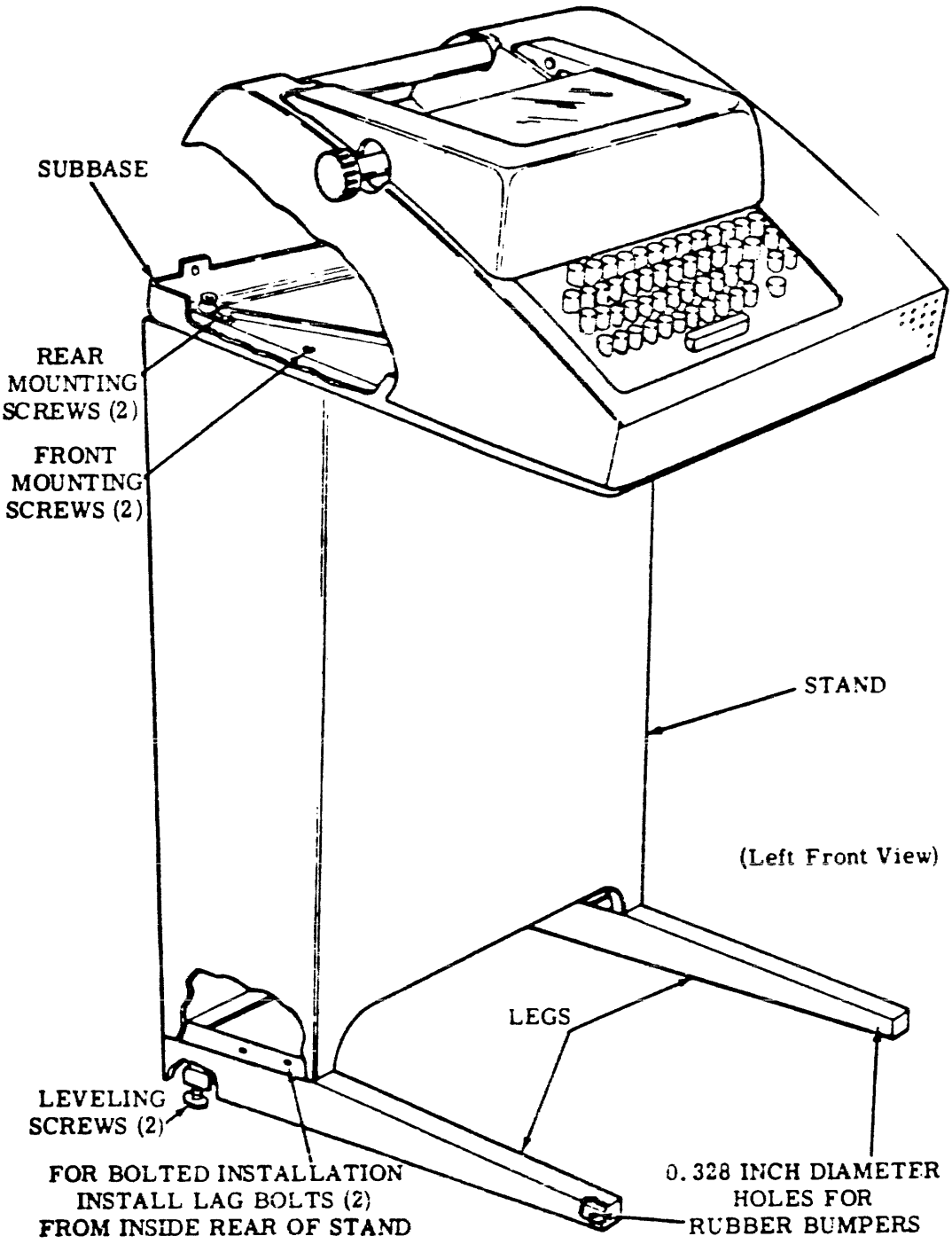

Figure 3-5. Model 33 and Stand

m. Mount the base to the stand from the bottom with four No. 14Z screws and associated flat washers.

n. Check Dashpot Orifice (Space Area) adjustment, since altitude may have some effect on dashpot operation. Reference the Vendor Manual, Section 574-122-700TC.

o. Place the typing unit cover on the subbase (Reference Figure 3-4), making sure that all seams are tight and that keyboard pushbuttons, etc., are properly aligned. Insert and tighten the cover mounting screws removed in Step e.

p. Replace the nameplate and power-on switch rotary knob.

q. Install the ribbon, punch paper tape, and typewriter paper. Refer to the Vendor Manual, Section 574-100-201TC for specific instructions.

r. Connect CBL 0209 (or CBL 0603) to edge connector D of the SOC controller. The edge connector is identified by color coded dot(s) on the board stiffener which match dots on the connector.

s. Connect the power cord to ac source (115 or 230 volt, 50 or 60 Hz, as ordered).

Initial Operation and Checkout

After the Teletype is completely installed and cabling is connected (as described later in this section), perform the following initial operation and checkout:

a. Turn CPU power on and turn Teletype LINE-OFF-LOC switch to LINE. On ASR-35's, turn the MODE switch to K. The motor should turn on and the print mechanism should remain motionless. If the printer chatters, the line is open; shut down power and check cabling.

b. Type a Line Feed and Carriage Return. Check that they are performed.

c. Type Control R. (TAPE) Observe that the Paper Tape Punch turns ON.

d. Type a series of A's. Observe that '301's are punched (8th bit marking) and that A's are printed.

e. Type Control S (X OFF).

f. Type 2 Rubouts.

g. Type Series of B's.

h. Type Control T (Tape Off).

i. Type Series of C's. Observe that the punch is not punching.

j. Tear off the tape and mount it on the TTY Reader.

k. Type Control Q (X ON). Observe that the tape reader is started and A's are printed. Also observe that the reader stops without printing B's or C's.

CABLING

Terminal cabling varies according to the type of terminal and the interface used (CPU Serial I/O, System Option Controller or AMLC). The various options are shown in Figures 3-6 through 3-8. Prime cables are supplied, but must be selected at the time of order.

System Option Controller Cabling

Terminals are connected to rear edge connectors C or D of the System Option Controller as shown in Figure 3-6. The standard interconnection for a Model 33 Teletype used as the system terminal is the one shown through cable CBL1452-001. For connector pin assignments, refer to the System Option Controller User Guide.

A CRT terminal may be connected to the same current-loop connections. A CRT may also be connected to Port 1 through J1 of the EIA cable. In either case, the standard software assumes it is to operate at 110 Baud. For higher speeds, patches must be made to the software (and in disk systems, the bootstrap). See Appendix C for details.

Serial I/O and DOS/VM User Terminals

Up to four terminals may be cabled to CPU rear edge connector H as shown in Figure 3-7. This is the standard method of interfacing the user terminals to a Prime 300 in a four-user DOS/VM system. On a Prime 200, up to four independent terminals may be operated through the CPU serial I/O ports. In such applications, the program must determine data rates and input bit sampling time. (See Section 5.)

AMLC Cabling

Figure 3-8 shows how EIA or current-loop terminals are cabled to an Asynchronous Multi-Line Controller (AMLC). Each AMLC accommodates eight or sixteen devices, depending on model. For connector pin assignments, refer to the AMLC User Guide.

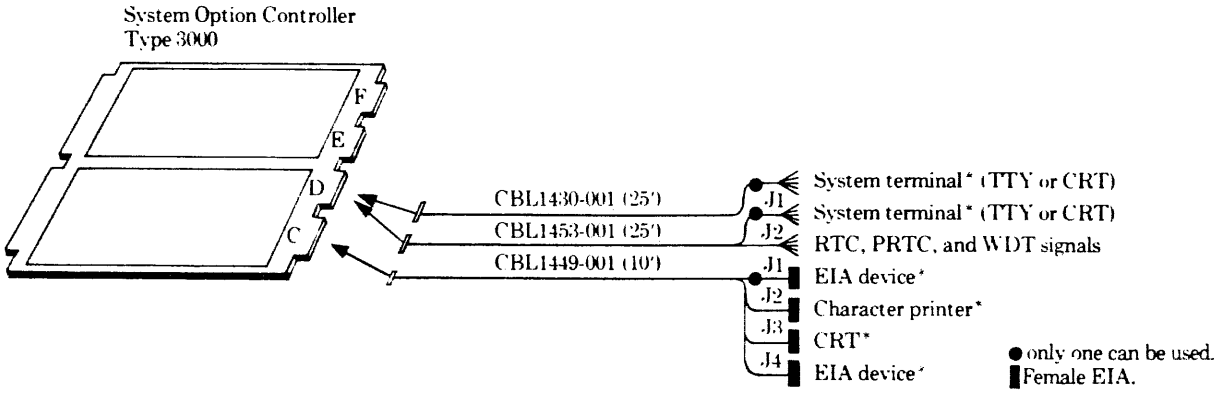

*One input device and one output device can operate simultaneously.

Figure 3-6. External Connections to S.O.C.

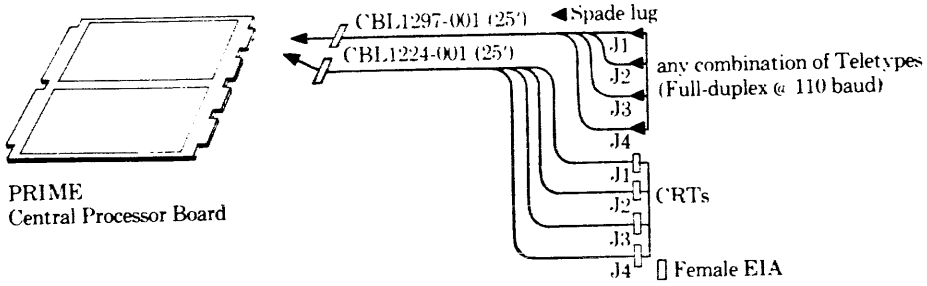

Figure 3-7. Connecting Terminals to CPU Serial I/O Ports

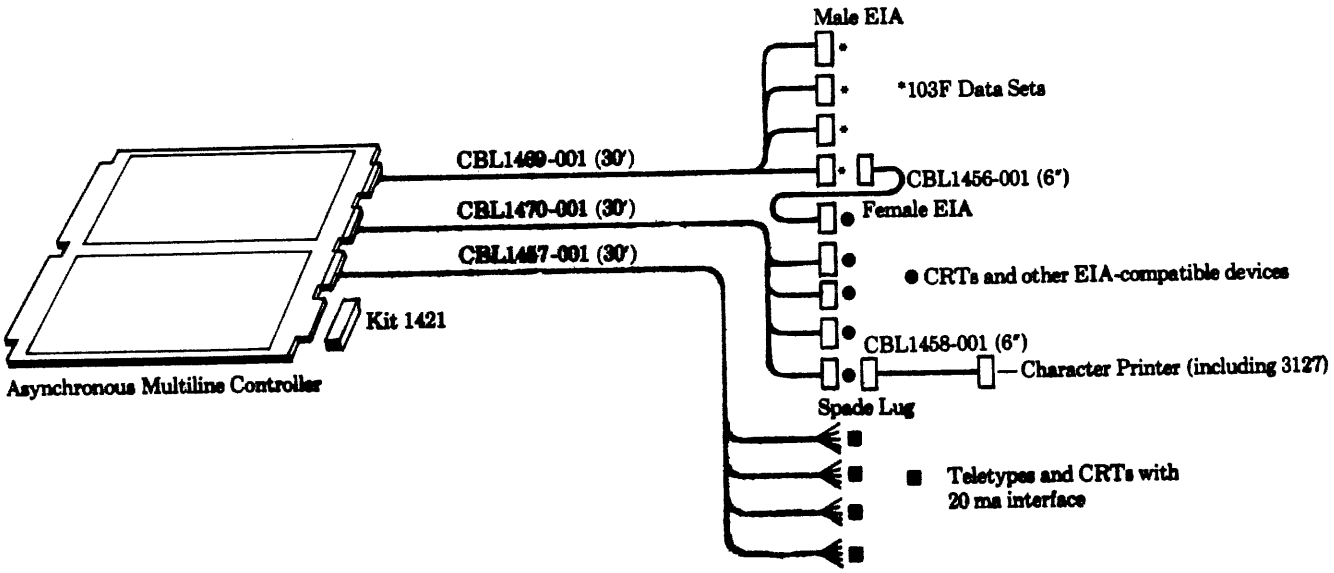

Figure 3-8. Cabling Terminals to Direct-Connect AMLC

SECTION 4

SYSTEM LEVEL PROGRAMMING

DOS AND DOS/VM COMMANDS

To the DOS system terminal or a DOS/VM user terminal, the following keyboard commands are available; they direct a printout to the terminal itself:

COMINPUT TTY

LISTF

PM

AVAIL

STATUS

SLIST

SIZE

For details, see the DOS-DOS/VM User Guide.

FORTRAN FORMATTED I/O

The user terminal can be accessed through standard FORTRAN formatted READ and WRITE statements. The default unit number is 1.

IOCS ROUTINES

The Input/Output Control System (IOCS) provides a set of input/output and control routines to support formatted I/O in the FORTRAN compiler and for direct user access in assembly language programs. They are:

O$AA01	Output to printer or low-speed punch, ASCII
I$AA01	Input from keyboard or low-speed reader, ASCII
C$A01	Low speed reader/punch control functions
O$BA01	Output to printer or low-speed punch, Binary
I$BA01	Input from printer or low-speed reader, Binary

For a CRT terminal, input is from the keyboard and output is to the display screen; the control subroutine C$A01 does not apply. For an ASR Teletype, C$A01 determines whether the keyboard/printer or low-speed tape reader/punch is to operate. The calling sequence is:

```
CALL C$A01  (Key, Name, Unit, Altrtn)
```

where only the 'Key' parameter is relevant. 'Key' may have the following values:

Key	Function
1	Open to read (start low-speed reader)
2	Open to write (punch leader)
3	1 and 2 combined
4	Close (punch trailer if output)
5	Not used
6	1 and 2 combined
7	Rewind (no effect on ASR)

When reading has been enabled (key of 1) the low-speed reader starts running continuously in full-duplex with the printer disabled. Following a close command (key of 4) tape stops within one frame (Model 33) or two frames (Model 35).

The four input/output routines follow the normal IOCS calling sequence pattern, as in:

```
CALL  <Subroutine>  (Unit, Ba, Nchars, Altrtn)
```

where the arguments are:

Unit	IOCS Logical Unit No. (1 is the default assignment for standard terminals).
Ba	Buffer Address (e.g., BUFR)
Nchars	Number of characters to be transferred
Altrtn	Alternate return. If Altrtn = 0, alternate returns are not to be taken. If Altrtn $\neq$ 0, the alternate return is taken if there is an error condition and error codes appear in the A and B registers. In addition, an error message may be printed on the user terminal.

The same functions can be invoked by the device-independent calling sequence:

```
      |RDASC|
      |WRASC|
CALL  |RDBIN|  (Unit, Ba, Nchars, Altrtn)
      |WRBIN|
```

The following error conditions are defined:

Condition	Printed Message	A Register	B Register
End of tape on low speed reader	I$AA01 EOF	0	IE (packed ASCII)

The previous input/output routines process bytes in blocks. For single-character transfers, the following collection of TYPERS routines may be used:

TNOU
TNOUA
TONL
TIDEC
TODEC
TIOCT
TOOCT
TIHEX
TOHEX
T1OU
T1IN
T1OB
T1IB

For details on the use of these routines, refer to the DOS-DOS/VM User Guide.

SECTION 5

ASSEMBLY LANGUAGE PROGRAMMING

PROGRAMMING TERMINALS THROUGH SYSTEM OPTION CONTROLLER

Up to four terminals can be controlled through the asynchronous receiver/transmitter ports of the System Option Controller. For full descriptions of the functions available and the instruction set, refer to the System Option Controller User Guide. Table 5-1 summarizes the instructions most commonly used for terminal control and Table 5-2 shows typical control word setups.

SOC Programming Techniques

The procedure for operating the SOC Serial Interface depends on the I/O technique - programmed I/O, Interrupt, or DMA/C.

For any mode, the user must set up the transmit and receive control registers for the desired mode of operation (half or full duplex), clock rate, port selection, and data format (number of bits per character, parity, number of stop bits).

Programmed I/O: The user tests the ready condition with the appropriate SKS instruction to determine whether a character is ready for input (receive) or output (transmit) by an INA or OTA command.

Interrupt-Driven Transfers: The user selects the interrupt mode (standard or vectored). Interrupts must be enabled by an ENB command, the interrupt must be masked on by an OCP command, and in vectored mode, a vector address must be assigned to the transmit and receive sections by OTA commands. Thereafter, the user proceeds as in programmed I/O except that it is not necessary to test the ready condition by an SKS. When the interface is ready to transmit or receive another character, it issues an interrupt request which results in an effective JST to an interrupt handling routine. The routine must contain the appropriate INA or OTA instruction to handle the current data byte and, in the case of vectored interrupts, clear the active interrupt (CAI instruction).

DMA/C Controlled Transfers: The program must set up address and range words in the appropriate memory locations, load the channel address register(s), and enable the channel. The interface then proceeds to request DMA/C cycles whenever the interface is ready for character transfer. The actual data transfers take place by memory cycle stealing, without program intervention. When a block transfer is complete, an end-of-range interrupt occurs. This enables the program to set up another block transfer to terminate operation, as appropriate. Two DMA/C channels are available to the ALC so that the transmit and receive sections can operate independtly, if desired. For details, see the DMA description in Section 5 or the DMC description in Section 6.

Device Address: The standard device address for the serial interface of SOC No. 1 is '04.

Table 5-1. PIO Instructions Used by Standard Terminals

Instruction	Application
OCP '0204	Enable Keyboard Interrupt
'0404	Disable Keyboard Interrupt
'0504	Enable Printer Interrupts
'0704	Disable Printer Interrupts
'1204	Enable Echoplex Input/Output
'1504	Set Interrupt Masks
'1604	Reset Interrupt Masks
'1704	Initialize
SKS '0004	Skip if Keyboard or Printer Ready
'0104	Skip if Interface Not Busy
'0204	Skip if Keyboard Not Interrupting
'0404	Skip if Keyboard and Printer Not Interrupting
'0504	Skip if Printer Not Interrupting
'0604	Skip if Transmit Buffer Ready for Character
'0704	Skip if Received Character Ready
INA '0004	Input Keyboard Character if Ready
'0404	Input Receive Control Register No. 1
'0504	" " " " " 2
'0604	Input Transmit Control Register No. 1
'0704	" " " " " 2
'1004	Clear A and Input Keyboard Character if Ready
'1104	Input Device ID

Table 5-1. (Cont)

Instruction	Application
INA '1404	Input Receive DMA/C Channel Address
'1504	" Transmit " " "
'1604	" Receive Interrupt Vector
'1704	" Transmit " "
OTA '0004	Output to Printer if Ready
'0404	Setup Receive Control Register No. 1
'0504	" " " " " 2
'0604	Setup Transmit Control Register No. 1
'0704	" " " " " 2
'1504	Setup DMA/C Channel Address for Printer Output
'1604	Setup Keyboard Interrupt Vector
'1704	Setup Printer Interrupt Vector

Table 5-2. Control Word Setup for Standard Terminals

Device	Control Word Settings	Notes
Teletype	RC1 '000027 TC1 '000027	Port 1, 110 Baud
	RC2 '074000 TC2 '074000	ALC mode, 2 Stop bits, 8-bit characters, parity disabled
CRT Terminal	RC1 '02RRRR TC1 '02TTTT	Port 3, RRRR = Receive Clock Rate, TTTT = Transmit Clock Rate
	RC2 '034000 TC2 '034000	ALC mode, 1 stop bit, 8-bit characters, parity disabled

NOTE: Transmit and Receive Baud Rates

Baud	Octal Value
75	'17
110	'27
150	'37
300	'76
600	'175
1200	'373
2400	'767
4800	'1756
9600	'3735

Programming Terminals on Processor Serial Interface

A basic serial interface is built into the central processor and is controlled by special instructions. By means of this device, the program can control the transmission of serial data on four output lines and can receive serial data simultaneously over four input lines. The program handles output by periodically changing the contents of a 4-bit output register in which each bit is connected to a separate output line; thus successive changes in the register contents produce bit-by-bit serial transmission over the lines. Data is received by sampling the input lines to pick up bit-by-bit serial input. The device operates on current loop or EIA standard levels and the lines are available at the rear edge connector of the processor board.

The program supplies data to and receives data from the lines via A register bits 13-16, where line 1 corresponds to bit 13. Input and output are handled by these two instructions:

OSI Output Serial Interface '000515

0	0	0	0	0	0	0	1	0	1	0	0	1	1	0	1
1	2	3	4	5	6	7	8	9	10	11	12	13	14	15	16

Load the contents of A bits 13-16 into the 4-bit buffer whose contents are held on the serial interface output lines. Bit 13 supplies the data for line 1.

ISI Input Serial Interface '000511

0	0	0	0	0	0	0	1	0	1	0	0	1	0	0	1
1	2	3	4	5	6	7	8	9	10	11	12	13	14	15	16

Read the contents of the serial interface input lines into A bits 13-16, with line 1 corresponding to bit 13.

The program is entirely responsible for all timing, for constructing characters with appropriate start and stop bits, and for stripping the data out of received characters. For output, the usual procedure is simply to change the signal on the output line for each bit in a serial transmission. The program determines character length and transmission frequency. Whenever any bit of the output register is changed, information previously given for the other lines must be repeated to keep the appropriate signals on them.

For input, both the frequency and character length must be know. In conventional data communications, an idle line is constantly marking (continuous 1s) and the beginning of an asynchronous character is indicated by a starting space (a 0 bit). The usual procedure is to

sample the line at five times the bit rate. Upon reading a 0 on a line that has been idle, the program should assume it has discovered only a possible space; if a 0 is still read at the next two sample times, it can be assumed that the line has a true space rather than a transient, and transmission has started. The program should then read the line at every fifth sample time so that reading is centered within each bit time. If a number of lines are operating, the program must keep track of them separately, i.e., the program must keep the read times centered on each line independently of the others.

SPECIAL FEATURES

CRT Terminal Control Characters

The following characters control the CRT display cursor and other special functions (VISTAR only, not VISTAR-GT).

Code	Function
'231	Cursor Right
'232	Cursor Left
'234	Cursor Up
'235	Cursor Down
'213	Erase Line
'214	Erase Page
'236	Transmit Page
'216	Transmit Line

Paper Tape Control Characters

The ASR low speed paper tape reader can be started and stopped under program control by the use of the following special characters:

Function	Keyboard Character	ASCII Code (Octal)
Start Tape Reader	CTRL Q	205
Stop Tape Reader	CTRL S	215

Punching is enabled manually by the PUNCH ON button; when it is depressed, all output characters are punched as well as printed. (Some codes are punched but do not print.)

AMLC PROGRAMMING

See the AMLC User Guide

SECTION 6

TEST AND MAINTENANCE

This section describes how to use standard Prime diagnostic tests used for factory and on-site checkout of this controller. Tests are supplied in the T&M UFD of master disk Volume 1 or on paper tapes:

Filename in T&M UFD	Tests	Paper Tape	Low	High	Start
TTYT2	Serial Interface Using SOC Port No. 1	SLT0783.004	60	11313	1000

LOADING TEST PROGRAMS

To load tests under DOS, attach to the T&M UFD and RESUME the test. (Files in T&M are binary run files.) In a paper tape system, use APL to load the self-loading tape.

NOTE

Test programs are not intended to run under DOS/VM.

TERMINAL TEST PROGRAM

Standard asynchronous device controller test TTYT2 may be applied to any type of terminal. Following is a brief description of its functions and an example of the dialog at a terminal. If errors are encountered the CPU halts; to diagnose the problem, consult the listing and interpret the comments at the halt location.

Test Selection

TTYT2 performs several functional tests of the SOC serial interface both in diagnostic mode and in normal mode using the terminal as an input/output device. The tests are selected by CPU sense switch settings made before the test is started:

SS6	Set to ignore machine check
SS7	Set for ASR 35, reset for 33
SS8	Bypass function test if set
SS9	Bypass page printer test if set
SS10	Bypass keyboard input test if set
SS11	Bypass answerback drum test if set
SS12	Bypass null character test if set
SS13	Bypass punch test if set
SS14	Bypass reader test if set
SS15	Bypass device ID print routine if set

Function Test Routine: Tests the interface to ensure that the instruction subset is operational. After initial tests, a baud rate test is performed. The test data pattern (0-377) for each baud rate is displayed. This is repeated once. The program also checks all normal mode instructions and functions.

Page Printer: Prints up to 70 lines (70 columns/line) of rotating patterns, and then prints a full line for every character printed in the first line of the rotating pattern. Each test may be terminated by depressing any data switch.

Keyboard Input: Waits for a line to be typed at the keyboard, followed by a .CR., and then prints a duplicate of the line plus a character count.

In addition, a full duplex keyboard test is performed in which each character that the operator types in is echoed back one character at a time via software. The output lags the input by one character to demonstrate full duplex operation. A carriage return terminates the keyboard input.

Answer Back Drum Test: An output code - WRU (205) - is sent to the ASR; the program then counts and prints the number of interrupts received. Acceptable responses are 0 (option disabled) or 20.

Null Character Test: A data string of null characters is output to verify that they do not print.

Punch Test: Punches a data string of X and Z patterns to check out all punch and reader channels. Following this is a stop code character set and an identification character for ASR-33 or 35. An incrementing binary pattern is then punched under interrupt control.

If the device is an ASR-33, the program requests the operator to turn on the punch. At the end of the data patterns, some trailer will be punched along with a message to turn off the punch (for 33 only). This message is not part of the test data.

Reader Test: Tests the tape generated by the punch test. On entry, the program requests the operator to load the test tape and press start. Set the reader controls as follows:

ASR-33	Free/stop/start switch on stop
ASR-35	Free/stop/run switch on run, also set mode switch to T.

As in the punch routine, this test is under interrupt control. Data read is placed in a buffer and is checked after the entire block has been input. Error information is presented prior to reading the next data string. Errors detected as part of the stop code test cause a halt as soon as detected.

Device ID Print Routine: Tests all possible device addresses and prints the code for those that respond.

Operating Procedures

1. Load TTYT2.

2. Make sure the terminal power is on. A Teletype should be in LINE mode.

3. Master clear the CPU and select tests by the sense switch settings previously described.

4. If the SOC device address is other than the standard '04, set the new value in the A Register before starting tests.

5. Press CPU START to begin tests. Respond to the terminal dialog to enter test strings and interpret results. The test asks two questions before starting - TEST SLC? (test synchronous capability) and TEST DMA? Respond Y to perform test, N if not.

Example

Following is an example of a TTYT2 test run with reader and punch tests suppressed. User input is underlined.

```
TEST SLC ?
N

TEST DMA ?
Y
TESTING DMA

END FUNCTION TEST DEVICE ADDRESS 000004

KEYBOARD INPUT
!QAZXSW23EDCVFR45TGBNHY67UJM,KI890L./;P0:-
!QAZXSW23EDCVFR45TGBNHY67UJM,KI890L./;P0:-
CHARACTER COUNT =      42
FULL DPLX KEYBOARD TEST
!QAZ2WXSH
!QAZ2WXSH
CHARACTER COUNT =       9

TEST FOR ANSWER BACK DRUM
CHARACTER COUNT =       0
NULL TEST-NOTHING SHOULD PRINT

DONE
DEVICE 000001 HAS ID 000001
DEVICE 000004 HAS ID 000104
DEVICE 000020 HAS ID 000120
DEVICE 000030 HAS ID 000101
DEVICE 000031 HAS ID 000102


PAGE PRINTER TEST

 !"#$%&'()*+,-./0123456789:;<=>?@ABCDEFGHIJ

!!!!!!!!!!!
INITIAL SSW'S WERE  000014
MAKE NEW SELECTION

END TTYT2 REV 05
```

APPENDIX A

Teletype Strapping

The following procedure indicates the internal ASR33 strapping required for 20MA full duplex operation with 8th bit marking:

1. Reference Figure A-1 and move the purple wire from terminal 8 to terminal 9. This converts to a 20MA current loop.

2. Reference Figure A-1 and move the white-blue wire from terminal 4 to terminal 5. Also, move the brown-yellow wire from terminal 3 to terminal 5. This step converts from half to full duplex.

3. Reference Figure A-1 and install CBL 0603 as indicated.

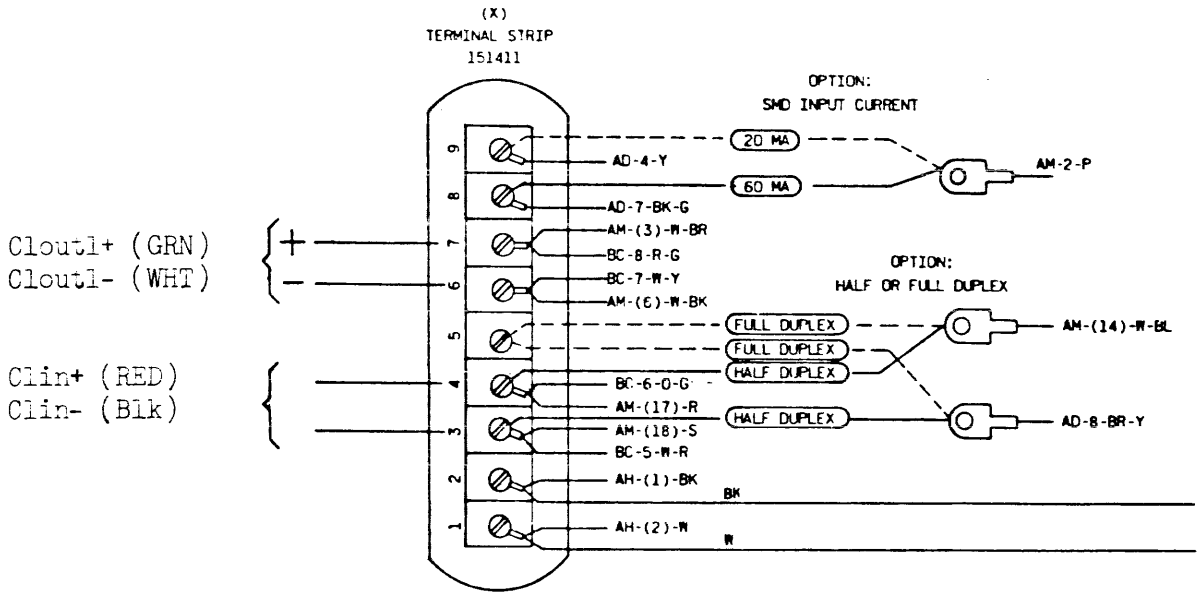

Figure A-1. Teletype Strapping

4. Reference Figure A-2 and the keyboard wiring options table and configure for 8th bit always marking.

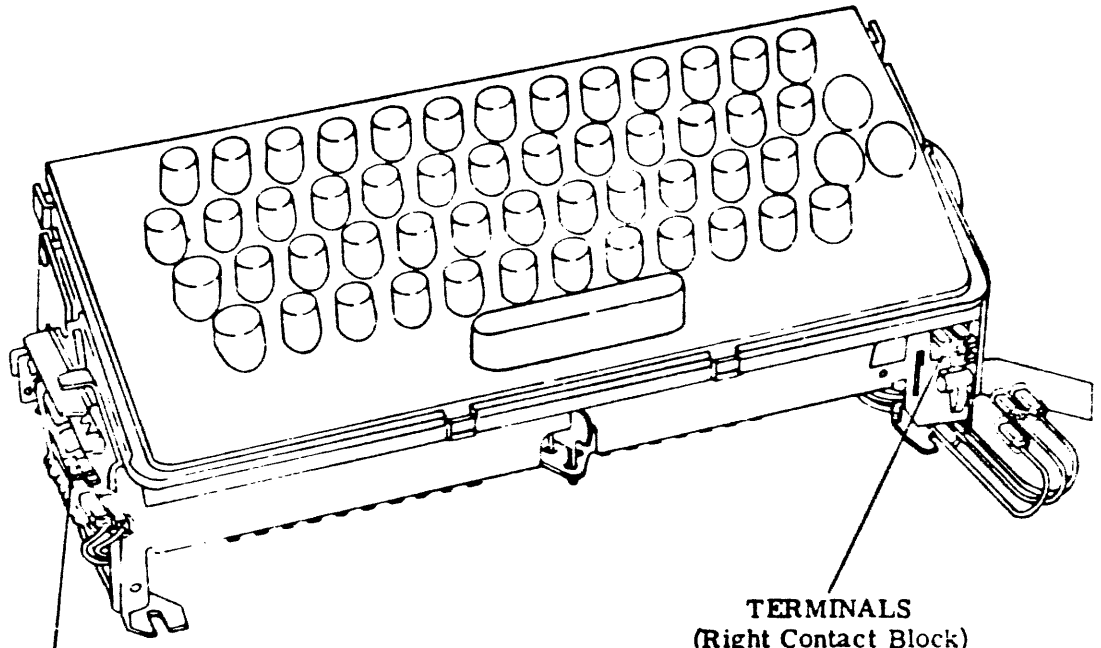

Note: Push the terminals on the contacts with long nose pliers. It should be possible to install the parity options without removing the keyboard.

Figure A-2 - Location of Terminals on Keyboard for Parity Options

KEYBOARD WIRING OPTIONS TABLE

OPTION	LEAD 1 Left Contact Block Color: Red-Green	LEAD 2 Left Contact Block Color: Green	LEAD 3 Right Contact Block Color: Green	LEAD 4 Right Contact Block Color: White-Slate
8th bit Always mark	OFF	ON	ON	ON

Note 1: Tape and store unused leads.

5. If the Teletype Punch unit is to be used for punching tapes under computer control, it is necessary to remove the clips installed in Slots A-0 and A-8 to enable automatic punch on and off control. Refer to Figure A-3 and Section 574-125-100TC of the teletype manual for location of clips A-0 and A-8.

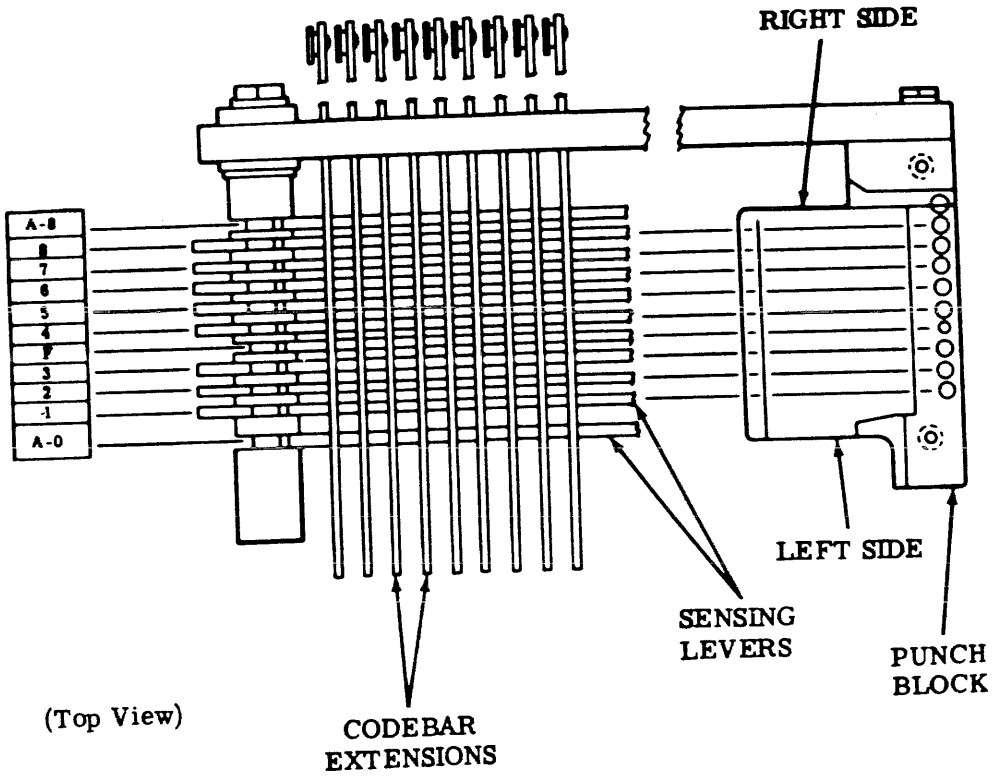

Figure A-3 Sensing Levers Slot Assignment

APPENDIX B

USING OPTIONAL VISTAR TERMINAL

The Infoton VISTAR terminal is available at extra cost instead of the standard VISTAR-GT described in this user guide. The VISTAR has independent receive and transmit rates, an automatic carriage return feature, and cursor control and other screen control keys. In addition, the VISTAR provides roll/page or block/character modes. As a result, setup and operation for the VISTAR differ from the VISTAR-GT.

Rear Switch Panel Setup

The switch and connector panel at the rear of the display (Figure B-1) must be set up to match the type of interface and the software requirements as follows:

Switch	Standard Prime Setting	
XMIT RATE	DOS/VM User Terminals connected to CPU Serial I/O Ports: 75. All others: REC (same as receive rate).	
PARITY	MARK	
FDX/HDX	FDX	
CHAR LENGTH	11 for 75 or 110 Baud; 10 for 150 Baud or higher.	
AUTO CR	Optional. If left OFF, lines longer than 80 characters run off the end of the screen. If ON, an automatic CR-LF is inserted after the 80th character and printing continues on the next line.	
RECEIVE RATE	Depends on terminal application:	
	System terminal connected to SOC or Option A:	110*
	DOS/VM user terminal connected to CPU Serial I/O Ports:	300*
	DOS/VM user terminal connected to AMLC:	300 or 1200 (depends on how DOS/VM is configured)

* See Appendix C for alternatives.

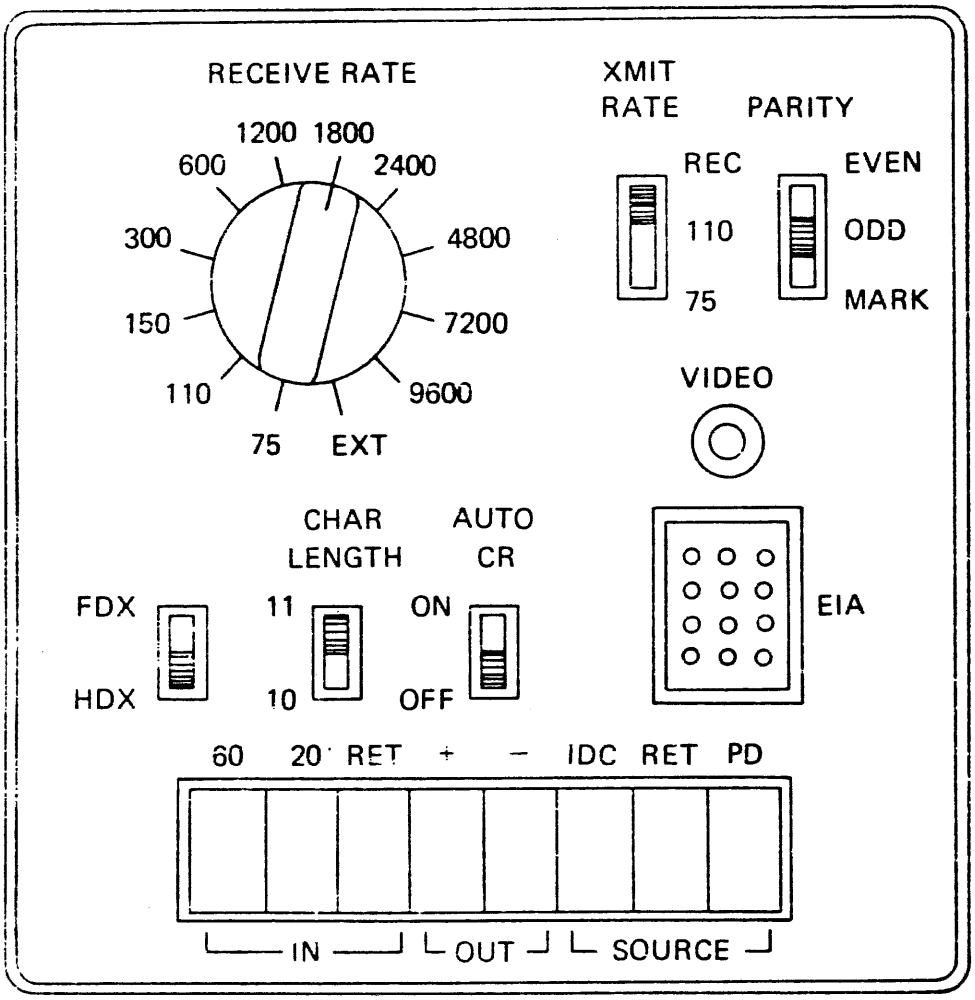

Figure B-1. VISTAR Rear Switch Panel

Initial Operation and Checkout

After the CRT terminal is completely installed and cabling is connected (as described in Section 3), perform the following initial operation and checkout:

1. Set the LOCAL/LINE switch at LOCAL and POWER switch ON. The POWER switch should illuminate and approximately 30 seconds later the blinking cursor should be visible.

2. Adjust the INTENSITY control for viewing comfort.

3. Adjust the HORIZONTAL and VERTICAL controls for a stable display.

4. Type a message and make sure it is displayed correctly on the screen. Use the ERASE PAGE and ERASE LINE functions. Position the cursor using the control buttons at the right of the keyboard.

Normal Operation

For operation with standard Prime software, the CRT terminal is intended to operate in character and roll modes. Make sure the controls are set up as follows before beginning operation:

PRINT/XMIT	PRINT
BLOCK/CHAR	CHAR
ROLL/PAGE	ROLL
LINE/LOCAL	LINE
POWER	ON

Thereafter, the terminal is operated like any teleprinter. The Erase Page, Erase Line and cursor control buttons both affect the display screen and generate character codes which are accepted and stored as characters by the Text Editor or other text processing software. Thus, these codes can be made a part of a message for later display; they have the same effect on output as when the keys are struck.

APPENDIX C

SOFTWARE ALTERATIONS TO CHANGE CRT TERMINAL OPERATING SPEEDS

In certain system configurations, when CRT terminals are substituted for Teletypes as system or time-share user terminals, they must operate at the Teletype rate (110 Baud). However, by altering system software, it is possible in some cases to select different operating speeds.

NOTE

DOS and DOS/VM will not, even with altered control words, support system terminals requiring special delay and/or feedback information (e.g., 30 cps hard-copy devices).

SINGLE-USER DOS TERMINAL

The terminal in a single-user DOS system is connected to SOC (or Option A) serial data port no. 1 and is set up by the system software to run at 110 Baud. A Teletype may be replaced by a CRT terminal, but to operate at higher speeds certain locations in DOS and the BOOT must be altered. To do this, first set the CRT to operate at 110 Baud, start operation under DOS, and make the following changes:

NOTE

If the terminal does not operate at 110 Baud, BOOT and DOS must be altered from the control panel. See the end of this appendix for the procedure.

1. Attach to CMDNC0, RESTore BOOT, and do a PM. The default parameters (at Rev. 7) are:

   3011 3631 31721 31723 110 27 74000

   The last three parameters are the default values for the serial transceiver control words, as follows:

Default Parameter	Function
110	Option A Control Word
27	SOC Port Sel & Speed Control Word
74000	SOC Character Definition Control Word

2. Determine the control words required to specify the desired data rate and character format and SAVE BOOT using these values as parameters. (The transmit and receive control words are given the same values by BOOT.) The correct control words for running other than a 10-character-per-second terminal on port 1 can be obtained by referencing the Prime System Reference Manual for the Option A Controller or the System Option Controller User Guide. For typical values, see Table C-1.

3. RESTore the appropriate DOS run file as follows:

```
OK: A DOS

OK: REST *DOS32 (or desired version)

OK: PM

    7000-17777 71000 60000 0 0 20000
```

The run files are in a special SAVE format to facilitate loading by BOOT. When they are RESTored, they load in the same area (7000-17777) below DOS. The fourth parameter is an offset value used by BOOT to determine the final loading area. Thus, to change the serial device control words, it is only necessary to make patches in the RESTored image and SAVE it. When it is booted in, the control words are offset to the proper run locations.

4. Use TAP or the control panel to alter the following locations, as appropriate:

	Location (Rev.7)	Function
10247	10247	Option A Control Word
10250	10250	SOC Port Sel & Speed Control Word
10251	10251	SOC Character Definition Control Word

5. Save the patched DOS file using the filename from which it was restored. Use the same parameters obtained in PM above.

6. Change the operating speed of the terminal to the desired value.

7. BOOT DOS in again. The terminal should then operate correctly at the higher speed.

Table C-1. Serial Interface Control Word Values (Port 1)

Speed (Baud)	Option A Control Word	SOC Port Sel & Speed	SOC Character Definition
110	110	27	74000 74004 REV 15
300	1010	76	34000
1200	2010	373	34000
9600	3410	3735	34000

DOS/VM SYSTEM TERMINAL

The system terminal in a DOS/VM system also runs from SOC or Option A Port No. 1 at 110 Baud. A CRT can be installed and set up at higher speeds as follows:

1. Start DOS and make the changes described above for a single-user DOS installation.

2. Attach to the DVBIN UFD and RESTore the desired run file: TS330, TS300, or TSAMLC, according to the equipment configuration. Start TAP and patch the following locations:

Absolute Location (Rev. 7)	Symbolic Location	Function
33555	ASRCOM+3	Option A Control Word
33556	ASRCOM+4	SOC Port Sel & Speed Control Word
33557	ASRCOM+5	SOC Character Definition Control Word
14115	VQVTM+3	Rate at which system terminal driver ASRDIM is called. (Set to lower number.)

3. SAVE the patched version and transfer it to the CMDNC0 UFD under the name DOSVM.

USER TERMINALS IN 4-USER DOS/VM SYSTEM

DOS/VM user terminals running from the CPU serial I/O ports of a Prime 300 can run at one of two speed combinations, depending on the DOS/VM run file and system configuration.

DOS/VM Run File	Required Option A Clock	Terminal Speed (Baud) Input	Output	Terminal Type
TS330	330 Hz	110	110	Teletype or VISTAR/GT
TS300	300 Hz	75	300	VISTAR

Note that only a VISTAR CRT terminal can run at different input and output rates. (It is an extra-cost option.)

ALTERING DOS FROM NON-110-BAUD TERMINAL

If the terminal cannot be operated at 110 Baud, some changes must be made at the control panel, as follows:

1. Go through the usual procedure for BOOTing DOS from the control panel. (See DOS-DOS/VM manual for details.) Because the terminal is set for the wrong speed, the prompt message will be garbled.

2. From the control panel, patch the following BOOT locations, as appropriate:

   '1004 Option A Control Word

   '1005 SOC Port Select and Speed Control Word

   '1006 SOC Character Definition Control Word

   (See Table C-1 for typical values.)

3. Master Clear and press START to restart BOOT at location '1000; DOS will be booted in and part of the message (the DOS version) will be printed. However, because DOS itself is still set for 110 Baud, the rest of the message will be garbled and DOS will hang.

4. At the control panel, patch the following DOS locations, as appropriate:

Location (Rev. 7)	Function
XX247	Option A Control Word
XX250	SOC Port Sel and Speed Control Word
XX251	SOC Character Definition Control Word

   (XX=30 for *DOS16, 50 for *DOS24, or 70 for *DOS32.)

   This now permits the terminal to communicate with DOS in main memory. However, the resident version that is restored by BOOT must be altered also so that this process need not be repeated.

5. Restart DOS at location XX000 and RESTore the appropriate DOS run file as follows:

```
A DOS

REST *DOS32 (or desired version)

PM

7000-17777 71000 60000  0  0  2000
```

The run files are in a special SAVE format to facilitate loading the BOOT.

When they are RESTored, they all load in the same area (7000-17777) below DOS. The fourth parameter is an offset value used by BOOT to determine the final loading area. Thus, to change the serial device control words, it is only necessary to make patches in the RESTored image and SAVE it. When it is booted in, the control words are offset to the proper run locations.

6. Use TAP or the control panel to alter the following locations, as appropriate:

Location (Rev. 7)	Function
10247	Option A Control Word
10250	SOC Port Sel & Speed Control Word
10251	SOC Character Definition Control Word

   (See Table C-1 for typical values.)

7. Save the patched DOS file under the same name from which it was restored. Use the same parameters obtained in the PM above.

CHANGING AMLC LINE CHARACTERISTICS

In a DOS/VM system, the number of lines driven by AMLC and the characteristics of each line can be altered by changes to the AMLC configuration tables within DOS/VM. These changes should be done only by a user familiar with DOS/VM. A listing should be available for reference.

AMLC Data Base

The AMLC DIM is table-controlled. It has a flexible data base which allows relatively simple reconfiguration at run-time (DOS/VM startup time).

```
* -----------
* LINE TABLES
* -----------
*    LWORD   DEFINES:
*          BIT   1            HALF-DUPLEX
*          BITS 11-16         INTERNAL BUFFER NUMBER (1-63)
*
*    LGROUP  DEFINES GROUP INDEX OF THIS LINE
*    LCONF   DEFINES LINE-CONFIGURATION AS PER AMLC SPEC
*    IADR    ROUTINE TO PROCESS INPUT FOR THIS LINE
*    OADR    ROUTINE TO OBTAIN OUTPUT FOR THIS LINE
*
* ------------
* GROUP TABLES
* ------------
*
* A 'GROUP' IS A COLLECTION OF CONSECUTIVE LINES PROCESSED TOGETHER.
*    THERE IS ONE CHARACTER-TIME INTERRUPT PER GROUP.
*
*    GNL     NUMBER OF LINES IN GROUP
*    GLN0    FIRST LINE NUMBER IN GROUP
*    GFLAG   DEFINES:
*          BIT   1            PROCESS INPUT WHEN THIS GROUP-CLOCK INTERRUPTS
*
* ------------
* B REGISTER                  B12+B13 = AMLC WITH,
* ------------                 0   0     8  LINES
*                              0   1    16 LINES
*                              1   0    24 LINES
*                              1   1    32 LINES
*
```

Comments on AMLC Listing

LWORD

The "internal buffer number" is used by the TTYIN/TTYOUT routines to service a user buffer pair; in other words, this links a user number to an AMLC line.

LGROUP

Links a line to a group.

LCONF

See the line configuration word format.

IADR, OADR

Contains the addresses of routines which handle line I/O. Most lines are serviced by TTYIN & TTYOUT. Note that CARDIN, CRDOUT do service one line. If a card reader is not used, CARDIN, CRDOUT can be used to fetch data from an asynchronous line by assigning the card reader (CRSER) and switching the ASR port to port 3 and doing INA '1004 to fetch data. To switch the ASR, use the DOS/VM ASR3 command or use OTA '0104.

GROUP TABLES

The group tables control AMLC output and input. At initialization the last line in each group is enabled for character time interrupts. At each char-time interrupt, all of the lines in the group for which the interrupt occurred are scanned and given output if needed and ready. In addition, the AMLC input buffers are swept for all lines in all groups at the tinerrupt if bit 1 of the GFLAG word for the interrupting group is set.

The AMLC source must be altered to create new groups. A group is intended to contain all lines which operate at a given line speed. Lines must be consecutive within a group.

Individual lines within a group other than the last line may be set to run at different rates; the frequency of character transmission will reamin the same as the rate for the last line. If a line is made faster, no increase in through-put will occur. If a line is made slower, some inefficiency will be generated because the line will be tested at a higher rate than is necessary.

Changing Tables at Run-time

The best way is to restore DOS/VM, make changes, master clear, hit "start" twice and see if the changes work. If the changes stand the test of time, the DOS/VM run file may be restored, changed and re-saved. This provides a permanently changed system.

Changing Terminal Speeds

The current AMLC output interrupt overhead is approximately 250 μsec. for a single line. At 9600 baud (1 output interrupt per millisec.), the AMLC overhead becomes 25%. At 1200 baud, the overhead is 3%. Notice that it is possible to seriously degrade the performance of DOS/VM by using too high an AMLC transfer rate.

110 Baud Terminals on the AMLC

There is an automatic 4-5 character delay of the echo character in full-duplex mode for all transmissions. This becomes annoying on 10 cps terminals.

Solution 1 - Run in half-duplex mode with local print. This means that one gets garbled output if typing while system is transmitting.

Solution 2 - Put terminals on the bit-banger. This will give 4 additional users. See section on enabling the bit-banger.

Reassigning the Supervisor Terminal

The supervisor terminal may be assigned to one of the AMLC ports by changing the corresponding LWORD entry to the integer 1. The ASRDIM call in the TMAIN module just before CLK4E must be replaced with a "NOP" instruction. This simple solution removes the ability to issue the USRASR command.

a) Output Line Configuration

OTA '0154

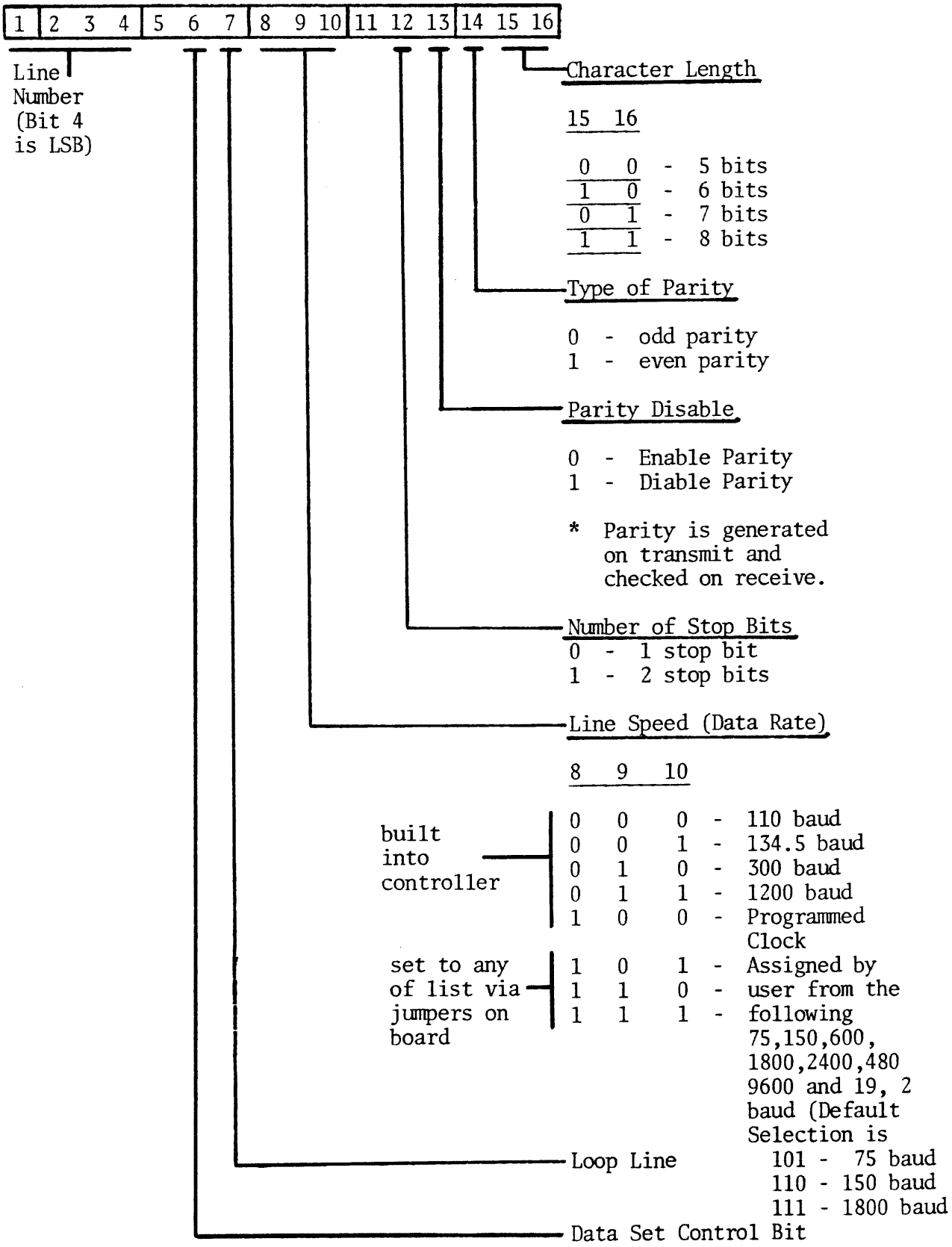

Bit Banger Configuration

In module TMAIN just before location labelled "CLK1" at the code:

```
        IFN     BB$
        ELSE
→       NOP
        ENDC
```

The statement marked by the arrow is to be replaced by a JST BBDIM statement.

This statement may be patched or DOS/VM may be reloaded with a new TMAIN module which has been reassembled with bit 16 of the B-register set (in addition to all other control bits).

b) The users serviced by the bit-banger are 2, 3, 4, 5. These are defined by the four buffer numbers labelled "bufn" in module BBDIM. Note that the AMLC tables and the BIT BANGER tables must not use the same buffer numbers.

c) The terminals must be cabled to the CPU serial interface port.

d) In order to use the bit banger in this way, the P300 CPU must have Rev. G or higher microcode.

APPENDIX D

EIA CABLE STRAPPING FOR ALTERNATE TERMINALS

Many EIA-interface hard copy and video terminals are plug-compatible with a Teletype or CRT Terminal. However, certain terminals require certain pins of the standard EIA connector on the Prime side to be strapped:

Terminal	Strap Pins
Tektronix 4010	None (Prime EIA Connector OK)
Hazeltine 2000	5-6-8-12-20
Texas Instrument Silent 700	5-6-8-20

INDEX

CABLING 3-11
CONFIGURATIONS, TERMINALS 1-3
CONTROL CHARACTERS, CRT TERMINALS 5-6
CONTROL CHARACTERS, PAPER TAPE 5-6
CONTROL WORD SETUP FOR STANDARD TERMINALS 5-4
CRT TERMINAL OPERATION 2-1
CRT TERMINAL OPERATING SPEEDS, CHANGING C-1
CRT TERMINALS - DESCRIPTION 1-2
CURRENT LOOP INTERFACE WIRING, CRT TERMINAL 3-3
DOCUMENTS, REFERENCE 1-1
DOS & DOS/VM COMMANDS
ELECTRICAL & ENVIRONMENTAL CHARACTERISTICS 3-2
FORTRAN FORMATTED I/O 4-1
INITIAL OPERATION & CHECKOUT, CRT TERMINAL 3-6
INITIAL OPERATION & CHECKOUT, CRT TERMINAL 3-10
INSTALLATION, CRT TERMINAL 3-1
INSTALLATION, TELETYPE 3-6
IOCS ROUTINES 4-1
LOW SPEED TAPE UNIT OPERATION 2-1
OPERATION 2-1
PHYSICAL CHARACTERISTICS, TERMINALS 3-2
PIO INSTRUCTIONS USED BY STANDARD TERMINALS 5-2
PROGRAMMING, ASSEMBLY LANGUAGE 5-1
PROGRAMMING, SYSTEM LEVEL 4-1
REAR SWITCH PANEL SETUP, CRT TERMINAL 3-3
SCOPE OF HANDBOOK 1-1
SERIAL INTERFACE, PROGRAMMING TERMINALS ON 5-5
SITE PLANNING 3-1
SOC PROGRAMMING TECHNIQUES FOR TERMINALS 5-1
SPECIFICATIONS, CRT TERMINAL 1-5
SPECIFICATIONS, TELETYPES 1-6
STRAPPING, EIA CABLE, FOR ALTERNATE TERMINALS D-1
STRAPPING, TELETYPE A-1
TELETYPE OPERATION 2-1
TELETYPES - DESCRIPTION 1-2
TERMINAL CONFIGURATIONS 1-3
TERMINALS, MODELS OF 1-2
TEST AND MAINTENANCE 6-1
TEST PROGRAM, TERMINALS 6-1
VENDOR MANUALS 1-1
VISTAR TERMINAL, OPTIONAL, USING B-1