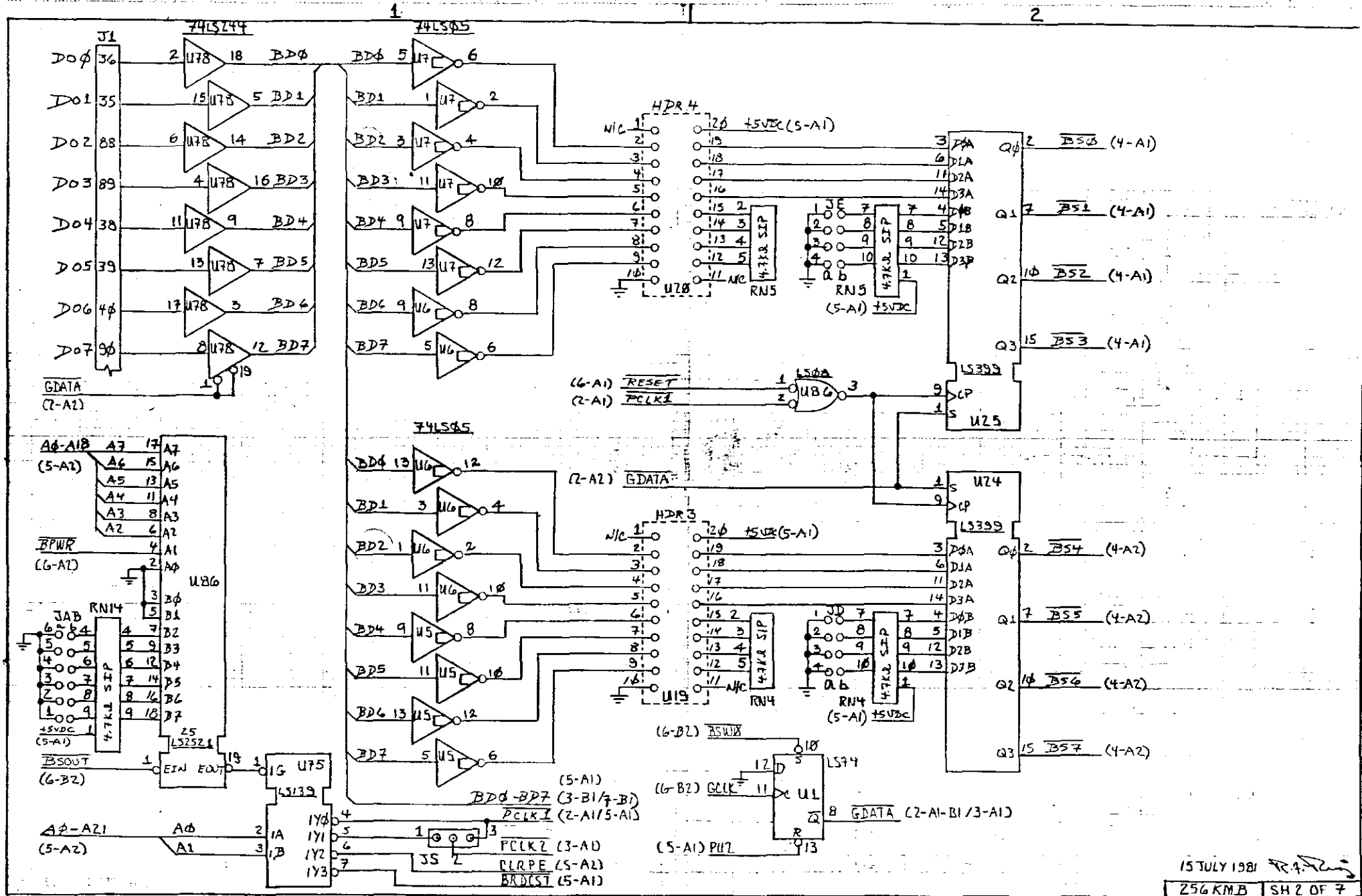

J1
74LS244
74LS05
HDR4
HDR3
U20
U19
RN5
RN4
U25
U24
LS399
LS08
U86
RN14
LS2521
U75
LS139
LS74
U1
JS
JAB
GDATA (2-A2)
A0-A18 (5-A2)
BPWR (6-A2)
BSOUT (6-B2)
A0-A21 (5-A2)
BD0-BD7 (3-B1/7-B1)
PCLK1 (2-A1/5-A1)
PCLK2 (3-A1)
CLRPE (5-A2)
BRDCST (5-A1)
(6-A1) RESET
(2-A1) PCLK1
(2-A2) GDATA
(6-B2) BSW0
(6-B2) GCLK
(5-A1) PU2
GDATA (2-A1-B1/3-A1)
BS0 (4-A1)
BS1 (4-A1)
BS2 (4-A1)
BS3 (4-A1)
BS4 (4-A2)
BS5 (4-A2)
BS6 (4-A2)
BS7 (4-A2)
+5VDC (5-A1)
4.7KΩ SIP
15 JULY 1981
256 KMB
SH 2 OF 7

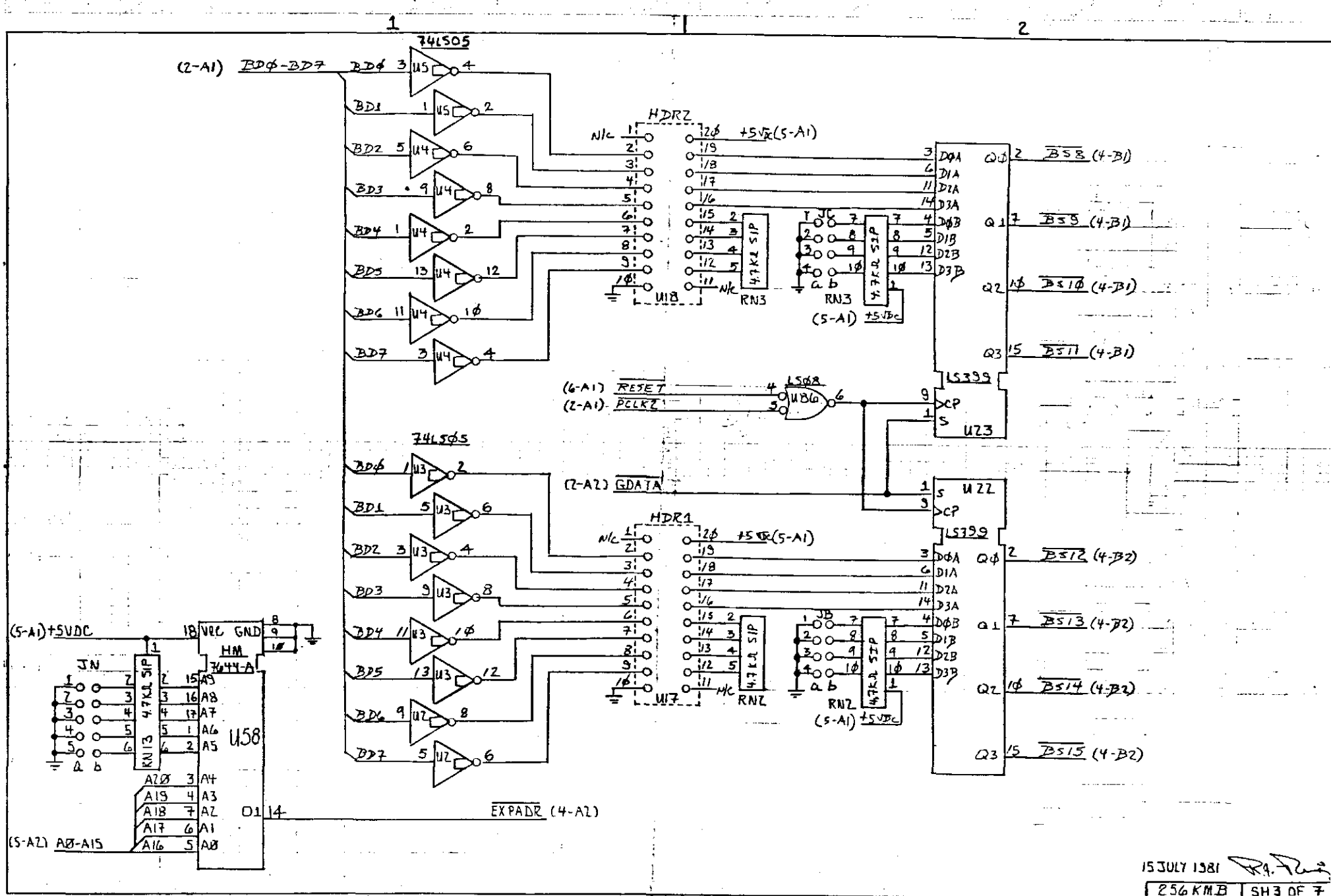

15 JULY 1981

256KMB | SH 3 OF 7

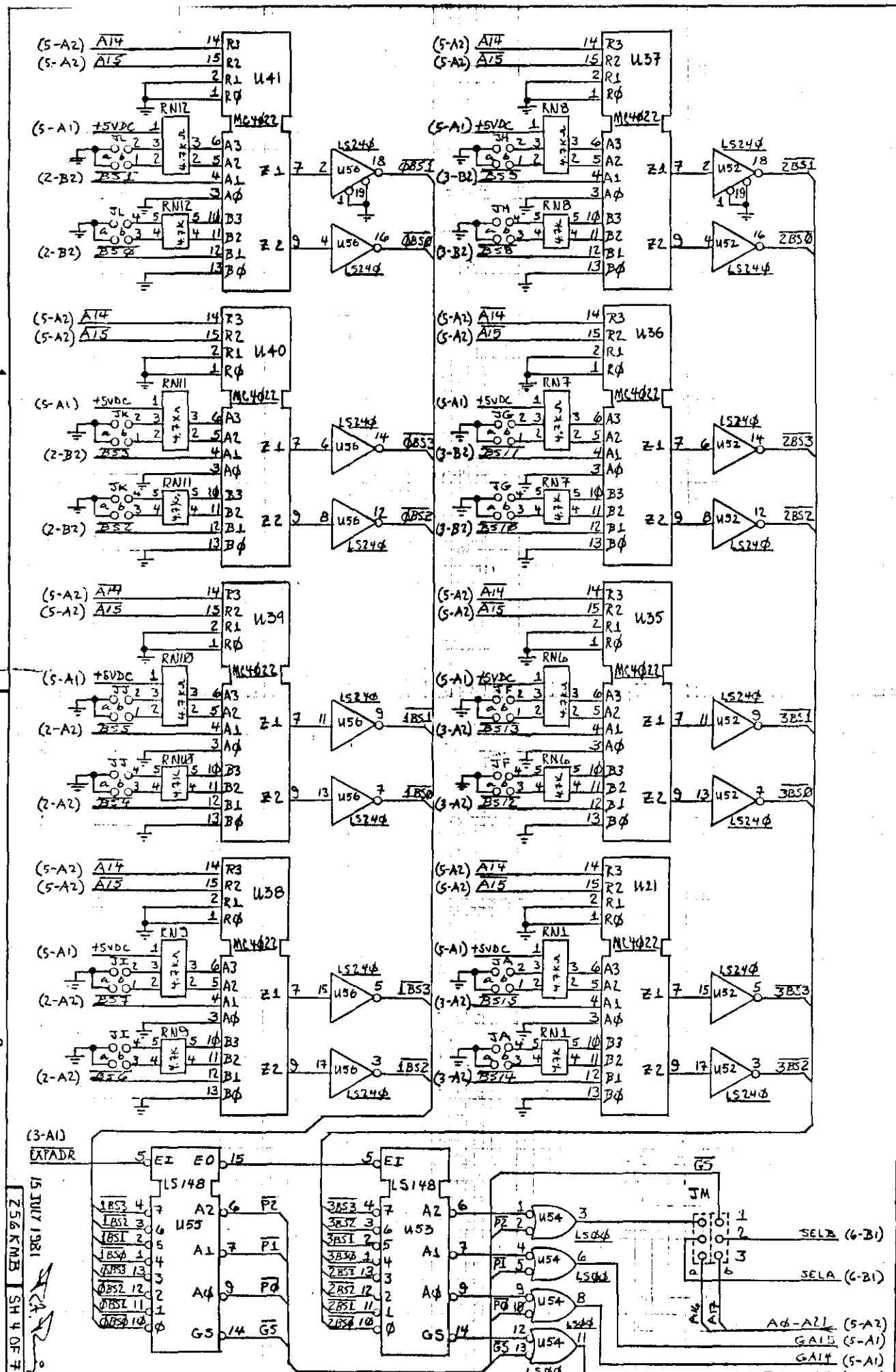
U41
U37
U40
U36
U39
U35
U38
U21
U55
U53
MC4022
LS240
LS148
LS00
(5-A2) A14
(5-A2) A15
(5-A1) +5VDC
(2-B2) BS1
(2-B2) BS0
(3-B2) BS5
(3-B2) BS8
(2-B2) BS3
(2-B2) BS2
(3-B2) BS11
(3-B2) BS10
(2-A2) BS5
(2-A2) BS4
(3-A2) BS13
(3-A2) BS12
(2-A2) BS7
(2-A2) BS6
(3-A2) BS15
(3-A2) BS14
(3-A1) EXPADR
SELB (6-B1)
SELA (6-B1)
A0-A21 (5-A2)
GA15 (5-A1)
GA14 (5-A1)
15 JULY 1981
256 KMB
SH 4 OF 7

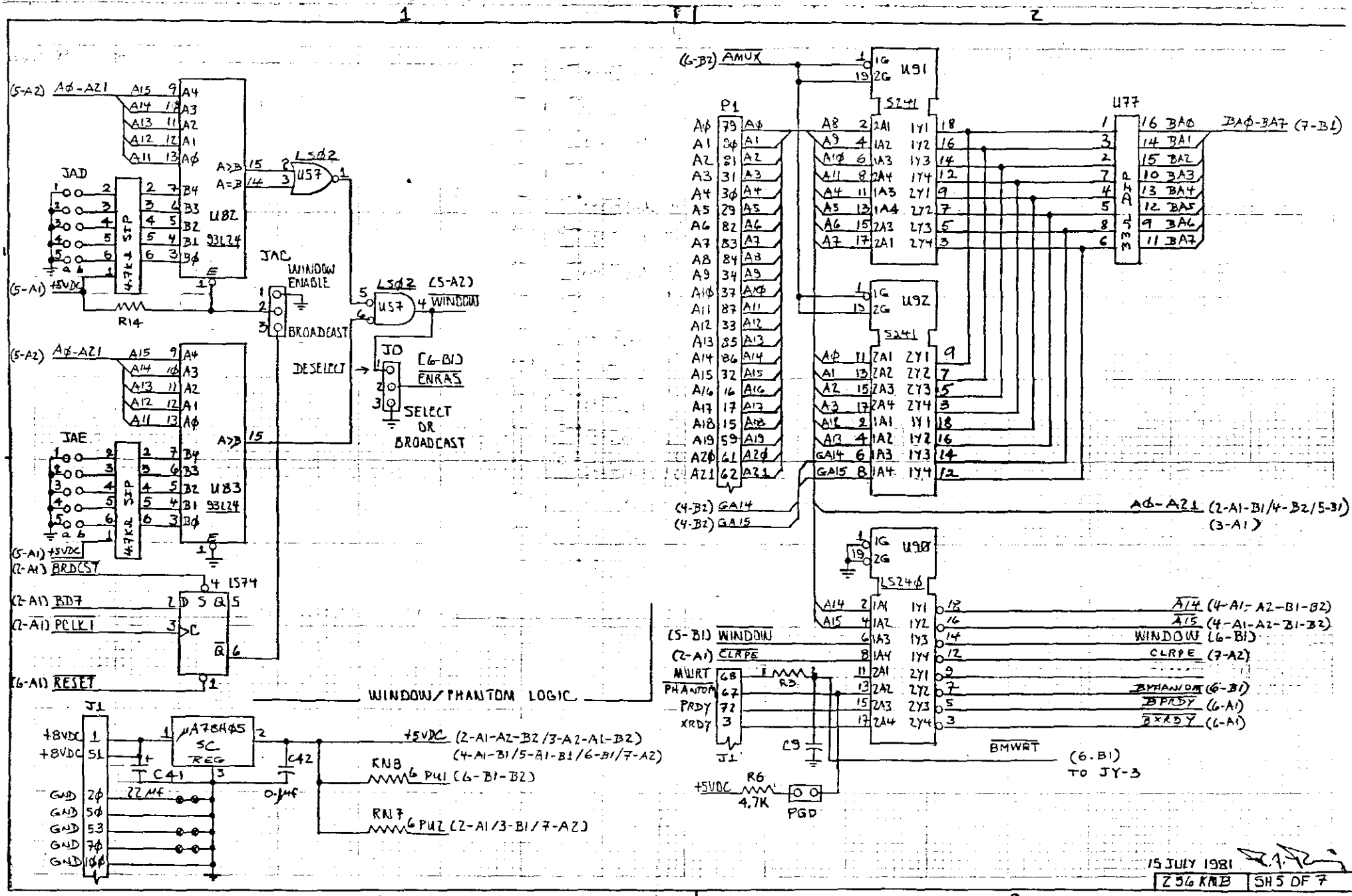

(5-A2) AØ-A21
JAD
U82
93L24
4.7KΩ SIP
(5-A1) +5VDC
R14
JAC
WINDOW ENABLE
BROADCAST
LSØ2
U57
(5-A2) WINDOW
JD
(6-B1) ENRAS
DESELECT
SELECT OR BROADCAST
JAE
U83
(2-A1) BRDCST
LS74
(2-A1) BD7
(2-A1) PCLK1
(6-A1) RESET
WINDOW/PHANTOM LOGIC
J1
+8VDC
GND
μA78HØ5 SC REG
C41
22μF
C42
0.1μF
+5VDC (2-A1-A2-B2/3-A2-A1-B2)
(4-A1-B1/5-A1-B1/6-B1/7-A2)
RN8 PU1 (6-B1-B2)
RN7 PU2 (2-A1/3-B1/7-A2)
(6-B2) AMUX
U91
S241
P1
U92
U77
33Ω DIP
BAØ-BA7 (7-B1)
(4-B2) GA14
(4-B2) GA15
AØ-A21 (2-A1-B1/4-B2/5-B1)
(3-A1)
U90
LS24Ø
(5-B1) WINDOW
(2-A1) CLRPE
MWRT
PHANTOM
PRDY
XRDY
R3
C9
R6
4.7K
PGD
BMWRT
(6-B1) TO JY-3
A14 (4-A1-A2-B1-B2)
A15 (4-A1-A2-B1-B2)
WINDOW (6-B1)
CLRPE (7-A2)
BPHANTOM (6-B1)
BPRDY (6-A1)
BXRDY (6-A1)
15 JULY 1981
Z56 KMB
SH 5 OF 7

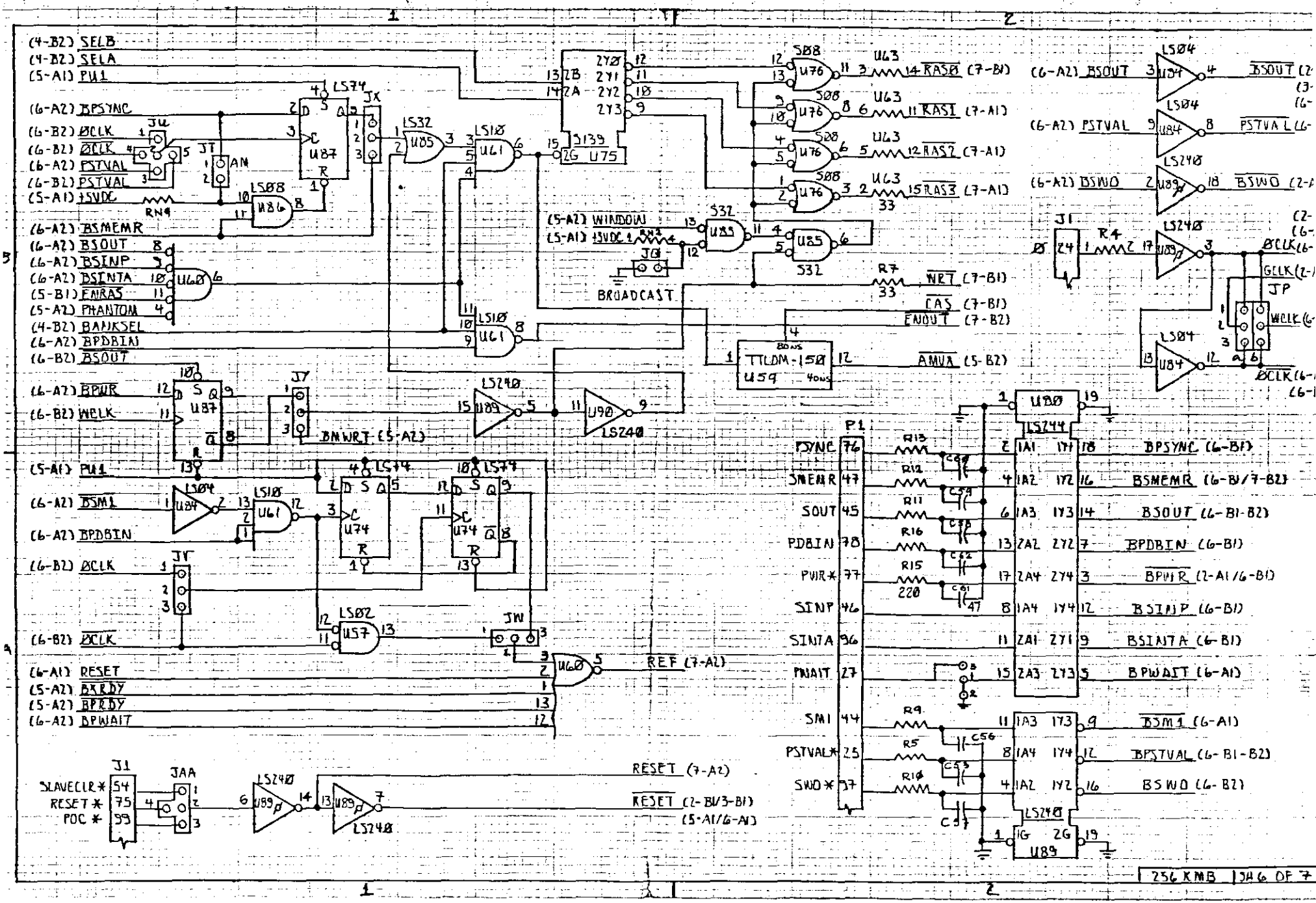
(4-B2) SELB
(4-B2) SELA
(5-A1) PU1
(6-A2) BPSYNC
(6-B2) BCLK
(6-B2) BCLK
(6-A2) PSTVAL
(6-B2) PSTVAL
(5-A1) +5VDC
RN4
(6-A2) BSMEMR
(6-A2) BSOUT
(6-A2) BSINP
(6-A2) BSINTA
(5-B1) ENRAS
(5-A2) PHANTOM
(4-B2) BANKSEL
(6-A2) BPDBIN
(6-B2) BSOUT
(6-A7) BPWR
(6-B2) WCLK
(5-A1) PU1
(6-A2) BSM1
(6-A2) BPDBIN
(6-B2) BCLK
(6-B2) BCLK
(6-A1) RESET
(5-A2) BXRDY
(5-A2) BPRDY
(6-A2) BPWAIT
(5-A2) WINDOW
(5-A1) +5VDC
BROADCAST
RAS0 (7-B1)
RAS1 (7-A1)
RAS2 (7-A1)
RAS3 (7-A1)
WRT (7-B1)
CAS (7-B1)
ENOUT (7-B2)
AMUX (5-B2)
BMWRT (5-A2)
REF (7-A2)
RESET (7-A2)
RESET (2-B1/3-B1)
(5-A1/6-A1)
SLAVECLR*
RESET*
POC*
(6-A2) BSOUT
(6-A2) PSTVAL
(6-A2) BSWO
BSOUT (2-
PSTVAL (6-
BSWO (2-
BCLK (6-
WCLK (6-
BCLK (6-
P1
PSYNC 76
SMEMR 47
SOUT 45
PDBIN 78
PWR* 77
SINP 46
SINTA 96
PWAIT 27
SMI 44
PSTVAL* 25
SWO* 37
BPSYNC (6-B1)
BSMEMR (6-B1/7-B2)
BSOUT (6-B1-B2)
BPDBIN (6-B1)
BPWR (2-A1/6-B1)
BSINP (6-B1)
BSINTA (6-B1)
BPWAIT (6-A1)
BSM1 (6-A1)
BPSTVAL (6-B1-B2)
BSWO (6-B2)
256 KMB
SHEET 6 OF 7

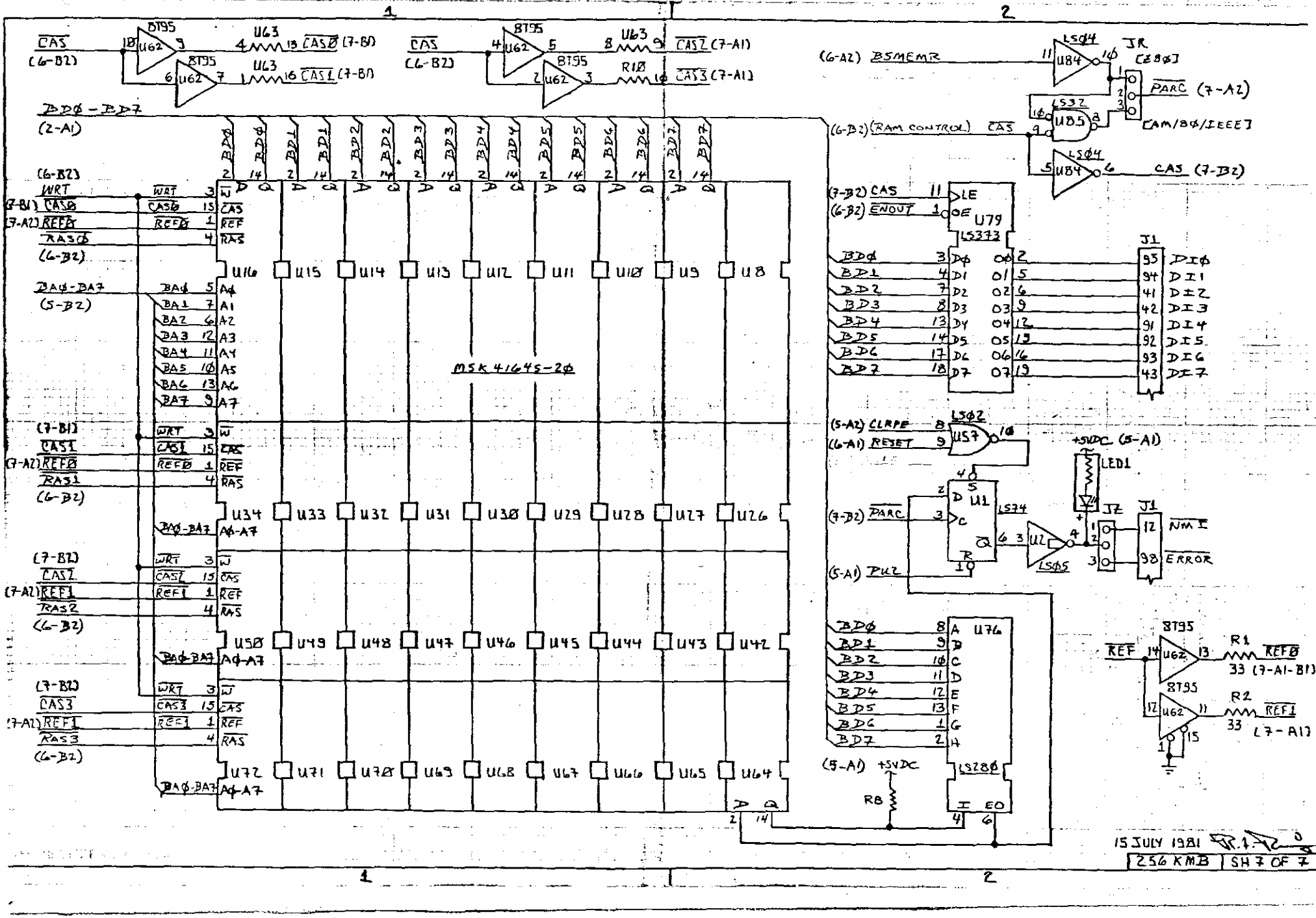

CAS (6-B2)
8T95
U62
U63
CAS0 (7-B1)
CAS1 (7-B1)
CAS2 (7-A1)
CAS3 (7-A1)
R10
BD0 - BD7 (2-A1)
(6-A2) BSMEMR
LS04
U84
JR [Z80]
PARC (7-A2)
LS32
U85
[AM/80/IEEE]
(6-B2) (RAM CONTROL) CAS
CAS (7-B2)
(6-B2) WRT
(7-B1) CAS0
(7-A2) REF0
RAS0 (6-B2)
BA0-BA7 (5-B2)
U16 U15 U14 U13 U12 U11 U10 U9 U8
MSK 4164S-20
(7-B1) CAS1
(7-A2) REF0
RAS1 (6-B2)
U34 U33 U32 U31 U30 U29 U28 U27 U26
(7-B2) CAS2
(7-A2) REF1
RAS2 (6-B2)
U50 U49 U48 U47 U46 U45 U44 U43 U42
(7-B2) CAS3
(7-A2) REF1
RAS3 (6-B2)
U72 U71 U70 U69 U68 U67 U66 U65 U64
(7-B2) CAS
(6-B2) ENOUT
U79
LS373
J1
DI0 DI1 DI2 DI3 DI4 DI5 DI6 DI7
(5-A2) CLRPE
(6-A1) RESET
LS02
U57
+5VDC (5-A1)
LED1
U1
LS74
U2
LS05
J2
NMI
ERROR
(5-A1) PU2
U76
LS280
(5-A1) +5VDC
R8
REF
R1
R2
33 (7-A1-B1)
33 (7-A1)
15 JULY 1981
256 KMB
SH 7 OF 7