IBM **Maintenance Information Manual**

VOLUME 1	VOLUME 2
1. PLAN	15. THEORY OF OPERATION
2. MAINTENANCE AIDS	16. DIAGNOSTIC DESCRIPTIONS
3. OPERATOR'S PANEL AND PRINTER SIGNAL CABLE	17. INSTALLATION INSTRUCTIONS
4. PRINT BELT AND DRIVE	18. PRINTER WIRING DIAGRAMS
5. PRINT UNIT AND HAMMER UNIT	19. FUNCTIONAL WIRING AND TIMING DIAGRAMS
6. RIBBON UNIT	20. PARTS CATALOG
7. FORMS PATH	21. GENERAL/TOOLS
8. CARRIAGE	22. INDEX
9. POWER	
10 BASE AND COVERS	
11 RESERVED	
12 RESERVED	
13. LOCATIONS	
14. PREVENTIVE MAINTENANCE (PM)	

5211 Printer Theory - Maintenance
Volume 2

EC 155975A 05Dec77 EC 784017 01Mar78	PN 8324117 1 of 2	V2-000

THIS PAGE INTENTIONALLY LEFT BLANK

SECTION 15: THEORY OF OPERATION

SECTION CONTENTS

INTRODUCTION 15-010

ATTACHMENT TO SYSTEM 15-020
Description 15-020
Forms Control Buffer 15-020
Print Line Buffer 15-020
Universal Character Set Buffer 15-020
System 15-020
5211 Printer Attachment 15-020
5211 Printer 15-020
Functional Units and Data Flow 15-030
Belt Motor and Drive 15-030
Print Subscan (PSS) Pulses and Home Pulses 15-030
Print Unit and Hammers 15-030
Ribbon Drive 15-030
Paper Clamp 15-030
Carriage 15-030
Power Supply 15-030
5211 Printer/System Signals 15-040
Power 15-040
Interlocks 15-040
Belt Drive and Subscan Control 15-040
Hammer Addressing and Firing 15-040
Ribbon 15-040
Forms Path and Carriage 15-040
Lights, Keys, and Switches 15-040

OPERATOR'S PANEL 15-050
General Description 15-050
Interlock Light 15-050
Check Light 15-050
Forms Light 15-050
Ready Light 15-050
Power On Light 15-050
Carriage Restore Key 15-050
Carriage Space Key 15-050
Ready Key 15-050
Stop/Reset Key 15-050
6LPI/8LPI Switch 15-050

PRINT BELT AND DRIVE 15-070
Print Belt Drive 15-070
Start Print Belt Motor 15-070
Acceleration and Running Speed 15-070
Belt Synchronization with System 15-070
Error Checking 15-070
Print Belt Drive Mechanism 15-070
Motor and Drive Pulley 15-070
Print Belt Positioning Rollers 15-070
Idler Pulley and Print Belt Release Mechanism . . . 15-070
Print Belt Motor Feedback 15-070
Print Belt Drive Motor Control 15-080
4 Megahertz Oscillator 15-080
Start Print Belt Motor 15-080
Print Belt Motor Feedback Control 15-090
Gated Open Loop Control 15-090
Belt Up To Speed 15-090
Belt Synchronization with System 15-090
CE Switch Control 15-110
Print Belt Error Conditions 15-110
Error Condition Checks 15-110
Print Belt Motor Control Timing 15-120
Print Belt Motor Control Timing Chart 15-120
Print Belt Drive Motor Control Logic 15-130

PRINT SUBSCAN (PSS) AND HOME PULSES . 15-140
Printer Components 15-140
Print Belt Timing Marks 15-140
Transducer 15-140
PSS Pulses 15-140
Synchronization to System 15-140
PSS Emitter Operation 15-140
Print Belt and Belt Guide Roller 15-140
Transducer and Amplifier 15-140
PSS and Home Pulse Development and Use 15-140
PSS Pulses 15-140
Home Pulse and Synchronization 15-140

PRINT UNIT AND HAMMERS 15-150
Printing Components 15-150
Hammers 15-150
Subscans 15-150
Print Scans 15-150
Print Line 15-150
Universal Character Set Buffer 15-150
Print Line Buffer 15-150
Forms Thickness and Impression Control 15-150
Addressing 15-150
Firing the Hammers 15-150
Error Checking 15-150
Print Unit Casting 15-150
Platen 15-150
Forms Thickness Control 15-150
Hammer Unit 15-150
Hammers 15-150
Hammer Coils 15-150

Theory of Printing 15-160
Print Mechanism 15-160
Home Pulse 15-160
Print Subscans 15-160
Impression Control Single Shot 15-160
Printing 15-160
Printing Sequence — Model 1 15-160
Printing Sequence — Model 2 15-160
Data Strobe 15-170
Hammer Fire Timing 15-170
Model 1 — Type Selection 15-180
Subscan, Print Belt, and Print Position Relationship 15-180
Scanning Sequence 15-180
Model 2 — Type Selection 15-190
Subscan, Print Belt, and Print Position Relationship 15-190
Scanning Sequence 15-190
Error Checking 15-200
Data Parity Check 15-200
Hammer-On Echo Check 15-200
Hammer-Off Checking — Not Print Time 15-200

RIBBON 15-220
Introduction 15-220
Ribbon Drive 15-220
Ribbon Stop 15-230
Ribbon Reversal 15-230
Check Circuits 15-230
Circuit 15-240

FORMS PATH 15-250
Introduction 15-250
Forms Load Compartment 15-250
Forms Entry Guides 15-250
End-of-Forms Switch 15-250
Tension Fingers 15-250
Paper Clamp 15-250
Forms Tractors 15-250
Tinsel 15-250
Stacker Compartment 15-250

CARRIAGE 15-270
Introduction 15-270
Carriage Drive 15-270
Tractors 15-270
Carriage Motor 15-270
Feedback Circuit 15-270
Carriage Detent 15-270
System Control 15-270
Forms Spacing 15-270
Forms Skipping 15-270
Forms Control Buffer 15-270
Carriage Motor Control — Diagram 15-280
Carriage Motor Control 15-290
Circuit Timing 15-290
Initial Carriage Advance Pulse 15-290
Further Carriage Advance Pulses 15-290
Stop Pulse Development 15-300
Carriage CE Switch Circuit 15-300

PRINT AND SPACE OPERATION 15-310
Model-1 15-310
System Setup 15-310
Printing Odd-Numbered Print Positions 15-310
Printing Even-Numbered Print Positions 15-310
Forms Movement 15-310
Model-2 15-320
System Setup 15-320
Printing 15-320
Forms Movement 15-320

POWER SUPPLY 15-340
Introduction 15-340
Power On Sequence 15-340

THIS PAGE INTENTIONALLY LEFT BLANK

INTRODUCTION

The IBM 5211 Printer is a line printer using belt technology. The print belt, a 1219 mm (48 in.) steel belt, has 192 characters at the top of the belt and timing marks at the bottom. Printing is done by driving the hammers against the back of the paper and ribbon and against the moving print belt. See A. The print line has 132 print positions that are spaced 10 characters per inch.

There are two Models of the IBM 5211 Printer:

- Model-1 has 66 hammers, one for two print positions. Each hammer is optioned twice for each print position.
- Model-2 has 132 hammers, one for each print position. Each hammer is optioned once for each print position.

Characters per character set	Character sets on each belt	Print Speed (lines per minute)	
		Model-1	Model-2
48	4	160	300
64	3	120	235
96	2	84	164

Carriage spacing and skipping is controlled by the system at either 6 lines-per-inch or 8 lines-per-inch (6LPI/8LPI).

The printer attaches to the system through the signal cable and the 5211 attachment. See B. For detailed information, see "Attachment to System", 15-020.

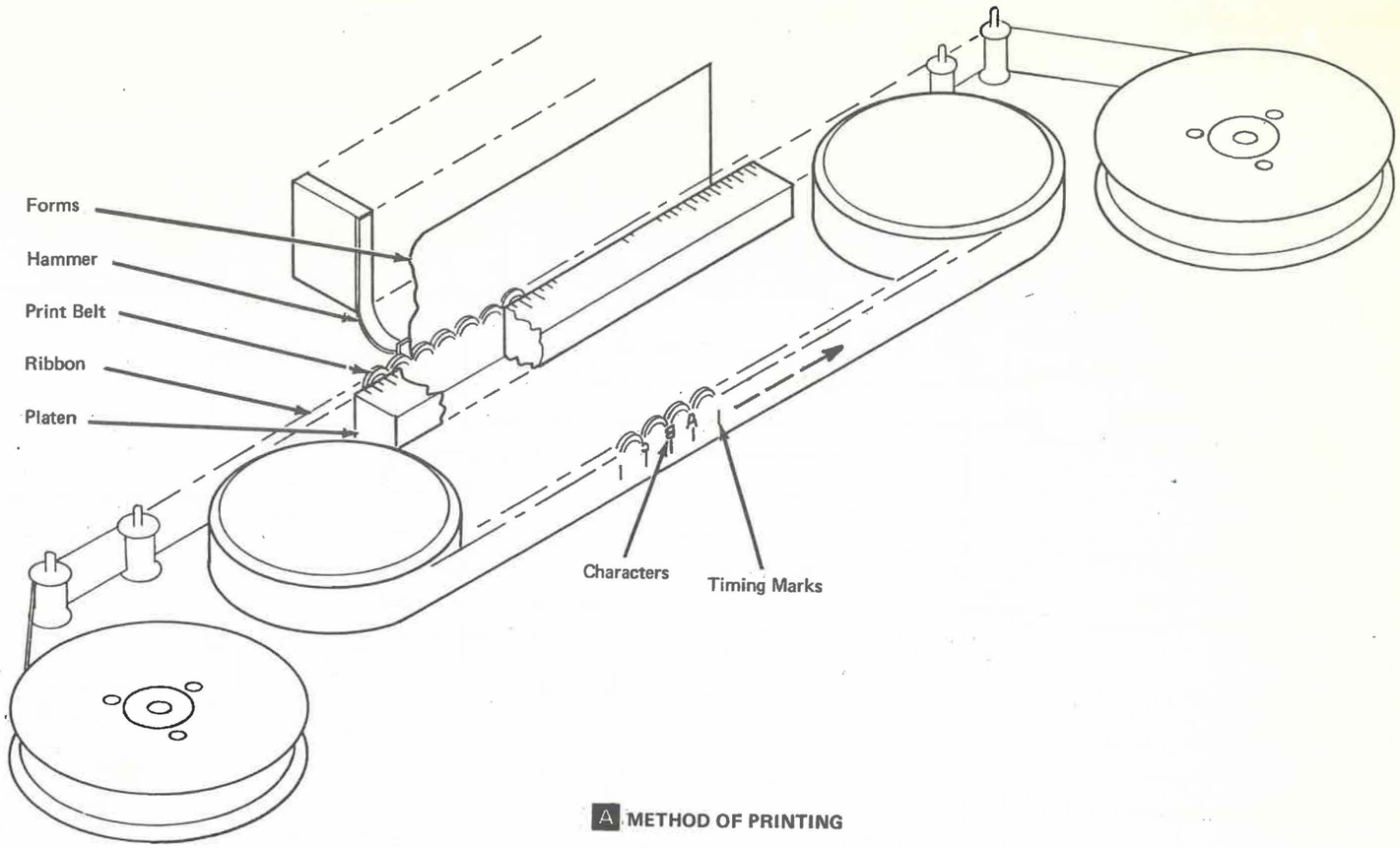

A METHOD OF PRINTING

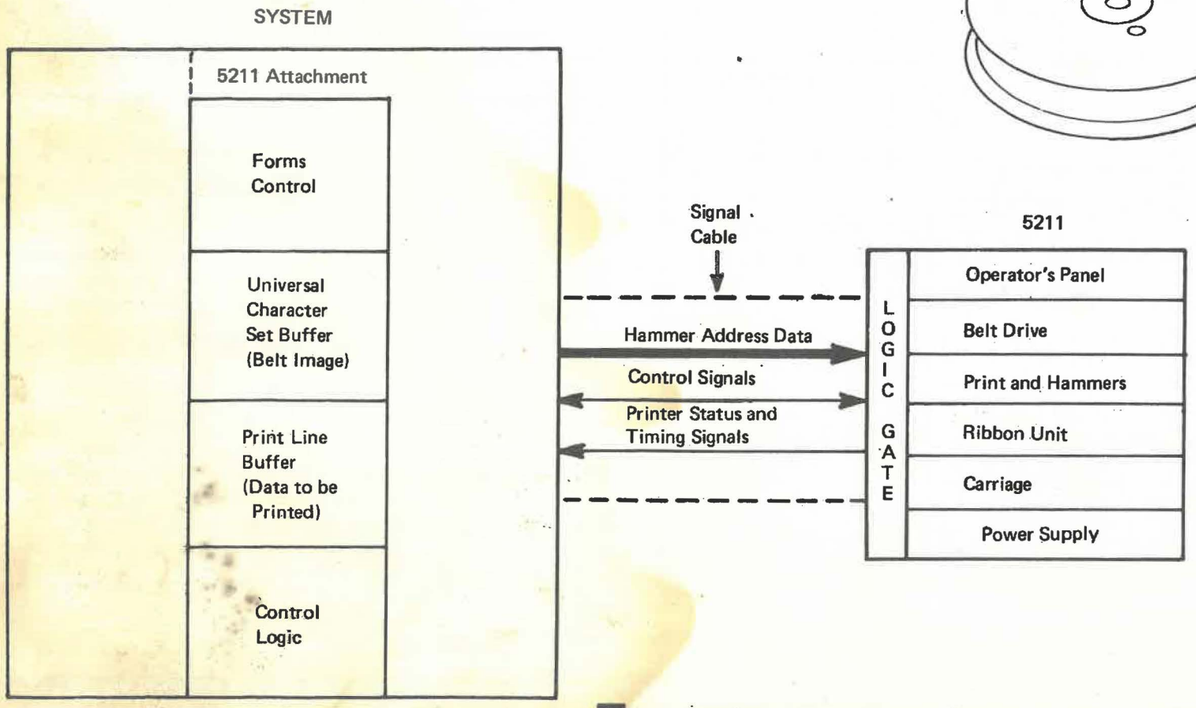

B ATTACHMENT TO THE SYSTEM

ATTACHMENT TO SYSTEM

DESCRIPTION

The IBM 5211 Printer attaches to the using system via a signal cable connected to the system's 5211 Printer Attachment. The printer attachment logic is located in the system. The printer logic and driver circuits are located on the printer logic gate in the printer.

The attachment contains 3 functional units that are needed to control the operation of the printer.

Forms Control Buffer (FCB) A

The Forms Control Buffer is loaded with the number of lines that are on the forms to be used. The line count is updated as the carriage moves the forms. This takes the place of the carriage tape.

Print Line Buffer (PLB) B

The Print Line Buffer is loaded with the data to be printed.

Universal Character Set Buffer (UCSB-Belt Image) C

The UCSB is loaded with the 192 characters that are on the print belt. The data to be printed is compared with the belt image characters in the UCSB for hammer addressing.

System D

The System contains the control program and the attachment controller. The System sends printer commands and data to the printer attachment.

5211 Printer Attachment E

The Printer Attachment contains control and checking logic for itself and the printer. It generates signals to run the belt and carriage motors, address and fire the hammers, and activate the lights on the operator's panel.

5211 Printer F

The Printer contains functional units consisting of the print belt, ribbon, hammers, carriage, and power supply, in addition to the logic and driving circuits to operate these units. It also contains circuits for feedback to the attachment, error checking, and other special printer circuits, such as the CE Switches.

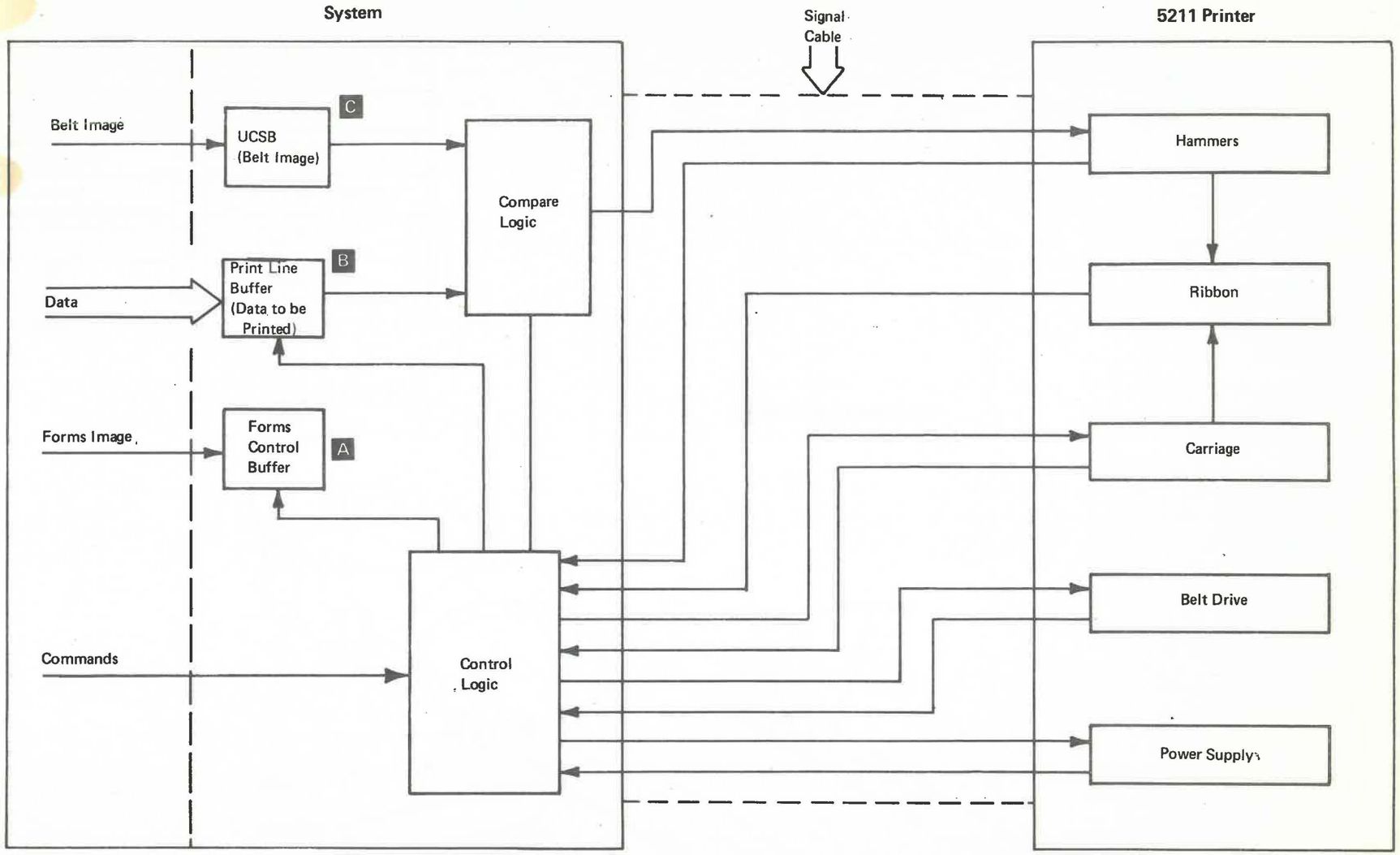

FUNCTIONAL UNITS AND DATA FLOW

Belt Motor and Drive A

The belt drive includes the belt motor, belt feedback, belt, belt pulleys, Print Subscan (PSS) emitter, and control logic. Its function is to move the belt in front of the hammers at a near-constant speed. The 'Belt Go' signal from the system generates the first motor advance pulse to start the belt motor. The motor is first detented, then it starts turning. After the motor starts turning, feedback pulses from the belt motor feedback circuit are used to generate additional motor advance pulses to keep the motor turning and accelerating. When the motor reaches a certain speed, as measured by the frequency of the feedback pulses, the motor advance control switches to the 4 MHz oscillator. When the belt is up to speed, (home and PSS pulses generated from the belt timing marks), the signal 'Belt Up to Speed' is sent to the system.

See "Print Belt and Drive", 15-070.

Print Subscan (PSS) Pulses and Home Pulses B

These pulses are generated from the timing marks on the print belt as it moves past the PSS emitter. Two PSS pulses are generated from each timing mark on the belt. One home pulse is generated for each home position (missing timing mark) on the belt. There is one home position for each character set on the belt.

After the signal 'Belt Up To Speed' is active, the PSS and home pulses are sent to the system. The system synchronizes itself to the printer with the home pulses. The system uses the PSS pulses to synchronize the characters on the belt to the correct hammers for printing. See "Print Subscans and Home Pulses", 15-140.

Print Unit and Hammers C

The print unit includes the print belt drive, platen, ribbon, and forms thickness control. The hammer unit includes all the hammers and hammer coils. The print unit positions the platen, the print belt, and the ribbon in front of the hammers. The forms thickness control adjusts the printer to print on different forms thicknesses by:

1. Changing the gap between the platen and the hammers.
2. Changing the duration of the hammer drive pulses.

See "Print Unit and Hammers," 15-150.

Ribbon Drive D

The ribbon drive includes the ribbon motors, reels, ribbon reversing switches, and control logic. The ribbon drive moves the ribbon horizontally across the print line. The ribbon moves during both printing and carriage operations. The ribbon is driven by either the right or the left drive motor under control of the ribbon reverse switches. A small current, called the ribbon-drag current, is applied to the non-driving motor to hold tension on the ribbon.

See "Ribbon", 15-220.

Paper Clamp E

The paper clamp, located under the print unit, has a magnet that operates a clamp bar. The clamp, when activated, holds the forms tightly against a guide under the hammers to prevent horizontal movement of the forms while printing. The system activates the paper clamp before and during printing, then deactivates it before the carriage moves the forms.

See "Forms Path", 15-250.

Carriage F

The carriage includes the carriage motor, tractors and control logic. The carriage moves the forms through the printer under system control. After the paper clamp releases the forms, the system activates the 'Carriage Go' Signal. The printer logic then generates the first carriage advance pulse to start moving the carriage motor. After the motor starts turning, feedback pulses from the carriage motor feedback generate additional carriage advance pulses that advance the motor and also signal the system that the carriage moved. The system counts the advance pulses to determine how far the carriage has moved. When the carriage has moved the distance specified in the forms command, the system deactivates 'Carriage Go'. The 5211 then generates three stop pulses to slow the carriage motor down before stopping it. A small detent current holds the carriage motor in the stopped position.

See "Carriage", 15-270.

Power Supply G

The power includes the primary section, the secondary section, and the distribution. The power supply converts the ac line voltage to dc voltages to operate the printer. The system normally controls the power supply in the 5211. The system activates the 'Power On' signal to turn on the printer power. When the power supply determines that the dc voltages are correct, it sends a 'Power Complete' signal to the system. The system then sends the 'Power On Reset' signal to the printer logic, followed by the 'Close 25-volt Contactor' signal.

See "Power Supply", 15-340.

Operator's Panel H

The operator's panel enables communication with the system. The signals from the four keys and the 6LPI/8LPI switch go to the 5211 logic then to the system. The Power light is turned on by the printer power supply. The Ready light is turned on by the system. The Check, Interlock, and Forms lights flash on and off continuously when activated by the system.

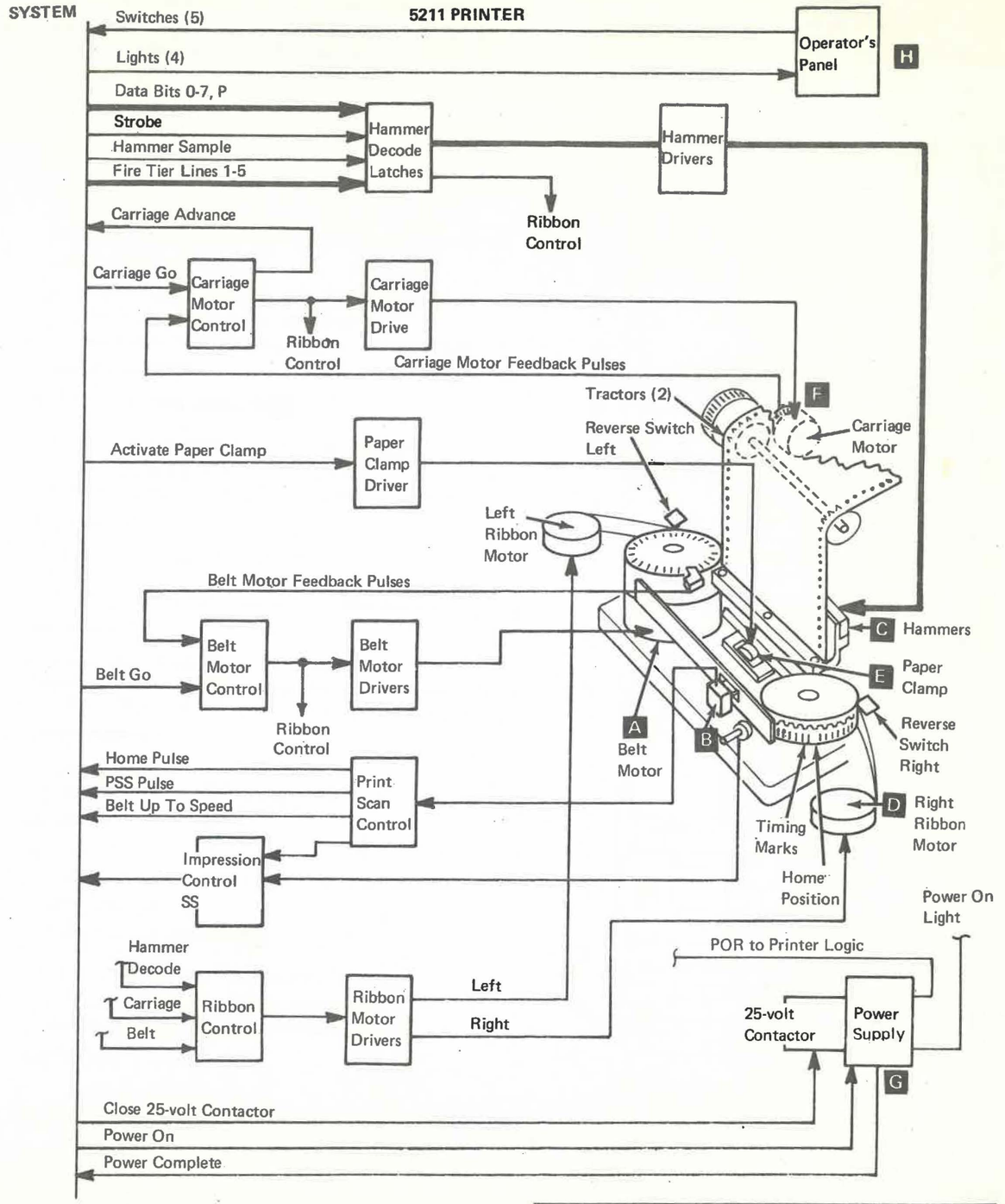

5211 PRINTER/SYSTEM SIGNALS

- The signals between the 5211 Printer and the System's Printer Attachment are described on this page.

Power A

Power On

This signal from the host system, turns on the 5211 power supply. When deactivated, it turns off the 5211 power supply.

Power Complete

The printer sends this signal to the system when all the voltages in the printer are correct.

Power On Reset (POR)

The system activates this signal to reset the printer logic circuits when turning power on, turning power off, and when certain errors occur.

Close 25-volt Contactor

The system activates the 25-volt contactor in the printer to distribute 25-volt power to the printer motors, hammer coils, and paper clamp magnet circuits.

Power Check

The power supply in the printer sends this signal to the host system when any failure occurs in the power supply.

For additional information, see "Power Supply", 15-340.

Interlocks B

Cable Interlock

The signal starts in the system, then goes through six signal cable connectors; (3 at the system, and 3 at the printer) and 1 at the Printer Operator's Panel. If the circuit cannot be completed, the system activates the signal. The signal, when active, indicates that a cable connector is not seated correctly or is in the wrong position.

For additional information, see "Operator's Panel," Section 3, 3-000.

Print Unit (Throat) Closed

This signal from the printer indicates that the print unit casting is closed and that the print belt cover is installed.

Belt Drive and Subscan Control C

Belt Go

This signal, from the system, activates the belt motor control circuits to run the belt motor. When deactivated, the belt motor stops.

Belt Up To Speed (BUTS)

This signal, when activated by the printer, indicates that the belt has reached operating speed. The system must receive this signal within 1.4 seconds after 'Belt Go' is active.

Print Subscans (PSS)

These signals from the printer are generated from the belt timing marks. The system uses these pulses to synchronize the characters on the belt to the correct hammer for printing.

Home

This signal from the printer is generated when a home position is sensed from the belt (one of the missing timing marks). The system uses the home pulse to synchronize itself to the printer.

For additional information, see "Print Belt and Drive," 15-070 and "Print Subscans and Home Pulses," 15-140.

Hammer Addressing and Firing D

Impression Control Single Shot

This signal from the printer has different time periods depending on the position of the forms thickness control. The system uses the pulses to change the length of the fire tier (hammer fire) pulses.

Data Bits 0-7, P

These signals from the system go to the hammer address decode circuits to turn on the correct hammer latch when 'Strobe' is active.

Strobe

This signal from the system gates the hammer address through the decoder to turn on the hammer latch in the printer.

Data Parity Check

This signal indicates to the system that the printer has sensed even parity from the data bits.

Fire Tiers 1-5

These 5 hammer-fire pulses from the system activate the hammer driver to fire the hammer if its corresponding latch is turned on. The pulses follow in sequence, Fire Tier 1, Fire Tier 2, and so on. The time duration of the pulse is changed by the impression control single shot.

Hammer Sample

The system sends 133 pulses (1 sync, followed by 132 sample) to the printer to sense which hammers are on.

Hammer Echo Return

These signals from the printer are returned to the system for each hammer sensed on by the hammer sample pulses.

Not Print Time

The printer signals the system that no data is being transmitted following printing to run the ribbon and to verify for an "Any Hammer On" condition.

For additional information, see "Print Unit and Hammers," 15-150.

Ribbon E

Printer Busy

The printer signals the system when the printer senses a ribbon reverse or too much belt speed variation. The system stops sending 'Data Bits' and 'Strobe' when 'Printer Busy' is active.

Ribbon Check

The printer signals the system that a ribbon motion or ribbon reverse failure was sensed by the printer.

For additional information, see "Ribbon", 15-220.

Forms Path and Carriage F

Activate Paper Clamp

The system activates the paper clamp to hold the forms when printing.

Carriage Go

The system activates the carriage motor control circuits to run the carriage motor.

Carriage Advance

The printer sends a carriage advance pulse to the system each time the carriage motor is advanced. The system counts the pulses to determine how far the carriage has moved.

Forms Pulse

The printer sends this pulse to the system each time a feed hole is sensed at the left tractor. The system uses the pulses to determine if forms movement is correct.

End-of-Forms

The printer signals the system that the end-of-forms switch has sensed the end of the last form in the printer.

For additional information, see "Carriage", 15-270.

Lights, Keys, and Switches G

Operator Panel Lights

The system turns on the respective light on the Printer Operator's Panel. (Check, Interlock, Forms, or Ready).

For additional information, see "Operator's Panel," 15-050.

Operator Panel Keys

Each signal from the printer stays active as long as the respective key is pressed. (Carriage Restore, Carriage Space, Ready, or Stop/Reset).

6LPI/8LPI Switch

The printer signals the system that the operator wants forms spacing at either 6 or 8 lines per inch.

CE Switch On

The printer signals the system whenever any of the 4 CE switches are turned on. (BELT GO, CARR, RIBBON, or PAPER CLAMP).

For additional information, see "CE Switch Panel", Section 2, 2-000.

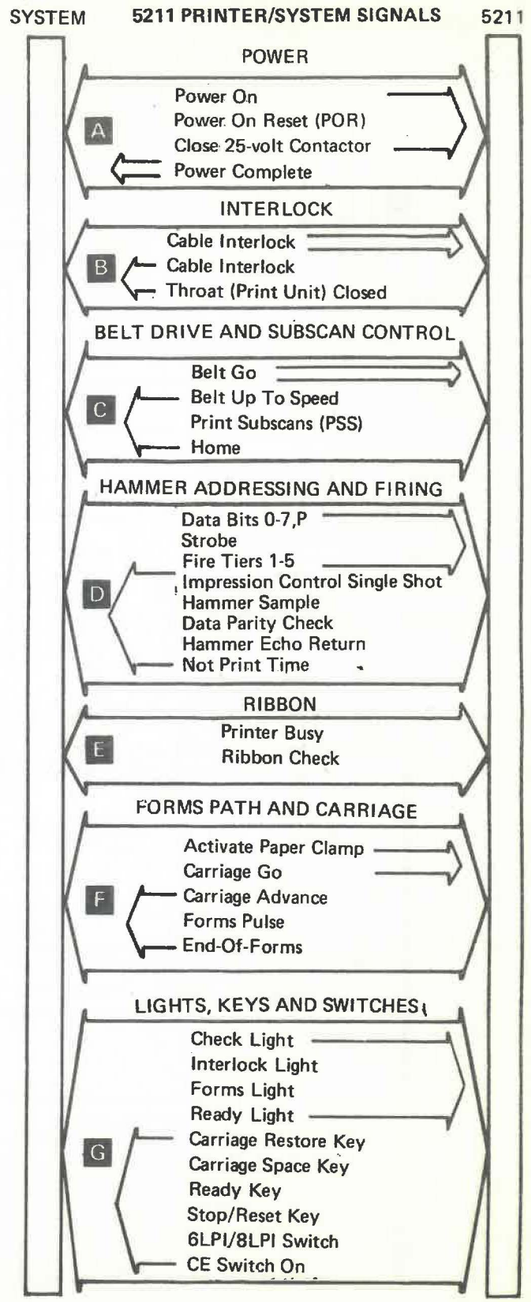

OPERATOR'S PANEL

GENERAL DESCRIPTION

The 5211 Operator's Panel enables communication with the system. The signals from the four keys and the 6LPI/8LPI switch go to the 5211 logic then to the system. The Power light is turned on by the printer power supply. The Ready light is turned on by the system. The Check, Interlock, and Forms lights flash on and off continuously when activated by the system.

The Operator's Panel has a light panel assembly and a key panel assembly located under the cover. The 6LPI/8LPI switch is in the base of the Operator's Panel. The light panel circuit board has five light-emitting diodes (LED's) and their drivers. The key panel circuit board has 4 elastic-diaphragm switches (EDS) that are closed by pressing their respective key.

For removal and installation, see "Operator's Panel," Section 3, 3-000.

Interlock Light (Yellow)

The Interlock light indicates any of the following conditions:

- Print unit open
- Print belt cover not installed

The light is turned off by closing the print unit and/or installing the print belt cover.

Check Light (Yellow)

The Check Light indicates the system has detected any of the following printer error conditions:

- Belt up to speed check
- Belt sync check
- Belt speed check
- Data parity check
- Hammer echo check
- Any hammer on check
- Printer busy too long check
- Printer busy too often check
- Ribbon check
- Forms jam check
- Carriage check 1
- Carriage check 2

The Check light is turned off by pressing the Stop/Reset Key on the printer.

Forms Light (Yellow)

The Forms light indicates the system has detected one of the following forms conditions:

- End-of-forms
- Carriage check 1
- Carriage check 2
- Forms jam

The Forms light is turned off by pressing the Stop/Reset Key on the printer.

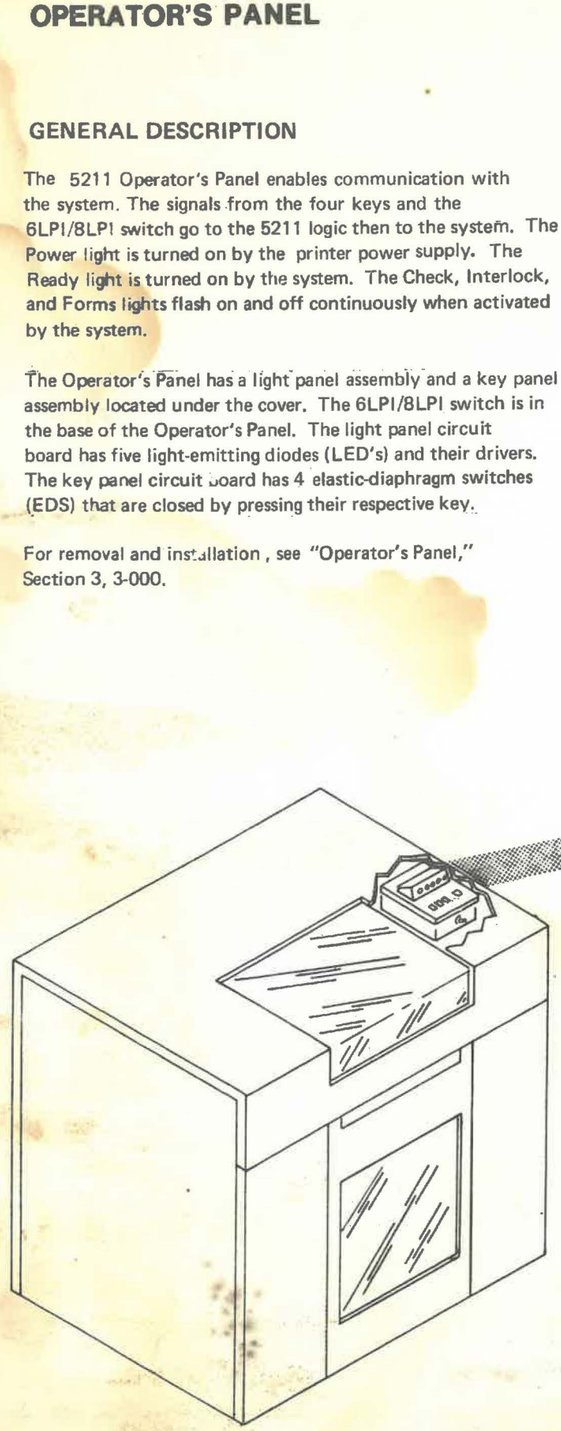

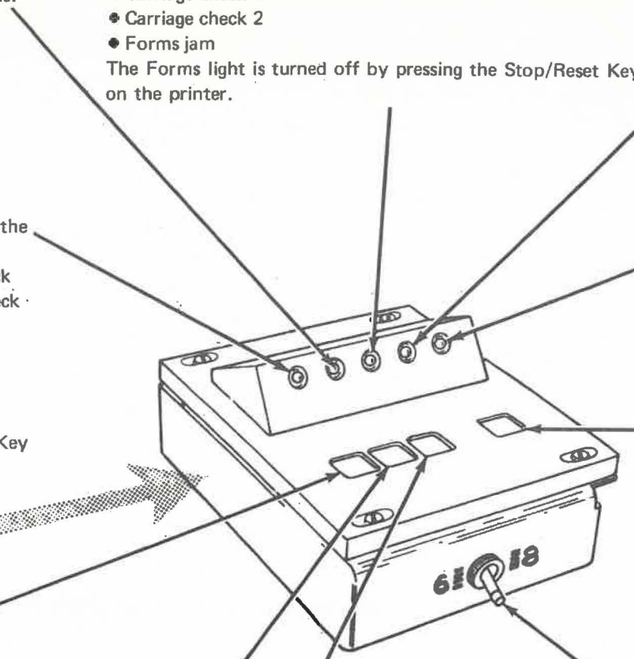

Ready Light (Green)

The Ready light indicates that the printer is ready. It is turned on by the system when the Ready key is pressed and neither the Check, Interlock, nor Forms light are on. It is turned off by pressing the Stop/Reset Key, or by any conditjon that turns on the Check, Interlock, or Forms lights.

Power On Light (Red)

The Power On light indicates that the printer power supply is active. It is turned on by the 5211 Power Supply. It is turned off when the +5-volts is not active in the 5211 Power Supply.

Stop/Reset Key

This key has two functions:

1. Stop. When the printer is ready, pressing this key sends a signal to the system that the operator wants to stop the printer. The system stops the printer after the program operation is completed. The ready light is turned off and the printer is made not ready.
2. Reset. When the Check or Forms light(s) is on, pressing this key sends a signal to the system to reset the light(s). The system then turns off the Check and/or the Forms light(s).

6LPI/8LPI Switch

This switch sets forms spacing to either 6 lines-per-inch or 8 lines-per-inch.

Carriage Restore Key

Pressing this key advances the forms to the first line to be printed. The key is active only when the printer is not ready.

Carriage Space Key

Pressing this key advances the forms one line space, 1/6 or 1/8 inch, depending on the position of the 6LPI/8LPI switch. The key is active only when the printer is not ready.

Ready Key

Pressing this key signals the system that the printer is ready for operation. The system then turns on the Ready Light, and starts the belt motor. The key is not active if either 'Interlock' or 'Printer Busy' is active.

THIS PAGE INTENTIONALLY LEFT BLANK

PRINT BELT AND DRIVE

NOTE: For all removals, installations and adjustments, see Section 4,4-000.

PRINT BELT DRIVE

The print belt drive starts the belt moving, accelerates it up to speed, and maintains the belt speed. The theory of how this is done follows.

Start Print Belt Motor

'Belt Go' from the system causes the print belt motor to detent. At the end of detent time, the motor starts.

Acceleration and Running Speed

The print belt motor speed continually increases until the motor feedback pulses which have been driving the motor, indicate that the motor is up to speed. Belt control then switches from the feedback pulses to pulses generated by a 4 megahertz oscillator.

Belt Synchronization With CPU or Host System

'Home Pulses' from the timing marks on the print belt synchronize the characters on the print belt with the print control unit Universal Character Set Buffer. (UCSB) This buffer in the system contains the character image of the print belt.

Error Checking

Print belt alignment, speed, breakage and synchronization with the system are monitored by the use of the Home and Print Subscan (PSS) pulses. Failures drop 'Ready' and require operator interruption.

PRINT BELT DRIVE MECHANISM

The print belt and drive mechanism is designed to move the print belt at an even speed past the print line. The mechanism also allows easy replacement of print belts.

Motor and Drive Pulley

The print belt drive motor, located on the left end of the print unit, is a vertically mounted stepper motor which turns the drive pulley A counterclockwise. The motor is driven in four different stages:

1. Detent
2. Start
3. Accelerate
4. Run

The pulley is free to float vertically on the motor shaft. This allows for the difference in flexibility of the belts. The cover over the drive pulley limits the upward movement. See "Print Belt Drive Motor Control," 15-080, for the three stages of control of the stepper motor.

Print Belt Positioning Rollers

The two positioning rollers B are located below and behind the drive and the idler pulleys.

The purpose is to limit the downward travel of the print belt. Because of the flexible differences between belts, the belt drive and the idler pulleys are free to float vertically on their shafts. See "Belt Positioning Rollers", Section 4-000, for installation.

Idler Pulley and Print Belt Release Mechanism

The idler pulley C provides tension to the right end of the print belt. Moving the print belt release lever D forward, moves the idler pulley to the left, releasing the belt. For adjustment of the belt idler pulley bracket, see "Belt Idler Pulley Bracket — Adjustment", Section 4, 4-000.

The cover over the idler pulley limits the upward travel of the idler pulley (See "Print Belt Positioning Rollers", 15-070. It also provides finger holes E for easier turning of the pulley by hand.

Print Belt Motor Feedback

The feedback pulses are used to monitor the speed of the belt motor and to provide constantly increasing feedback pulses to drive the motor faster. The feedback LED assembly F senses the holes in the feedback timing disk G, by shining a light through the holes in the timing disk and sensing the light with a photo transistor circuit, which amplifies the signal. (See Section 18, ZA082.) This feedback pulse is used to accelerate the print belt motor to print speed. (See "Print Belt Drive Motor Control, Section 15-080) The feedback LED block can be adjusted to change the lead time of the pulses, thereby changing the speed of the stepper motor (during acceleration time only). See "Belt Motor Feedback LED-Adjustment", Section 4,4-000.

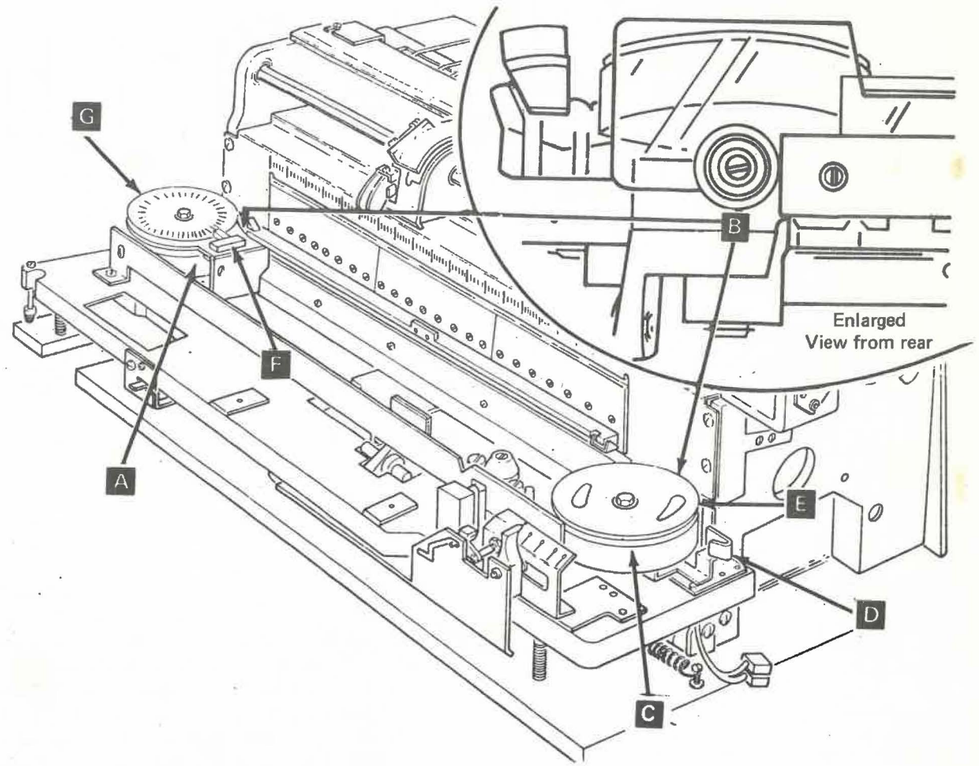

Enlarged
View from rear

PRINT BELT DRIVE MOTOR CONTROL

The print belt drive motor and mechanism is used to move the print belt past the front of the hammers at a constant speed, to allow evenly spaced printing. Motor drive during these stages is through printer circuitry which uses a one megahertz pulse and a motor drive pulse to advance a two position ring. The ring produces A, not A, B, and not B pulses which are sent to a motor driver card to drive the print belt drive motor. See "Print Belt Drive Motor Control Logic", 15-130. The four stages of control (See "Motor and Drive Pulley", 15-070) generate 'Motor Drive' A as shown:

Detent	'Belt Go Control' until 'Belt Go Delayed'	J
Start	'Start Pulse'	B
Acceleration	'Feedback'	C
Run	'Gated Open Loop'	D

For timing relationships of the 4 stages, see "Print Belt Motor Control Timing", 15-120.

4 Megahertz Oscillator

A 4 megahertz (MHz) oscillator, (See "Amplifier Card", Section 18, ZA030) starts when the printer is turned on, and it supplies 4 MHz, 1 MHz and .25 MHz pulses to various logic circuits. The 4 MHz oscillation starts an 'N' ring E that produces pulses approximately every 1.376 ms. These pulses are labeled 'N Trig A' through 'N Trig M'. The 1 MHz pulse starts an 'MC' ring F to produce pulses labeled 'MC Ring A' through 'MC Ring M'. These counters provide timing pulses internally to the belt control card. See "Belt Control", Section 18, ZA035.

Start Print Belt Motor (Start)

Belt Go Control J detents the motor to ensure counter-clockwise rotation with the start pulse and succeeding pulses. See "Print Belt Motor Control Timing", 15-120. Without this electrical detent, the motor might not turn in the correct direction. The motor can now be started from this detent position.

The objective in starting the motor is to activate 'Motor Drive' A to gate the A & B pulse 'FF' latches G, and to send a combination of A and B pulses to the Motor Driver card H to start the motor. See "Belt Motor", Section 18, ZA 071.

'Belt Go' from the system, along with an 'N Trig B' pulse activate the Belt Go Control latch J. 'Belt Go Control' with timing pulses 'N Trig J' and 'N Trig G' turn on the Belt Go Delayed latch K. 'Belt Go Delayed' allows the Gate Motor Drive Latch L to be set by 'Motor Drive', which is activated by 'Start Pulse'. 'Start Pulse' deactivates when the Belt Start latch M turns on at MC Ring J time. The Gate Motor Drive latch resets at MC Ring K time.

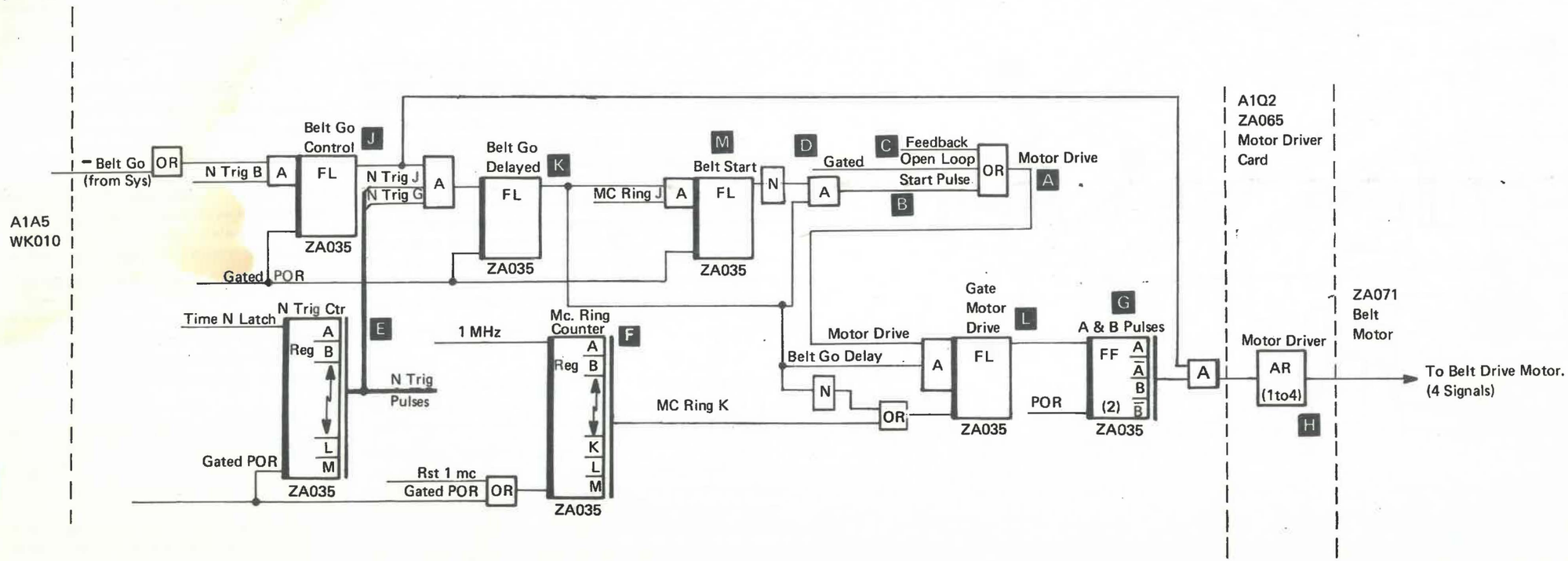

Print Belt Motor Feedback Control (Accelerate)

The print belt drive stepper motor must accelerate to print speed within 1.4 seconds after 'Belt Go'. The belt control circuits monitor the speed during this time by using the belt motor feedback pulses. See "Print Belt Motor Feedback", 15-070. As the motor starts to turn, the feedback LED senses the first hole in the timing disk. This pulse, when amplified, sets the Feedback latch A at D3 time B (It will reset at the following D2 time.) 'Feedback Latch' and not 'Motor Up to Speed' (MUTS) are ANDed to give 'Feedback' C. These 'Feedback' pulses increase in frequency as the speed of the motor increases.

The Slow Latch D is turned on every 900 μs by the 900 decode E. The Slow latch, when on, prevents the MUTS latch F from turning on and therefore allows the line 'Feedback' C.

However, when the frequency of the feedback pulses from the LED cause the Feedback latch to turn on *before* 900 μs, the MUTS latch F *will* turn on. The Feedback latch will continue to turn on but its output is now degated by 'MUTS'.

Gated Open Loop Control (Run)

The output of the Motor Up To Speed latch allows timing pulses from the '919 decode' G to set the Open Loop latch H. 'Open Loop' with '1 Mc' becomes 'Gated Open Loop' which provides 'Motor Drive' and run mode.

Belt Up To Speed (UTS)

'Belt UTS' to the System J indicates that the correct print belt speed has been reached. The 'Belt UTS Gate' had been set after start time and by the timing pulse 'N Trig K' K. The 'Belt UTS' latch can be set when these three conditions are active:

1. The PS and Home pulses are inactive L
2. The motor is up to speed M
3. The belt is in motion, not installed N

'Belt UTS' must be active within 1.4 seconds after 'Belt Go' is activated by the system.

Constant monitoring of the pulses from the PSS emitter is necessary to keep the printer operating. See "Belt Error Conditions", 15-110.

Belt Synchronization With System

'Belt UTS' and 'Home Pulse' are sent to the system to indicate that printing can begin when the system and the printer are synchronized. Each character-set on the print belt has a missing timing mark which indicates home position. (Timing marks are raised vertical projections.) The 'Home Pulse' is sent to the system, along with the PSS pulses to synchronize each character on the print belt to the characters in the Universal Character Set Buffer.

A1N2 (ZA035)

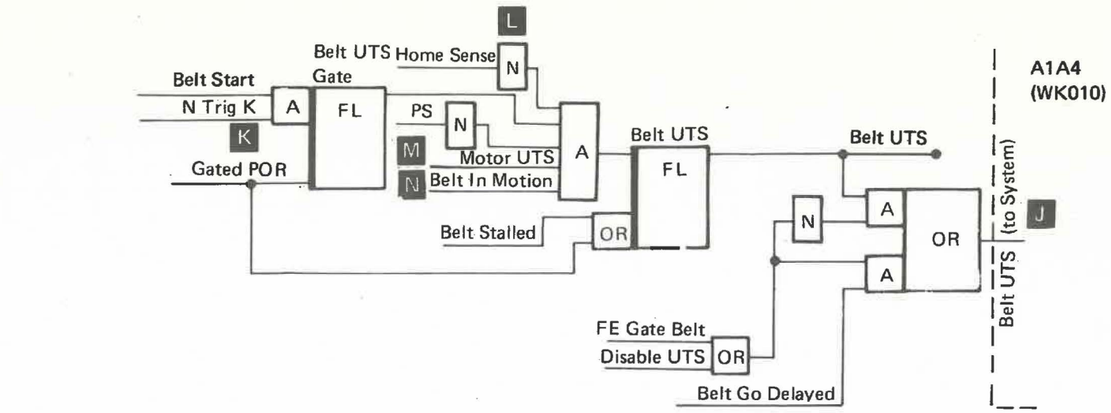

THIS PAGE INTENTIONALLY LEFT BLANK

CE Switch Control

CE switch 1 (Belt Go) is provided to test the print belt stepper motor for correct operation. CE switch 1 turns on the FE latch A which activates 'Disable UTS' B. This turns on the Belt Go Control C, Belt Go Delayed D, and the Belt Start E latches to activate 'Start Pulse' F and 'Motor Drive' G. The belt drive motor will now run continuously in closed loop mode. (This is the same as normal belt motor start). At the same time 'Disable UTS' degates 'Belt UTS' H, and holds the 'Motor UTS' latch J reset.

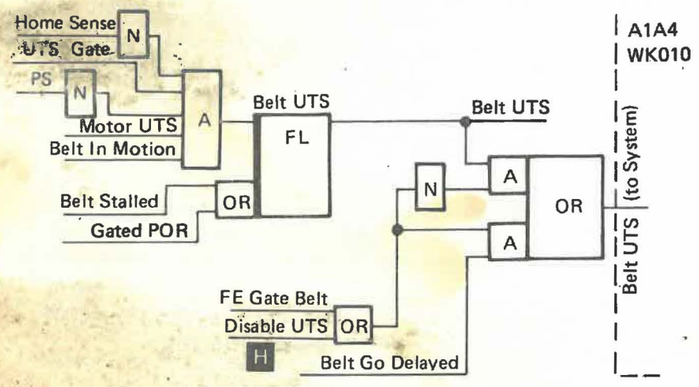

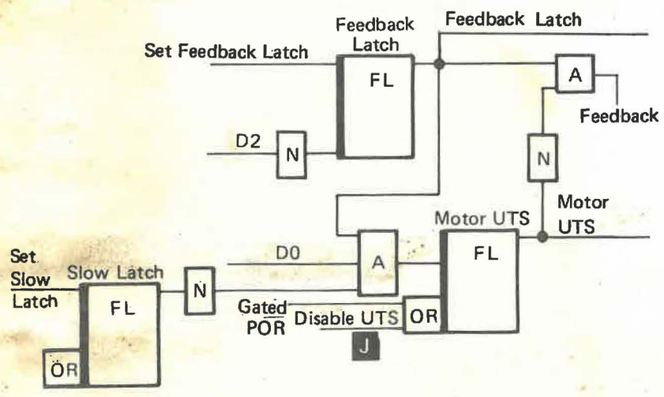

A1N2 (ZA035) Belt Control Card

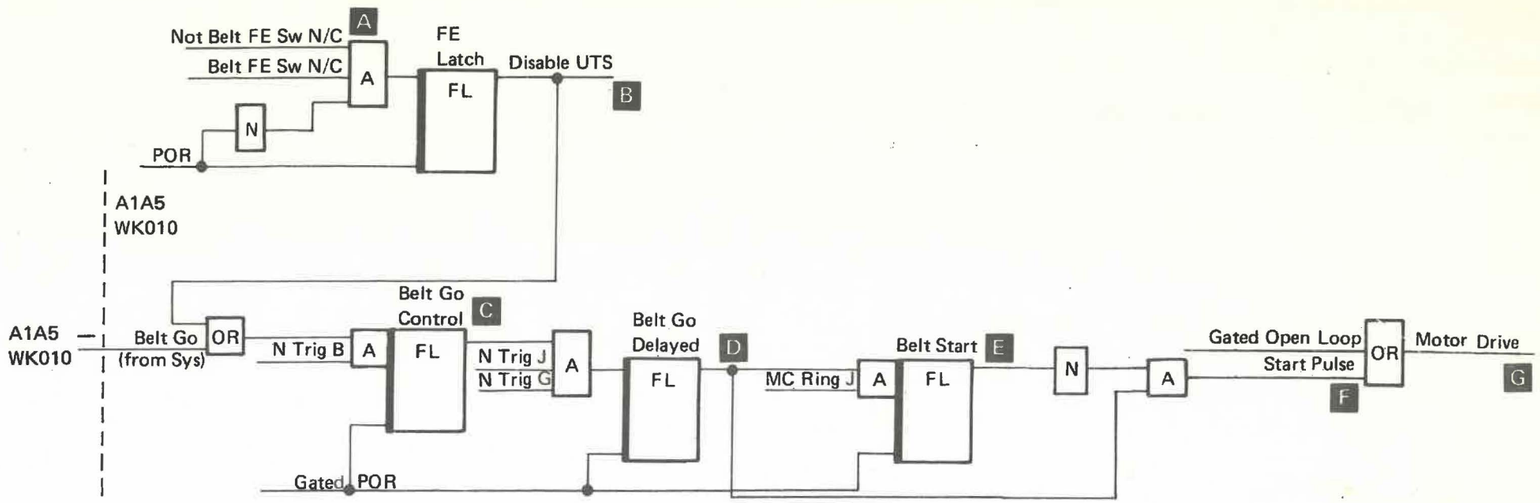

A1N2 (ZA035) Belt Control Card

PRINT BELT ERROR CONDITIONS

The PSS transducer senses belt timing marks, or the absence of timing marks in the case of 'home'. The PSS pulses are used to monitor the speed of the print belt, to produce 'home' and to produce the PSS pulses. There is a 'home position' (lack of a timing mark) for every 'character set'.

The PSS pulses are used for the following checks:

Error Condition Checks

The following problems cause error conditions, drop 'Ready' and require operator action. (The 'Ready' light comes on and the 'Check' light turns off, after the operator corrects the situation.) If the belt should break, lose speed or run crooked, printer 'Ready' drops. If the belt guide roller wears out, or the transducer of the PSS emitter fails, a sync check occurs and the printer drops 'Ready'.

Belt Up To Speed Check

'Belt Go' drops if the time between 'Belt Go' and 'Belt UTS' is longer than 1.4 seconds. After the error is 'logged' by the system program, a restart is initiated. A second restart with an error drops 'Ready' and requires operator action.

Belt Speed Check

This check drops 'Belt Go' if 'Belt UTS' becomes inactive when 'Belt Go' is active. Power On Reset (POR) is initiated and the DC contactor is dropped. ('Belt Up To Speed' is reset if the belt stalls.)

Belt Sync Check

A missing 'Home' pulse from the PSS emitter, or a mis-timed 'Home' pulse drops 'Belt Go'. This can happen if the belt breaks, or runs too fast or too slow.

Printer Busy Too Long Check

The 'Printer Busy' indication to the system must not exceed 3 seconds during a print cycle, or 'Belt Go' and printer 'Ready' drops.

Printer Busy Too Often Check

A total of three 'Printer Busy' signals during a print cycle drops 'Belt Go' and printer 'Ready'.

PRINT BELT MOTOR CONTROL TIMING

Note: The conditions shown are from a Power On Reset status.

1. 'Belt Go' A is sent by the system to start the printer.
2. The Belt Go Control latch is turned on B from 1 to 4 ms after 'Belt Go'.
3. 'Belt Go Control' causes 'not A' and 'not B' to be active C electrically detenting the stepper motor. (The motor must first detent in order to start on the first advance pulse.)
4. The Belt Go Delayed latch D is turned on approximately 450 ms after 'Belt Go Control'.
5. 'Belt Go Delayed' (until 'Belt Start Latch') gives 'Start Pulse' which allows 'Motor Drive' and 'Gated Motor Drive' E to the motor driver card.
   The first stepper motor advance pulse is 'A' and 'not B' F.
6. As the motor starts to turn, the feedback LED senses the edge of the first hole on the feedback disk and sends back its first pulse G. This sets the 'Gated Motor Drive' latch H, which produces the next stepper motor advance pulse (B, A) J.
7. The 'Belt M Feedback' pulse G increases in frequency as the stepper motor speed increases, setting the Feedback latch, which sets the MUTS latch before the 900 decode circuit can set the Slow latch. See "Print Belt Motor Feedback Control", 15-090.
8. Approximately 715 ms to 1.4 seconds after 'Belt Go' is active, 'Belt Up To Speed' becomes active K. After 'Belt Up To Speed' is reached feedback pulses are no longer used L.

PRINT BELT MOTOR CONTROL TIMING CHART

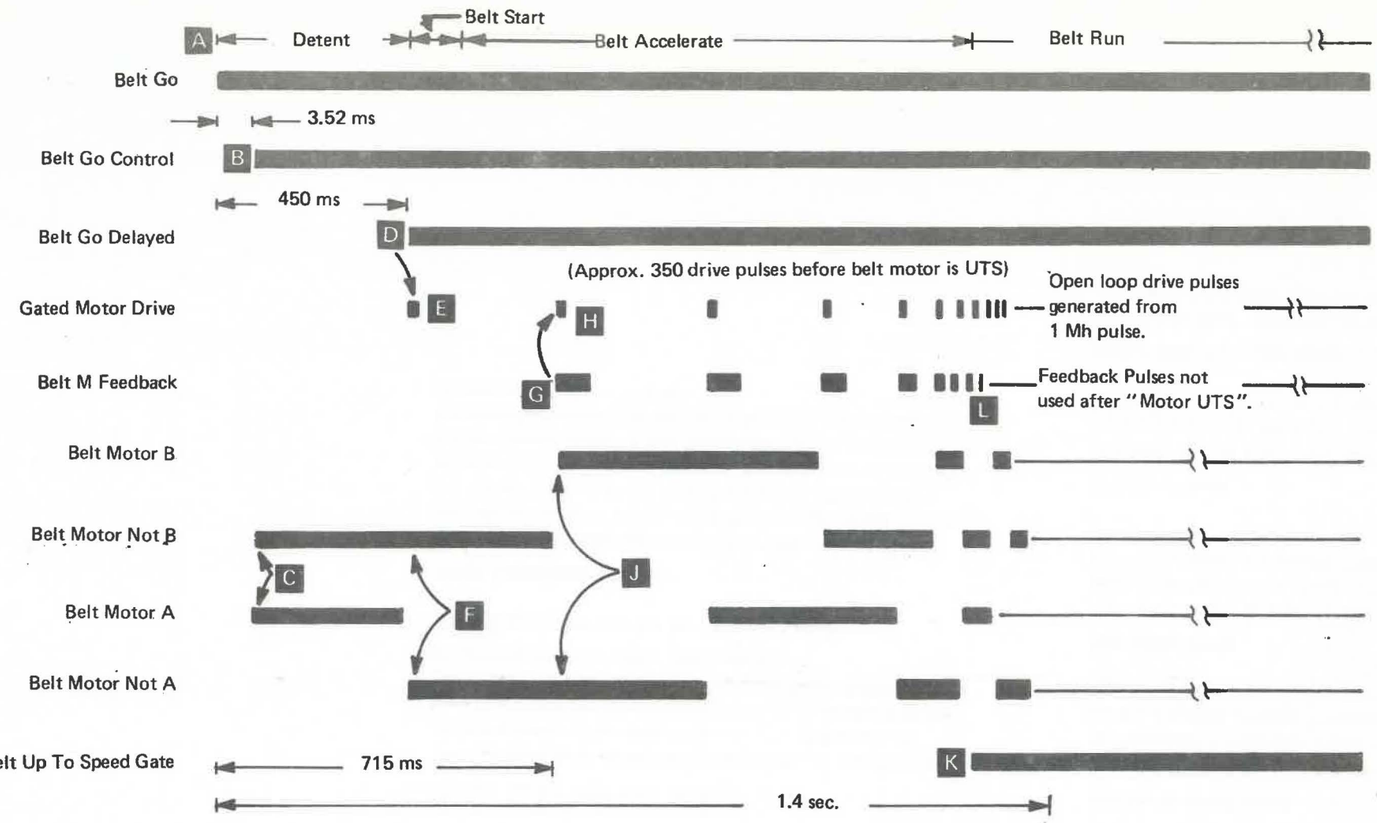

PRINT BELT DRIVE MOTOR CONTROL LOGIC

Note: The 2nd level diagram shows the Print Belt Motor Control circuitry and references to the Section 18 wiring diagrams.

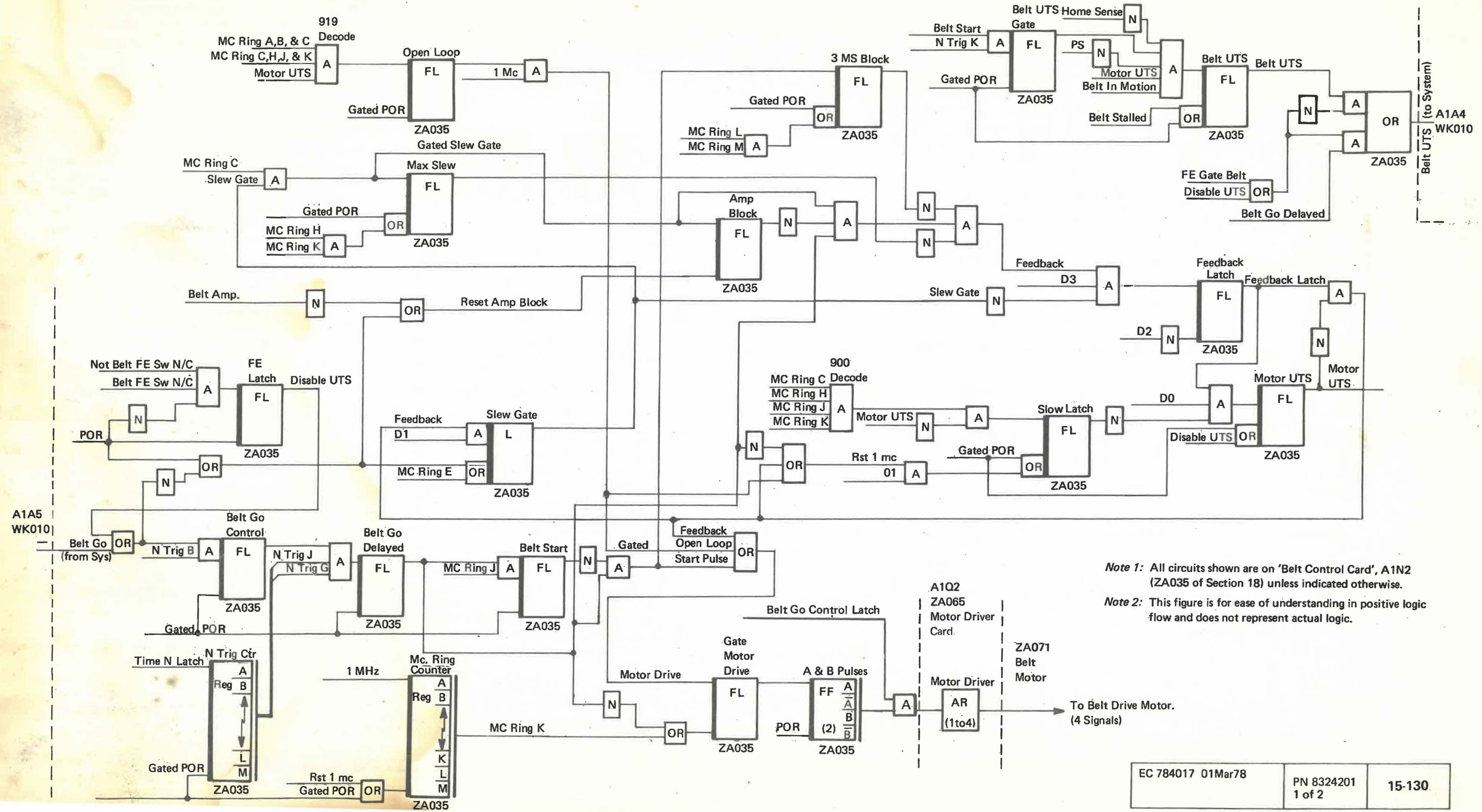

Note 1: All circuits shown are on 'Belt Control Card', A1N2 (ZA035 of Section 18) unless indicated otherwise.

Note 2: This figure is for ease of understanding in positive logic flow and does not represent actual logic.

PRINT SUBSCAN (PSS) AND HOME PULSES

Note: For all removals, adjustments and installations, see Section 4, 4-000.

PRINTER SUBSCAN COMPONENTS

Print Belt Timing Marks

The timing marks A are raised marks on the print belt used to generate PSS pulses. The example of one print belt shows 5 marks B for every two characters C .

Transducer

This permanent magnet and coil are used to sense timing marks or timing marks that are missing.

PSS Pulses

The raised timing marks are sensed by the transducer which sends pulses to the electronics gate to generate PSS and 'Home' pulses. (A missing timing mark D creates a 'Home' pulse.)

Synchronization to System

The Home and PSS pulses are used to synchronize the mechanical and the electrical portions of the printing operation. (The print belt is synchronized to the print belt image contained in the adapter.)

PSS EMITTER OPERATION

Print Belt and Belt Guide Roller

The print belt moves counterclockwise between the transducer E and a belt guide roller F . Tension from the idler pulley keeps the belt against the belt guide roller. The belt drives the roller by friction to prevent wear. The belt guide roller allows the belt to run smoothly, and also acts as a backstop for transducer adjustments. The transducer is adjusted close enough to the print belt timing mark to be able to sense the timing marks, but not wear the timing marks or the transducer G . See "Print Subscan Transducer-Service Check", Section 4, 4-000, for adjustments.

Transducer and Amplifier

The transducer is energized as each raised timing mark on the print belt passes the transducer. At print speed, the timing marks generate pulses through the transducer coil H to the amplifier J . The belt control card K looks at 'Early Emitter' to provide 'PSS' and 'Home' L pulses to the system at the correct time, once Belt UTS M has been reached. (See "Belt Up To Speed," Section 15-090.)

PSS AND HOME PULSES DEVELOPMENT AND USE

PSS Pulses

The print belt emitter output (a 1300 MV, peak-to-peak waveform) is sent to the amplifier card. A 'Time N' latch emits a pulse to synchronize the outputs of 'early', 'raw' and 'pure emitter' to obtain a PSS pulse and 'Home time'. The PSS pulses are sent continuously to the system. 'Home' pulse is sent only when there is a missing timing mark.

The print belt emitter output is amplified N and sent to the Belt Control Card as 'Early Emitter'. The line 'Early Emitter' sets an Early Emitter latch O , which in turn is used to set the Raw Emitter latch. As shown at P , the Raw Emitter latch is active later than 'Early Emitter' O to prevent extra input from the print belt emitter amplifier. (If random noise enters during the time shown at Q , it will not be passed on because of this difference of turn-on times of the latches.)

Home Pulse and Synchronization

Upon the fall of the Raw Emitter latch and the next 'D1' time, Pure Gate latch is set. This activates the Pure Emitter latch and synchronizes 'Pure Emitter' R to the electronics clock.

The Time N latch S and the PSS Ring Counter T are used for timing and control. 'Time N' occurs from D1 time to the following D0 time. Home time U is a decode of the PSS Ring. It turns on the Home Sense latch V , which resets when 'Raw Emitter' turns on W .

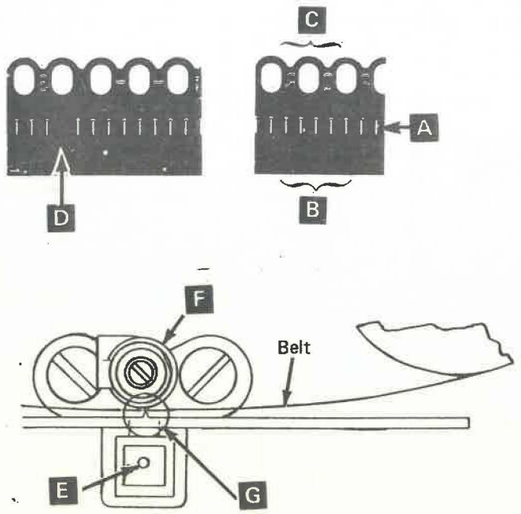

However, at 'Home Time' X , when a timing projection *is not* present, 'Early Emitter' and 'Raw Emitter' are *not* set. Because 'Raw Emitter' normally resets 'Home Sense' but is now absent, 'Home Sense' stays active Y . 'Home Sense' allows 'Home' to synchronize the system to the print belt Z .

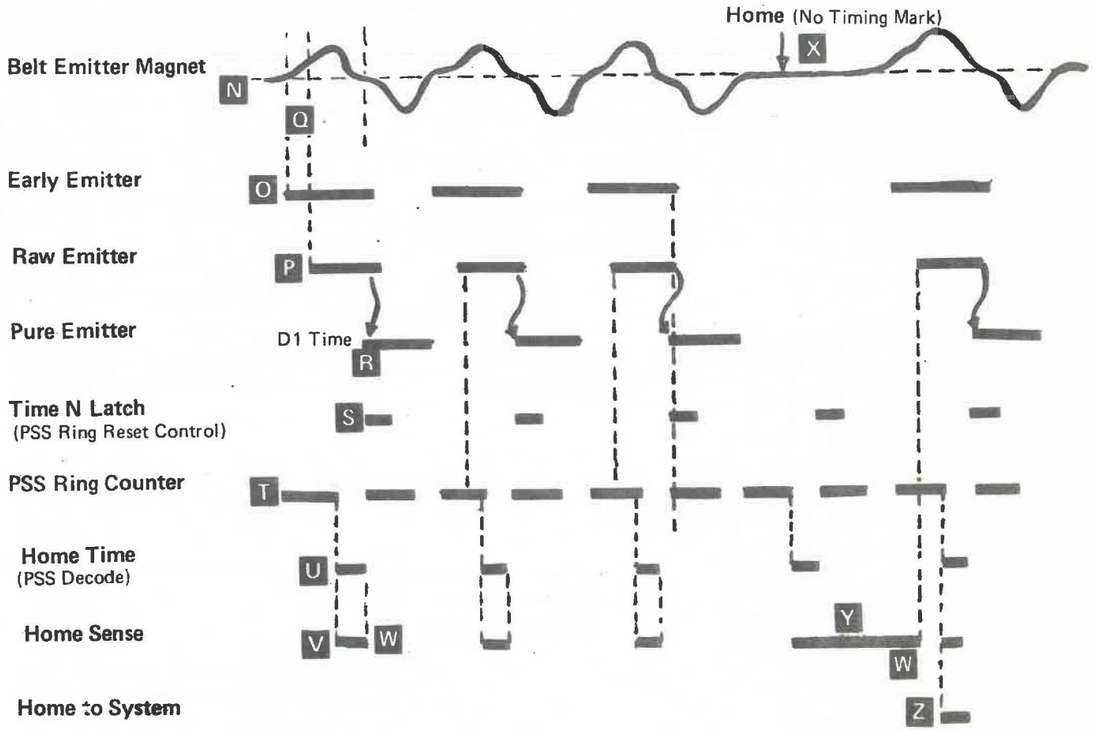

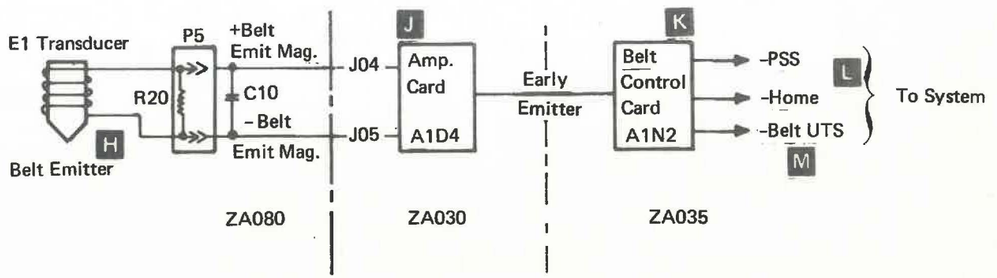

PRINT UNIT AND HAMMERS

PRINTING COMPONENTS

Hammers

The 5211 Printer has 132 print positions with either 66 (model 1) or 132 (model 2) hammers.

Subscans

A subscan is the time required to option every tenth print position to every fourth print belt position (model 1); or every fifth print position to every other print belt position (model 2). Five subscans make one print scan. (This is a function of the CPU or the using system.)

Print Scans

On a model 1 a print scan is the time required to option one character to every odd print position or every even position. On model 2 the print scan is the time required to option one character to all print positions.

Print line

Each character of a print belt is optioned to print every print position. Therefore, a 48-character-set belt would have a print line of:

48 odd and 48 even print scans for model 1
48 total print scans for model 2

Universal Character Set Buffer (UCSB)

This is a buffer, in the system, which stores the image of the characters on the print belt. The buffer must be reloaded if the print belt is changed. (This is a function of the CPU or the Host System.)

Print line Buffer (PLB)

This buffer stores the image of the line to be printed. (This is a function of the CPU or the Host System).

Forms Thickness and Impression Control

This control mechanically adjusts the platen for throat clearance and changes an impression control potentiometer to vary the duration of the hammer-fire pulse. See "Impression Control Single Shot", 15-160.

Addressing

Hammer latches are addressed when the character on the print belt matches the character to be printed from the Print Line Buffer and the character is aligned with the correct print position. The latches are turned on by an 8-byte (plus parity) addressing scheme from the system.

Firing the Hammers

Hammers are fired if their hammer latches have been set approximately 1½ subscans prior to the print time. ('Fire Tier' lines control the 'hammer on' time.)

Error Checking

Print operation monitored by 'Data Parity Check', 'Hammer Echo Check', and 'Any Hammer On Check'.

PRINT UNIT CASTING

Platen

The platen on the 5211 printer is adjustable to allow for multipart forms. The forms thickness control A is set from 1 through 6, depending on the total forms thickness. The bar extending to the left B operates a cam and roller assembly which moves the platen closer to, or farther away from the hammers.

Forms Thickness Control

The movement of the forms thickness control also adjusts the Impression Control Potentiometer by sliding a pin in the slot at C. This turns the arm attached to the potentiometer D, thereby changing the value from the potentiometer. This potentiometer determines the pulse width from the Impression Control Single Shot. See "Impression Control Single Shot", 15-160.

HAMMER UNIT

Hammers

Model 1 - The hammer, pivoting at E is forced toward the platen, as shown by the arrow F.

Model 2 - The even (top) G and the odd (bottom) H hammers pivot at the points shown by the arrows J. The hammers move toward the platen as shown. K

Hammer Coils

The coils on both Model 1 and Model 2 are such that the winding goes around the axis of the coil and the tail of the hammer. It is attracted into the center of the coil as shown at L and M.

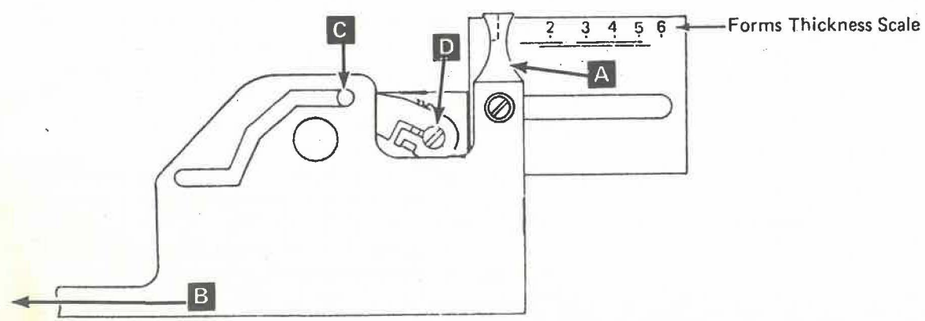

Model 2

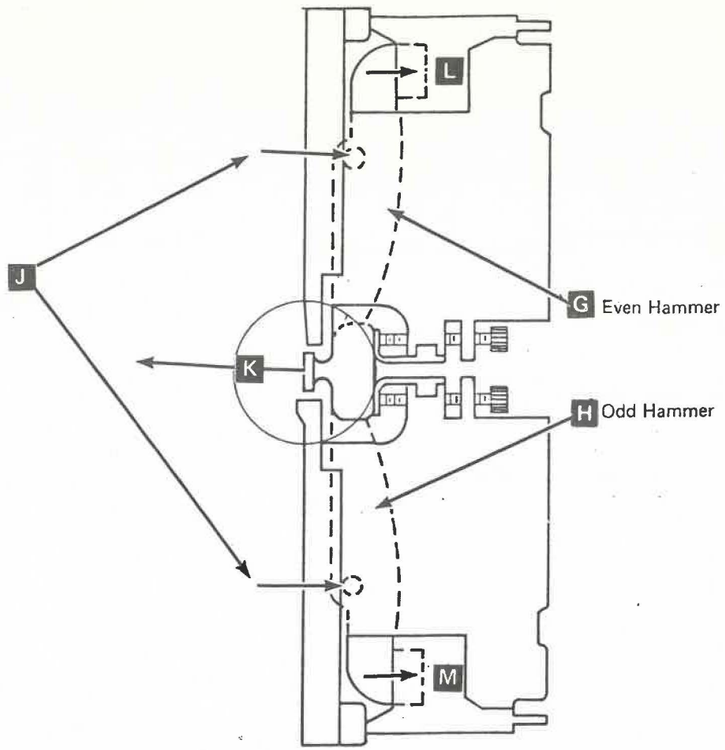

Model 1

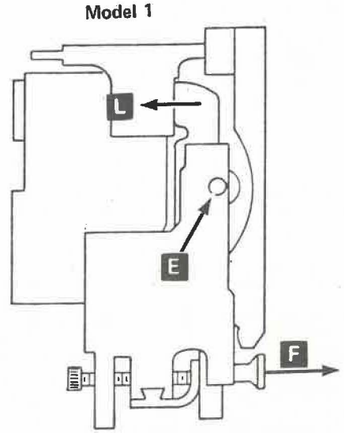

THEORY OF PRINTING

Print Mechanism

The print belt is an endless steel band that is 1219.2 mm (48.0 in) long, and has 192 raised characters (for Models 1 and 2). While the belt is continuously moving, printing can only occur when a known character is aligned with the correct hammer position. The timing or alignment of the correct character with a print position is synchronized by the printer sending the 'Home' and 'PSS' pulses to the system, which controls the print time.

Home Pulse

The Home Pulse is generated 1½ subscans before hammer number one can be fired to print the first character in print position number one. Therefore, optioning a hammer to print occurs 1½ subscans before the printing occurs. If the missing timing mark (home) is lined up with the print belt emitter, numerical character 1 is slightly to the right of print position one. By the time the hammer is fired, character 1 and print position one are both electronically and mechanically aligned when the character is to be printed.

Print Subscans

The print subscan pulses electronically divide the print belt character spacing into 5 parts, called fire tiers or subscans A. The subscans are generated by the printer during each complete print scan period. A print scan is the time interval between the alignment of a sequence of belt characters at print position one. During one print scan, all print positions will have been optioned to one character.

Impression Control Single Shot

The forms thickness control mechanically adjusts the print mechanism forward or back for different form thicknesses. The control also adjusts a potentiometer that varies the width of the image control single shot pulse. As the print mechanism is adjusted for thicker forms, the pulse width is also increased. B The pulse width can vary from 251 ms, for single part form, to 523 ms for 6 part forms. The width of the single-shot pulse determines the width of the fire tier pulses. C The variable times are shown in shaded areas.

PRINTING

Printing Sequence - Model 1

The relationship of hammer pitch to print belt pitch results in a printing sequence such that at any one subscan every tenth print position and every fourth type element are aligned. Starting wth print position one, this electronic sequence continues until all the hammers to be selected during each subscan have had the option of firing. Because the Model 1 print hammers each span two print positions, the odd positions D are scanned during the passage of one array of characters and the even positions E are optioned during passage of the second array. Two sets of characters must pass the print line to ensure printing of a full line. A delay of 15 subscans (10.35 ms nominal) must be allowed for hammer settling F before the even positions can be optioned for firing during the passage of the second array

The following is an example of the sequence of character/print options occurring in the odd scan or 5 subscans.

Subscan 1 - Print Positions 1, 11, 21, 31, etc., optioned respectively to characters 1, 5, 9, 13, etc.
Subscan 2 - Print Positions 3, 13, 23, 33, etc., optioned respectively to characters 2, 6, 10, 14, etc.
Subscan 3 - Print Positions 5, 15, 25, 35, etc., optioned respectively to characters 3, 7, 11, 15, etc.
Subscan 4 - Print Positions 7, 17, 27, 37, etc., optioned respectively to characters 4, 8, 12, 16, etc.
Subscan 5 - Print Positions 9, 19, 29, 39, etc., optioned respectively to characters 5, 9, 13, 17, etc.

During one odd print scan, all odd print positions have been given an option at one character of a given set. The maximum number of scans required to print all odd characters equals the character set size.

Printing Sequence - Model 2

The relationship of the distance between hammers to the distance between each character on the belt results in a printing sequence such that in any one subscan every fifth print position and every second type element are aligned. Starting with position one, this sequence continues until all the hammers to be selected during each subscan have had the option of firing. One full character set must pass print position one to ensure that all positions have been optioned to print.

The following is an example of the sequence of character/print options occurring in one scan or 5 subscans.

Subscan 1 - Print Positions 1, 6, 11, 16, etc., optioned respectively to characters 1, 3, 5, 7, etc.
Subscan 2 - Print Positions 3, 8, 13, 18, etc., optioned respectively to characters 2, 4, 6, 8, etc.
Subscan 3 - Print Positions 5, 10, 15, 20, etc., optioned respectively to characters 3, 5, 7, 9, etc.
Subscan 4 - Print Positions 2, 7, 12, 17, etc., optioned respectively to characters 4, 5, 8, 10, etc.
Subscan 5 - Print Positions 4, 9, 14, 19, etc., optioned respectively to characters 5, 7, 9, 11, etc.

The maximum number of scans required to print all characters equals the character set size.

PRINT TIMING – MODEL 1, 2 (ON MODEL 1 ALLOW 15 SUBSCANS FOR HAMMER SETTING F BETWEEN ODD AND EVEN SCANS 10.35 ms NOMINAL)

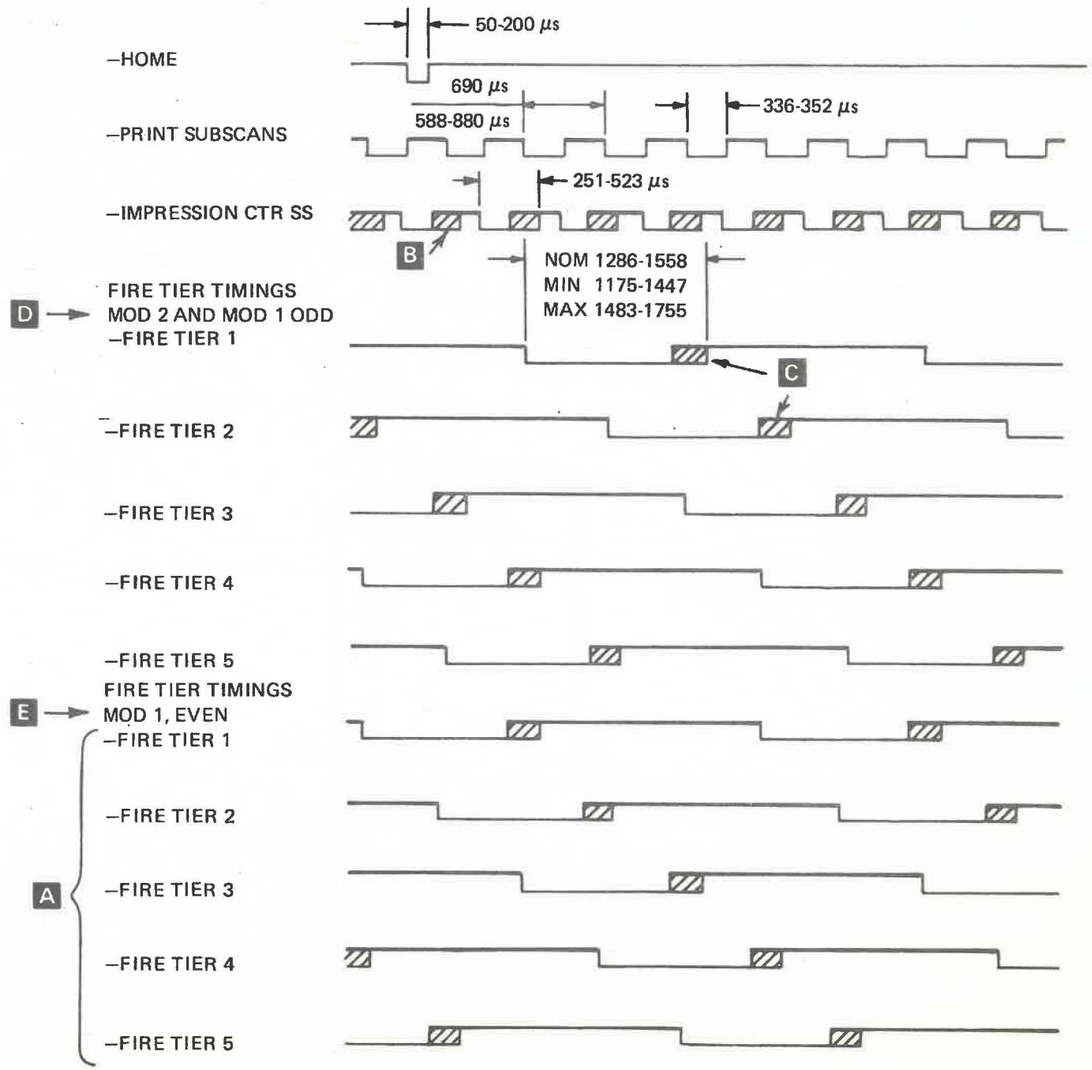

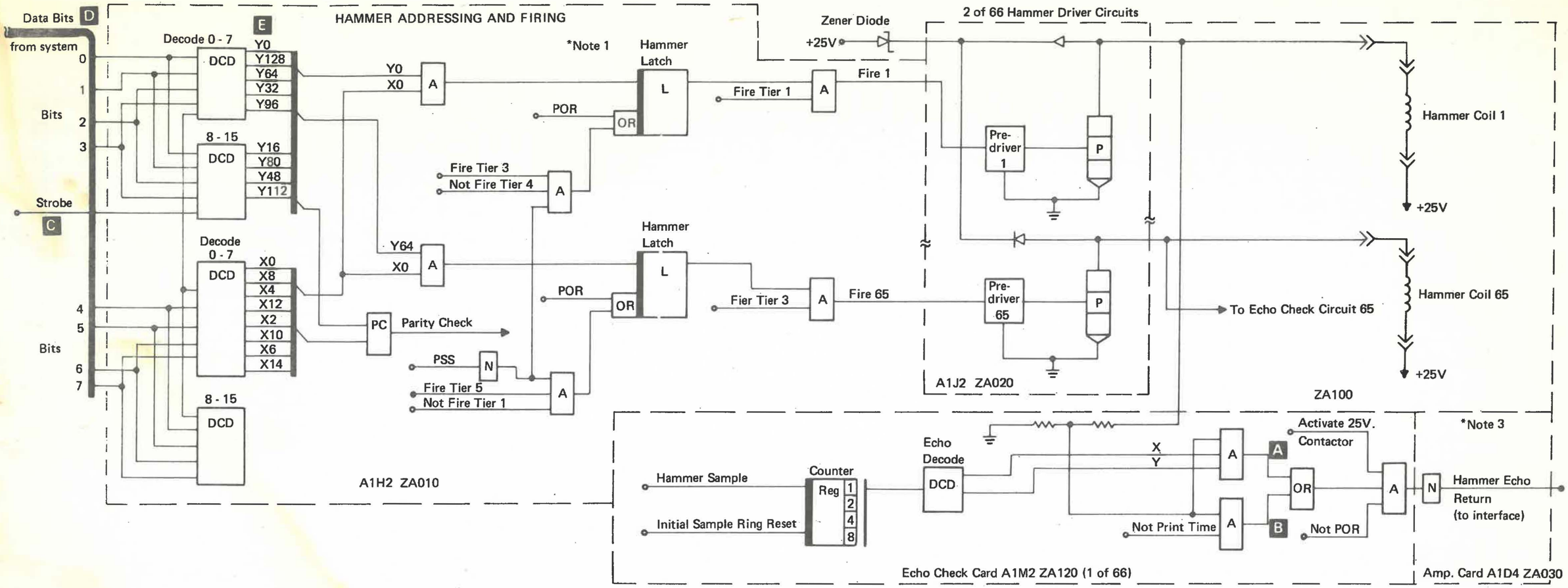

Note 1: This figure is for ease of understanding the Model 1, in positive logic. It does not represent actual logic.

Note 2: This chart represents the actual hammer decode lines.

Note 3: A Any Hammer On Check - an output when not print time.

B Hammer Echo Check - any incorrect output during print time.

Data Strobe

'STROBE' C is supplied by the using system and is used by the printer to validate the data bus transmitted by the host system. Data must be made active on the bus 0.6 microseconds minimum before strobe is made active. Data must remain active for 0.6 microseconds minimum after strobe is made inactive.

Hammer Fire Timing

The 5211 Printer Hammer Fire sequence uses a strobed 8 bit D interface plus a parity bit from the using system to determine which hammers are to be fired in each subscan or tier. The 8 bit interface is a transmission of the actual print position to be fired.

The 'Print Position' must be sent by the using system within 1.5 subscans prior to actual firing. The printer senses which hammer latches are to be turned on by decoding the Data Bits. E The system then provides 5 'Fire Tier' lines which determine the actual On time (including the impression control SS line - see 15-160) for each of the 5 Tiers. Any hammer whose latch was set on previously in that subscan, will be fired during this Fire Tier Time. The hammer Latch will be turned off by the printer within 3.5 subscans after it was turned on. Because the fire tier lines are used to generate resets to the hammer latches, the fire tier signal lines are active whenever the belt is running and not active when the belt is not running.

Model 1 *Note 2

	Y0	Y16	Y32	Y48	Y64	Y80	Y96	Y112	Y128
X0	1 2	17 18	33 34	49 50	65 66	81 82	97 98	113 114	129 130
X2	3 4	19 20	35 36	51 52	67 68	83 84	99 100	115 116	131 132
X4	5 6	21 22	37 38	53 54	69 70	85 86	101 102	117 118	
X6	7 8	23 24	39 40	55 56	71 72	87 88	103 104	119 120	
X8	9 10	25 26	41 42	57 58	73 74	89 90	105 106	121 122	
X10	11 12	27 28	43 44	59 60	75 76	91 92	107 108	123 124	
X12	13 14	29 30	45 46	61 62	77 78	93 94	109 110	125 126	
X14	15 16	31 32	47 48	63 64	79 80	95 96	111 112	127 128	

MODEL 1 - TYPE SELECTION

Subscan, Print Belt, and Print Position Relationship (Model 1)

1. Line 1 represents a portion of the hammer mechanism (hammers 1-10).
2. Line 2 represents print positions 1-20 printed by hammers 1-10.
3. Line 3 represents timing marks on the print belt. The solid marks are etched marks on the belt and the dotted marks are the electronically inserted pulses produced by the printer circuit. The first timing mark shown is an etched mark followed by three dotted marks. The center dotted mark is equivalent to the home pulse (absence of a timing mark pulse). This dotted mark is also subscan five, followed by subscan one, two, etc.
4. Line 4 represents the print belt and the relationship of the characters to the print positions in line two above.
5. The remaining lines indicate print belt sequence and the position of the characters in the scanning process.

The five subscans represent either odd or even print positions. To match a character to a subscan, align the character with one of the print positions. When it aligns with a print position, the column on the left (SS1 to SS5) shows on which subscan the character is printed. The character is optioned to print on the previous subscan. Even print positions are optioned and printed on even scans; odd positions are optioned and printed on odd scans.

Examples:

1. Character 2 in line 6 is printed in SS3 but optioned in SS2 (odd print position, odd scan).
2. Character 6 in line 8 is printed in SS5 but optioned in SS4 (even print position, even scan).

Note that every tenth position is aligned to print; for example: 1, 11, 21 etc., 2, 12, 22 etc.

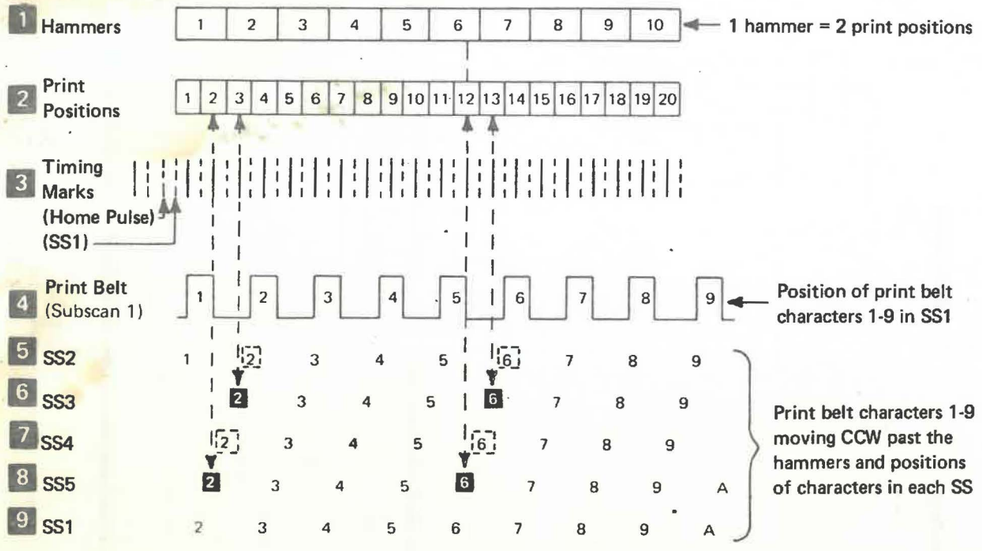

Scanning Sequence (Model 1)

The figure shows the print belt passing the transducer and the sequence of scanning, starting after home pulse. Each set of scans is repeated until all characters on the print belt have been optioned to print in each print position. For a 48 character-set print belt, there are 96 print scans: 48 even and 48 odd, plus three between odd and even scans, for hammer settling.

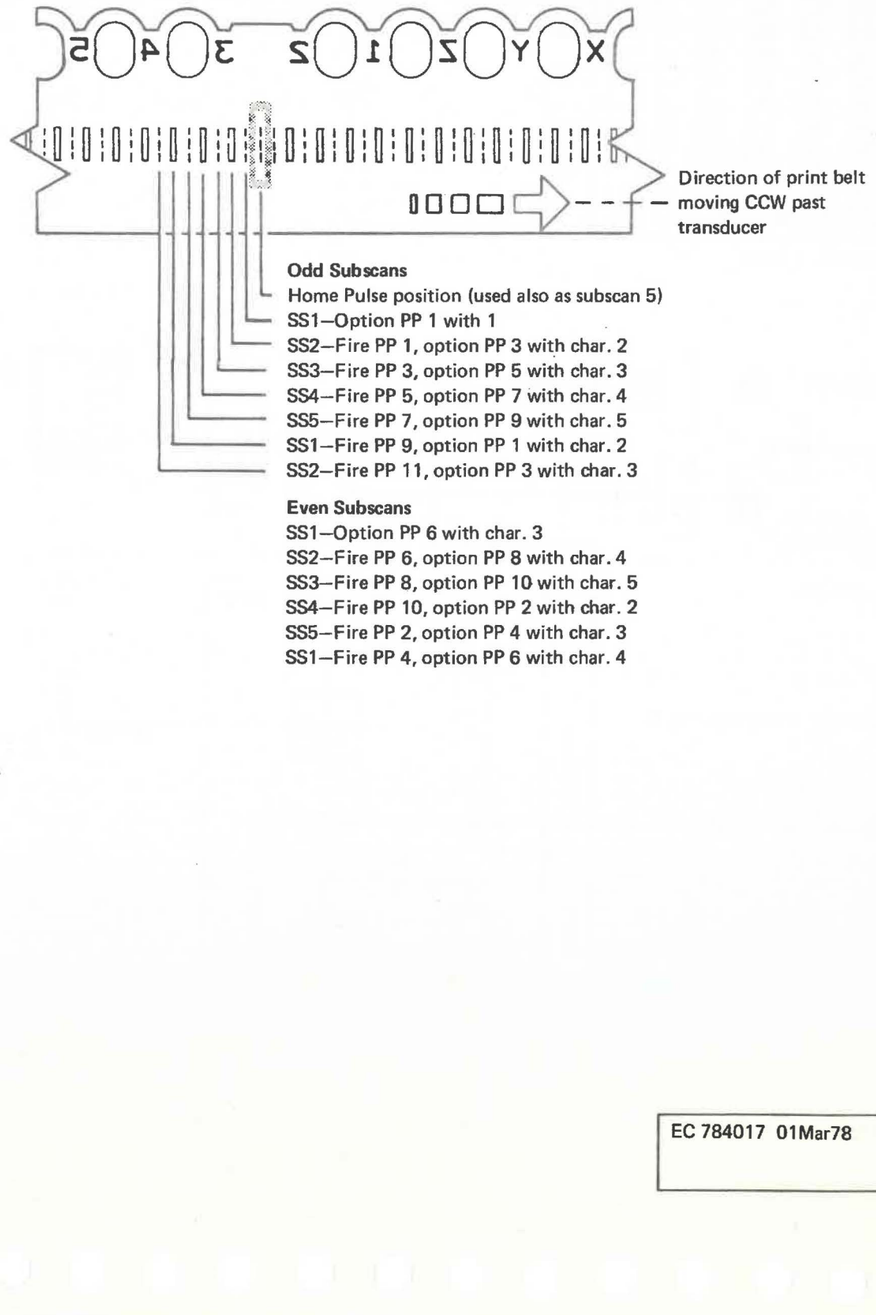

MODEL 2 - TYPE SELECTION

Subscan, Print Belt, and Print Position Relationship (Model 2)

1. Line 1 represents print positions 1-20 printed by hammers 1-20.
2. Line 2 represents timing marks on the print belt. The solid marks are timing marks on the belt and the dotted marks are the electronically inserted pulses produced by the printer circuits. The first timing mark shown is followed by the three dotted marks. The center dotted line is the same as to the home pulse (absence of a timing mark pulse). This dotted mark is also subscan five, followed by subscan one, two, etc. (SS1, SS2).
3. Line 3 represents the print belt and the relationship of the characters to the print positions in line 2 above.
4. The remaining lines indicate print belt sequence and the position of the characters in the scanning process.

   To match a character to a subscan, align the character with one of the print positions above. When it aligns with a print position, the column on the left (SS1 to SS5) shows on which subscan the character is printed. The character was optioned to print on the previous subscan.

Examples:

1. Character 2 in line 5 is printed in SS3, but was optioned in SS2.
2. Character 6 in line 7 is printed in SS5, but was optioned in SS4.

Note that every fifth position is aligned to print; for example:
1, 6, 11, 16, 21, 26, etc.,
2, 7, 12, 17, 22, 27, etc.

Line Numbers

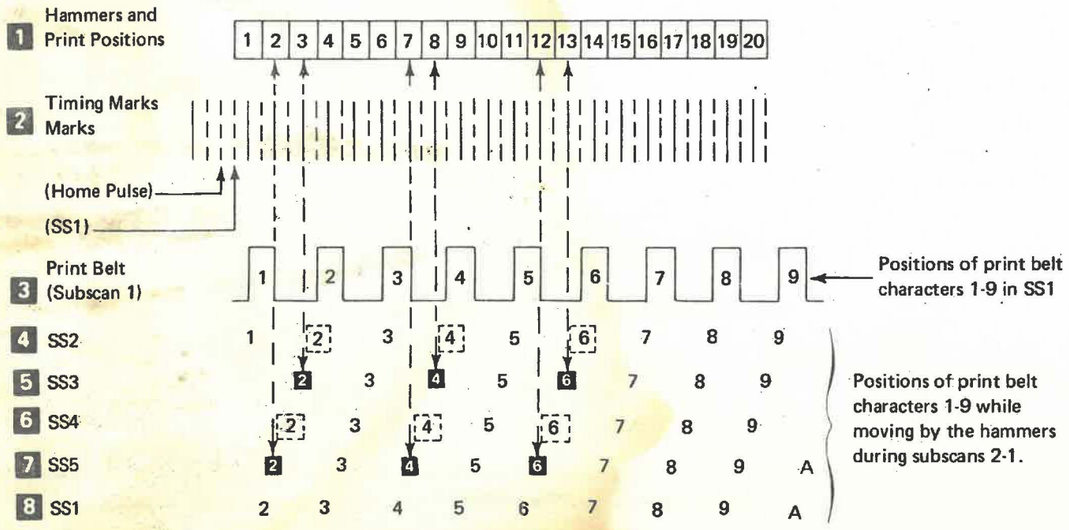

Scanning Sequence (Model 2)

The figure shows the print belt passing the transducer and the sequence of scanning starting after home pulse. Each set of scans is repeated until all characters on the print belt have been optioned to print in each print position. For a 48-character-set print belt, there are 96 print scans. 48 even and 48 odd, plus 3 between odd and even scans for hammer settling.

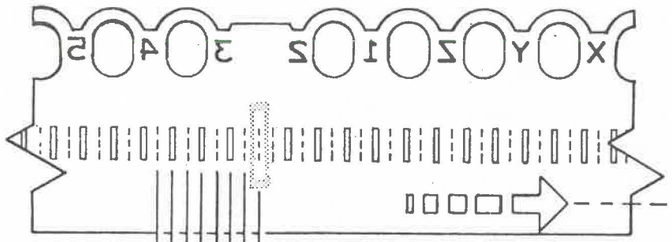

Print Subscans
Home Pulse position (used also as subscan)*

SS1-Option PP1 with char. 1	-Option PP6 with char. 3
SS2-Fire PP1, Option PP3 with char. 2	-Fire PP6, Option PP8 with char. 4
SS3-Fire PP3, Option PP5 with char. 3	-Fire PP8, Option PP10 with char. 5
SS4-Fire PP5, Option PP2 with char. 2	-Fire PP10, Option PP7 with char. 4
SS5-Fire PP2, Option PP4 with char. 3	-Fire PP7, Option PP9 with char. 5
SS1-Fire PP4, Option PP1 with char. 2	-Fire PP9, Option PP6 with char. 4
SS2-Fire PP1, Option PP3 with char. 3	-Fire PP6, Option PP8 with char. 5

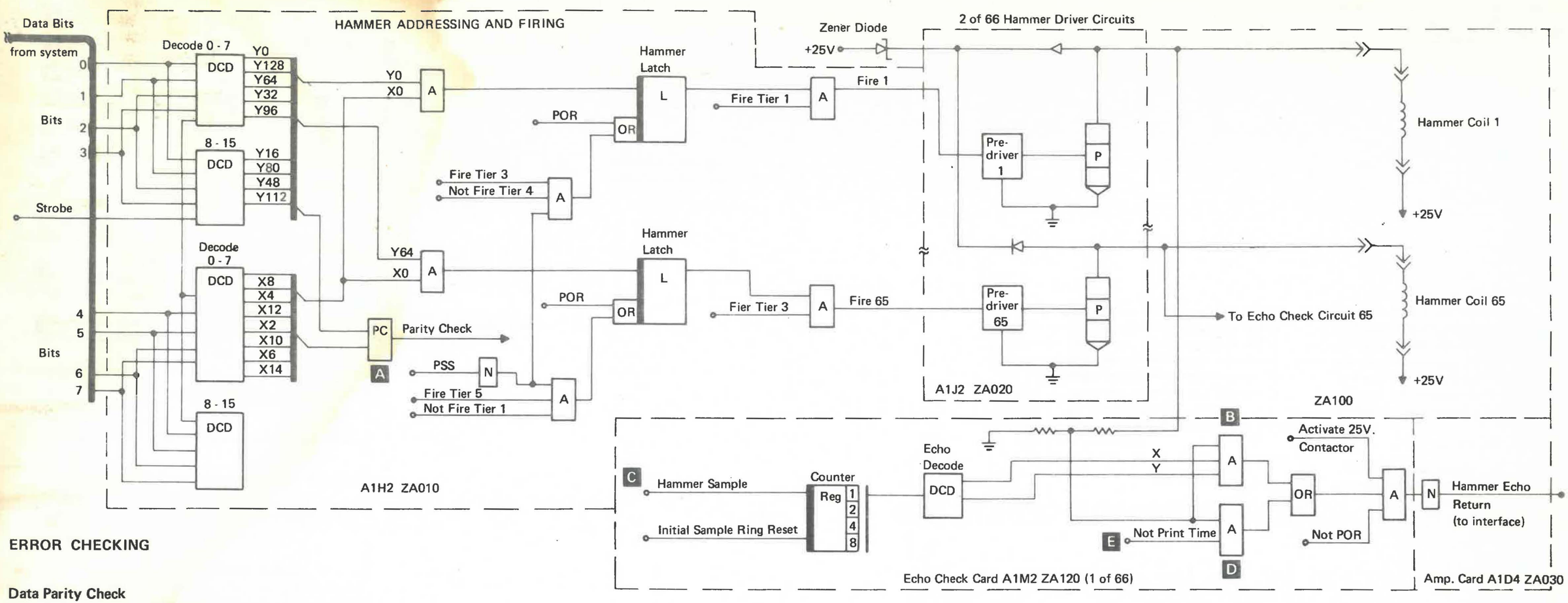

ERROR CHECKING

Data Parity Check

The printer provides odd parity checking of the hammer position data bits. When an even parity condition is decoded A out of the parity check circuit, a latch is turned on when data strobe is active. The data parity check is valid on the interface 500 nanoseconds after strobe becomes active. The check indicator must be turned on when the data parity error is sensed.

Hammer-On Echo Check B

The Printer Hammer Control Logic includes built-in Serial Hammer Echo Check circuitry whereby the using system checks the status of every hammer to determine its on or off state. During print time, the system transmits a burst of 133 pulses on one interface line (Hammer Sample). C The Hammer Sample pulses are transmitted no earlier than 10 μs after the start of the leading edge of PSS, or no earlier than 20 μs after the Impression Control Single Shot goes inactive, whichever comes later. This allows the echo counter in the printer to be reset at PSS time. Checking must be complete by the next leading edge of the PSS pulse or the trailing edge of the single shot, whichever comes earlier. This string of pulses is decoded serially by the printer logic. The first pulse is not used for hammer interrogation, therefore, it will not be returned on the Hammer Echo return line.

On a Model 2 printer, a pulse is returned for each hammer position fired, starting with the second sample pulse which addresses hammer position 1, through the 133rd pulse, which addresses position 132. Because there are only 66 hammers in the Model 1, the second sample pulse addresses print positions 1 and 2. The 132nd sample pulse addresses print positions 131 and 132. There is no response on the echo return to the odd sample pulses, i.e.; 1,3,5. . . 131,133. The odd pulses do not address any hammer positions in the Model 1 printer.

Hammer-Off Checking—Not Print Time D

The circuits utilized for the Hammer-On Echo are also utilized for any Hammer-On check when the printer is not printing. The printer provides Not Print Time line E by monitoring the data transmission from the using system to the printer. While this line is active, the fact that any hammer coil is On is transmitted back to the using system on the Hammer Echo line, allowing them to open the 25V contactor. The 'Not Print Time' signal goes inactive at the time the first strobe signal is setting a hammer latch. If strobe is not active for a period of five print subscan pulses, the Not Print Time signal becomes active.

Model 1 *Note 2

	Y0	Y16	Y32	Y48	Y64	Y80	Y96	Y112	Y128
X0	1 2	17 18	33 34	49 50	65 66	81 82	97 98	113 114	129 130
X2	3 4	19 20	35 36	51 52	67 68	83 84	99 100	115 116	131 132
X4	5 6	21 22	37 38	53 54	69 70	85 86	101 102	117 118	
X6	7 8	23 24	39 40	55 56	71 72	87 88	103 104	119 120	
X8	9 10	25 26	41 42	57 58	73 74	89 90	105 106	121 122	
X10	11 12	27 28	43 44	59 60	75 76	91 92	107 108	123 124	
X12	13 14	29 30	45 46	61 62	77 78	93 94	109 110	125 126	
X14	15 16	31 32	47 48	63 64	79 80	95 96	111 112	127 128	

THIS PAGE INTENTIONALLY LEFT BLANK

RIBBON

INTRODUCTION

The ribbon is mounted in the printer so that it goes between the print belt and the forms [A] . Mounted under each ribbon reel [B] is a stepper motor that drives the ribbon either left or right. A drag signal is applied to the motor that is not being driven to keep tension on the ribbon. Ribbon motion always starts before a printing cycle and stops soon after printing is completed. Automatic ribbon reversal is accomplished whenever a ribbon reel is nearly empty.

RIBBON DRIVE

The Right Go latch [C] is always activated after a 'P. S. POR' is applied. This latch selects the right motor drive circuit. There is no ribbon movement, however, until a 'Carriage Busy Latch' signal [D] is received. This signal is active following a 'Carriage Go' from the system and remains active until after the carriage has stopped.

'Carriage Busy Latch' sets the Run latch [E] if the belt is up to speed. The outputs from the Run latch and the Right Go latch are ANDed to develop the 'Left Drag' signal. When the Run latch is active, Gate Motor Drive latch is activated with 'B-Time'.

The frequency and duration of the drive pulses to the ribbon motor are determined by the signal coming from the Osc Out register [F] . The input to this register is developed within the ribbon circuit. The decode of the speed register (15-240), establishes the time on the 'Osc Out' line so the drive pulses to the drive motor occur every 6.144 milliseconds or 167 times per second. The decode can also be set by activating the 'Low Speed Select' line (15-240), to change the motor drive to 122 steps per second.

These pulses are used to establish the condition of the A and B outputs from the two flip flops that make up Ribbon Right [G] . The four outputs from these flip flops are fed through drivers and are sent to the right drive motor.

The pulses continue to be developed and the ribbon continues to run as long as the Run latch remains active and POR has not been recieved.

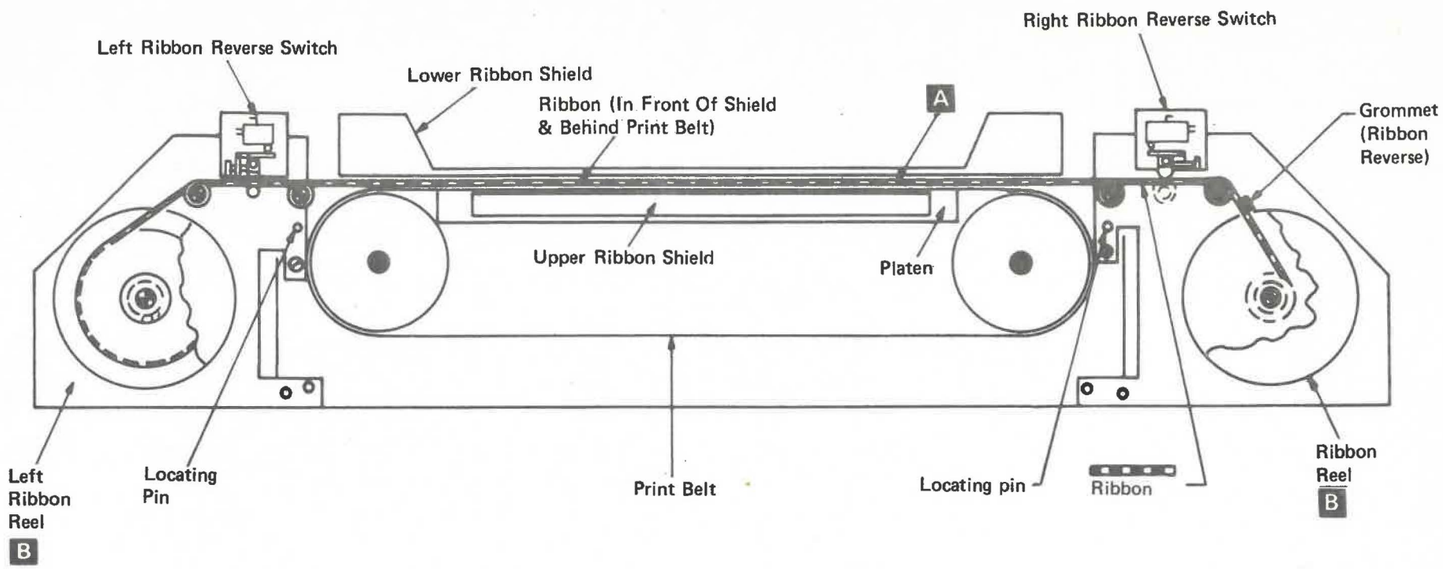

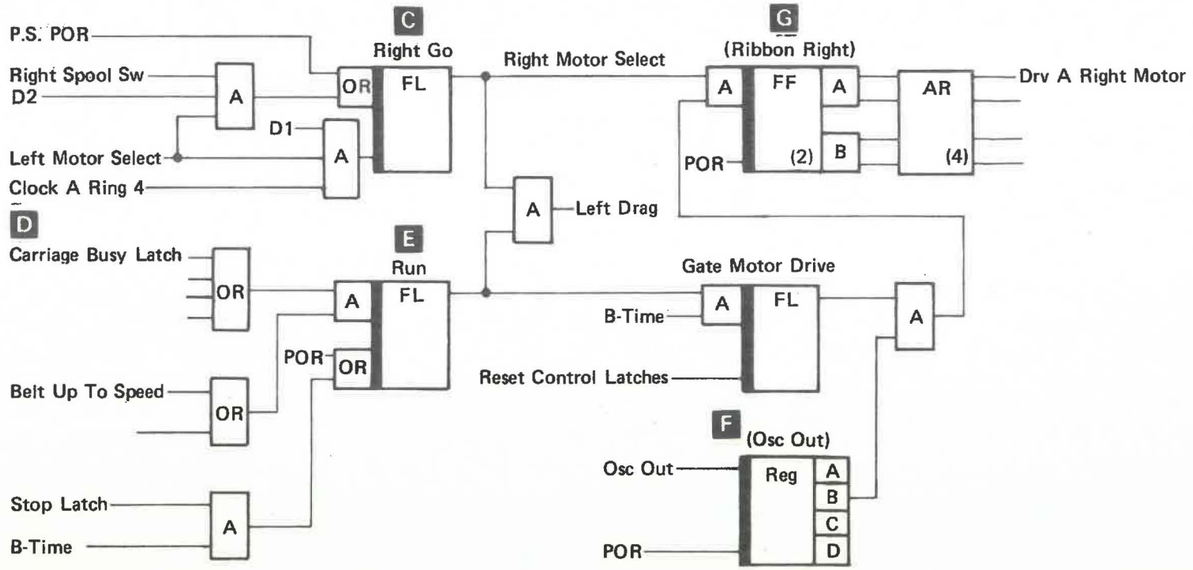

RIBBON STOP

The output from the Gate Motor Drive latch activates the Start Time Out latch A with 'C-Time', 22 milliseconds after Gate Motor Drive latch is activated (with 'B-Time'). Allow Check latch B is then activated and also a signal is sent to the input circuit of the Allow Stop 1 latch C .

Allow Stop 1 latch is activated at 'D1' time, provided 'Set Run Latch' line is not active. Typically this would be as soon as 'Carriage Busy Latch' becomes inactive. With Allow Stop 1 latch active and Allow Stop 2 latch not active, the BC Time Counter D is reset to 'B-Time' inactive, which in turn resets 'C-Time' to inactive.

At D3 time 'Allow Stop 2' is activated and sends a signal to the input circuit of Stop latch. Because Allow Check latch is active, Stop latch becomes active when 'C-Time' becomes active again. The 'Stop Latch' line is combined with 'B-Time', to reset the Run latch and deactivate the 'Run Latch' line E . When the 'Run Latch' line is not active all ribbon motion stops and the control latches are reset with the reset line F .

RIBBON REVERSAL

When the left ribbon reel is nearly empty a grommet on the ribbon pushes against and closes the left ribbon reverse switch and activates the 'Left Spool Sw' line G .

'Right Motor Select' H is still active when the 'Left Spool Sw' signal becomes active, so Left Go latch energizes at D0 time developing the 'Left Motor Select' line J .

At this time both the 'Right Motor Select' and 'Left Motor Select' lines are active so steps are taken to temporarily stop the ribbon and stop incoming print data during this reversal time.

When both select lines are active, the 'Reset Control Latches' line F and the Busy latch K are activated. The 'Reset Control Latches' line resets the timing (N-Time Counter) L and resets the Gate Motor Drive latch which prevents pulses from the 'Osc Out Latch' line M from being sent to drive the ribbon motors.

When Busy latch K is active, a 'Printer Busy' signal is sent to the system preventing any print information from being sent to the printer.

After the 'Left Motor Select' line becomes active, it is gated through an AND at a portion of 'D1' time (as a result of 'Clock A Ring 4') and deactivates the Right Go latch N .

When the N-Time Counter reaches '20 Time' (about 11 milliseconds), 'B-Time' is activated and the Gate Motor Drive latch becomes active again.

Left drive pulses are now developed the same as described in "Ribbon Drive" (15-220) and the direction of the ribbon is reversed.

The Busy latch K is deactivated with 'C-Time' about 22 milliseconds after 'B-Time' is active, thus signalling the system that the printer is ready to receive print data again.

CHECK CIRCUITS

When a ribbon select line (right or left) becomes active, a check is made to assure the ribbon moves within a normal time. If the 'Right Motor Select' H becomes active, the ribbon should move a signal developing in the left spool ('L Ribbon Check' P) that indicates ribbon motion.

The combination of 'Right Motor Select' and 'L Ribbon Check' in an AND form the 'Gated Amp' line Q . This line is delayed at least 128 microseconds by the Amp latch circuit and is sent to reset the Slow Check latch R .

If the Slow Check latch had not been reset, a signal is sent to the Ribbon Check latch 44 to 87 milliseconds after 'Allow Check' becomes active. This 'Ribbon Check' signal S is sent to the system indicating incorrect ribbon motion.

A 'Ribbon Check' is also developed if there is an output from the compare circuit T . This circuit checks to make sure the set line to either a Right Go or Left Go latch and the opposite spool switch signal are not both active at the same time. Example: If 'Right Spool Sw' U and 'Set Left Go' V are both active at the same time, the 'Ribbon Sw Check' line becomes active causing the Ribbon Check latch to become active.

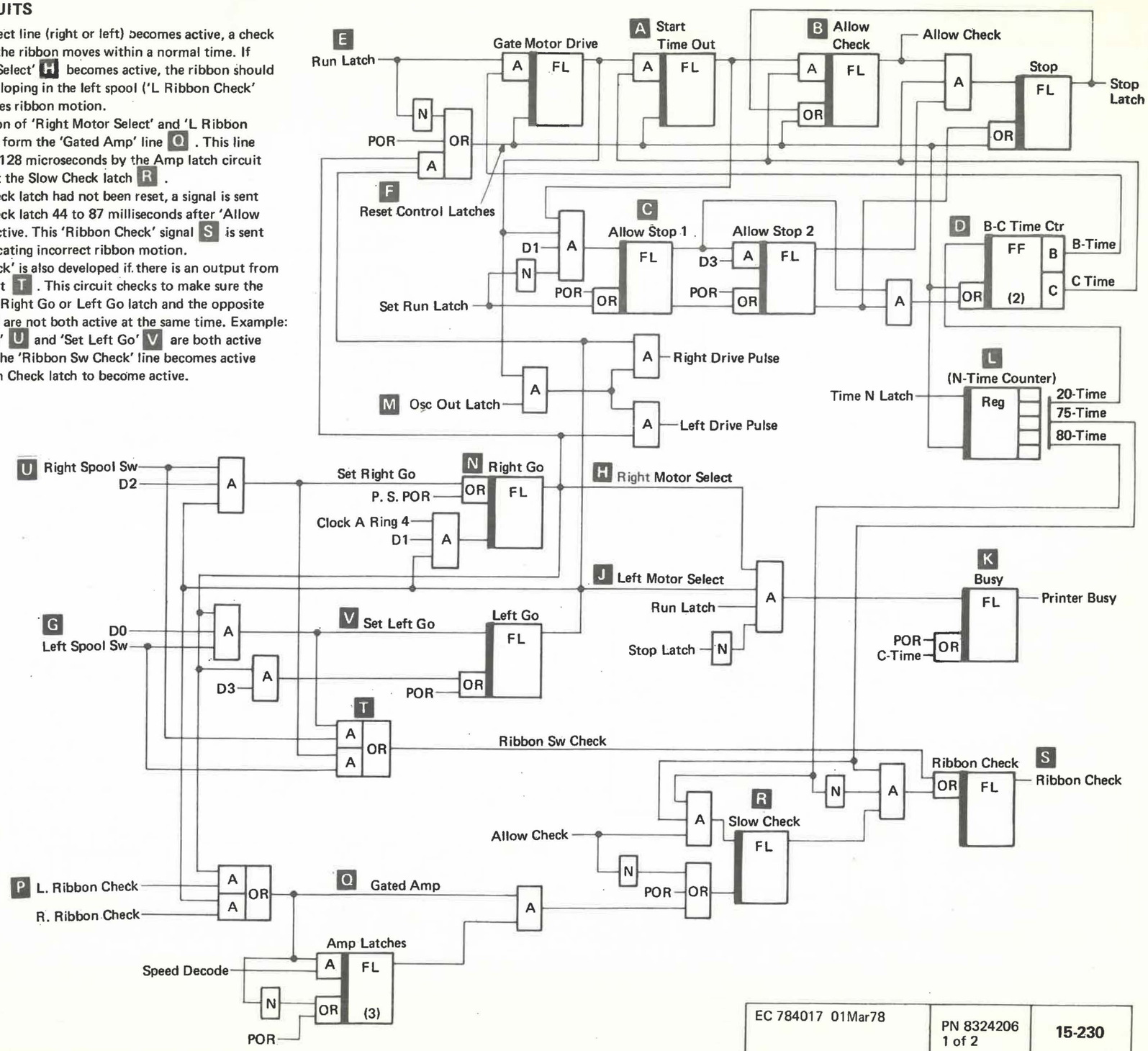

RIBBON – CIRCUIT

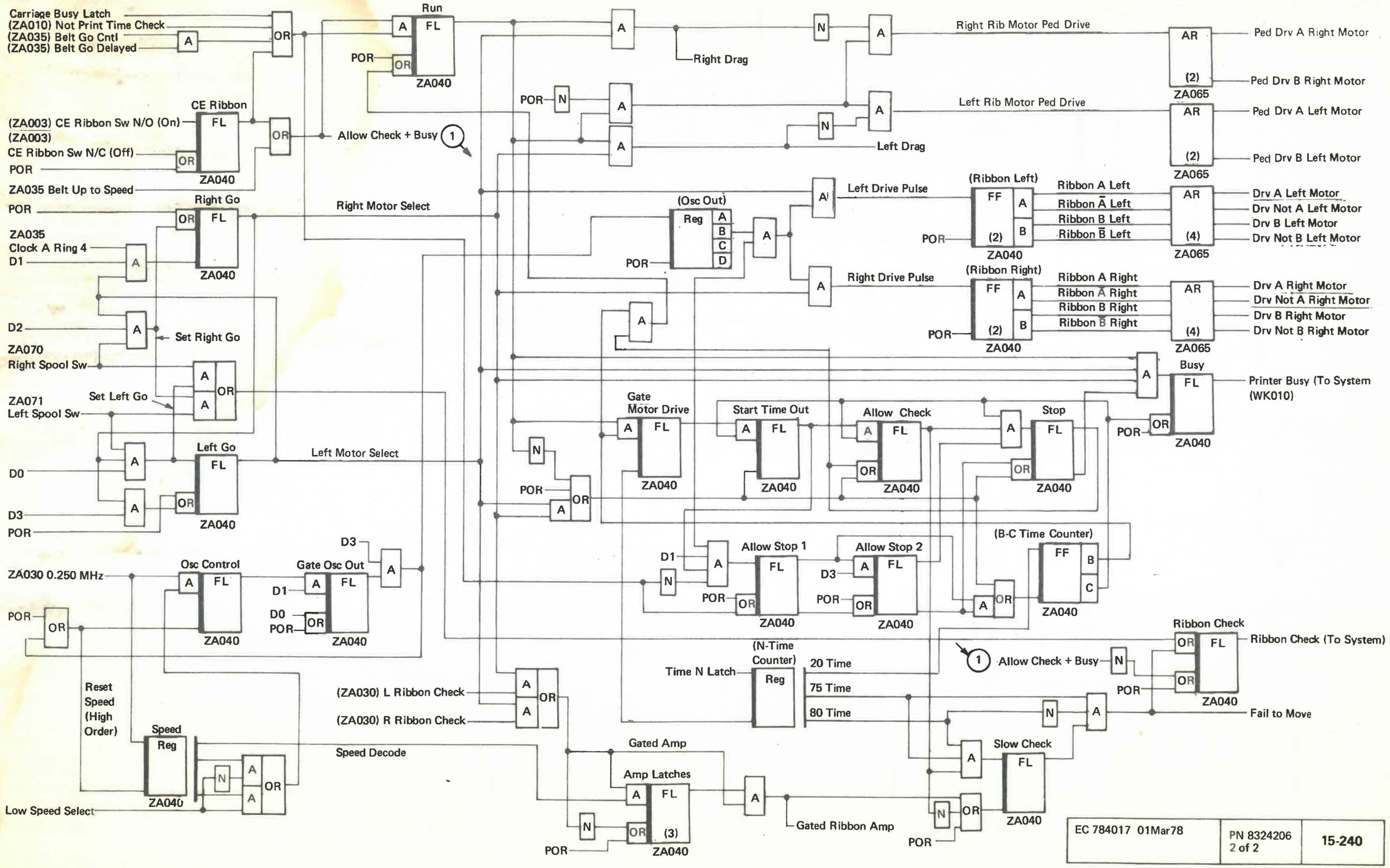

EC 784017 01Mar78	PN 8324206 2 of 2	15-240

FORMS PATH

INTRODUCTION

Continuous forms are passed from the load compartment A, between the hammers and the ribbon, past the tractors and are stacked in a stacker compartment H at the rear of the printer.

The following functional areas of the forms path are briefly described in the following paragraphs:

- Forms Load Compartment A
- Forms Entry Guides B
- End-of-Forms Switch C
- Tension Fingers D
- Paper Clamp E
- Forms Tractors F
- Tinsel G
- Stacker Compartment H

For more detail of the print area and tractors, see "Carriage", (15-270). For removal and replacement of parts, see "Forms Path," Section 7, 7-000.

FORMS LOAD COMPARTMENT A

The forms load compartment holds a stack of forms up to 320 mm (12.5 inches) high.

FORMS ENTRY GUIDES B

There are two forms chute guides at the top of the forms load compartment that are used to align the forms as they enter the forms path.

END-OF-FORMS SWITCH C

The End-of-Forms switch senses the absence of forms in the forms chute. It closes when approximately 318 mm (12.5 inches) of forms remain below the print line and a signal is sent to the system. This signal turns on the Forms light in the printer and indicates to the system to finish the command in process, stop the carriage, and turn off the Ready light. This signal remains active as long as there is less than the above amount of paper in the forms path.

If the command in process contains an operation with a carriage skip of four or more lines, the carriage must be stopped within 4 lines to allow operator access to the last form within the forms chute. The operator has the option of completing the remaining forms by depressing the Ready key causing the printer to print and advance until the next line 1 occurs. At this time, it becomes Not Ready (the Ready light turns off).

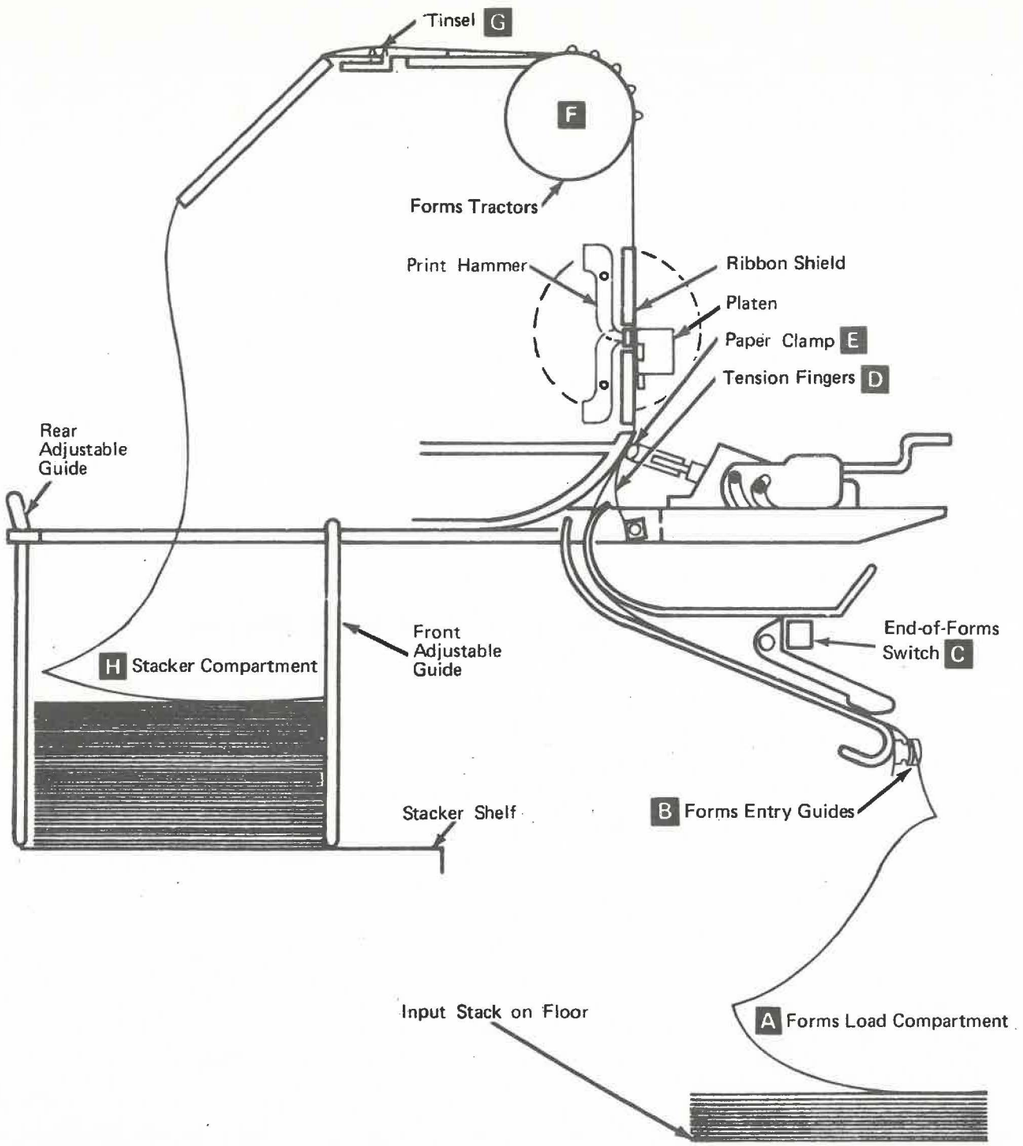

TENSION FINGERS D

These 6 fingers are located in the forms path before the paper clamp. The fingers ride against the forms and provide a drag to keep the forms under tension through the paper clamp and print unit areas.

The tension on each finger is adjustable by turning a threaded shaft into a clevis. See "Forms Path", Section 7, 7-000.

PAPER CLAMP E

The paper clamp is a solenoid-operated device used to hold the forms so no lateral motion occurs while a line is being printed. This clamp is moved against the paper by a solenoid that is controlled by the 'Activate Paper Clamp' signal from the printer. This clamp signal must be deactivated 6.1 to 7.2 milliseconds before activating 'Carriage Go'. It must be activated within 10 microseconds of the end of 'Carriage Go' or not later than 10 milliseconds before initiation of printing when no carriage motion takes place.

FORMS TRACTORS F

The two pin-feed tractors, mounted on a motor/belt-driven shaft, move the forms through the printer. For more detail, see "Carriage Drive, Tractors" (15-270).

TINSEL G

There is a piece of tinsel strung across the forms path to touch the forms as they pass through the printer. This tinsel removes the static charge on the forms after printing.

STACKER COMPARTMENT H

The stacker compartment, at the rear of the printer, holds the forms after printing. The adjustable front and rear stacker guides may be moved forward and backward to allow forms of various lengths to stack properly. The rear guide pivots so forms can be removed.

THIS PAGE INTENTIONALLY LEFT BLANK

CARRIAGE

INTRODUCTION

The IBM 5211 Printer has a tapeless carriage consisting of the following functional units: carriage stepper motor, carriage feedback emitter assembly, tractors, and control logic. The carriage moves continuous forms through the printer. Spacing and skipping of the forms is controlled by the system. Skipping may be done up to 508 mm (20 in.) per second.

Note: For removal and adjustment procedure, see "Carriage," Section 8, 8-000.

A signal from the system initiates the movement of forms by gating the first carriage advance pulse from the control circuit. This motor control logic continues to provide pulses to the drive motor until the forms have advanced the proper distance as specified by the system via a 'Carriage Go' signal. At this time, the last three drive pulses are delayed to slow the forms down before being stopped. A small detent current holds the carriage motor in the stopped position.

There are three carriage error conditions sensed by the using system. When any of these conditions occur, the system turns on the Check light and the Forms light on the printer, and turns off the Ready light. The error conditions are as follows:

- *Carriage Check 1* – This check occurs if there are missing or extra carriage advance pulses during a carriage operation.
- *Carriage Check 2 – (Single Space)* This check occurs if the timing between the deactivation of the paper clamp pulse and the deactivation of the paper settling pulse within the system exceeds 34 ms, three or more times during the printing of one page (line 1 to line 1).
- *Forms Jam Check* – The system indicates a forms jam if the signal 'Forms Pulse' is not sensed within the distance of 4 to 6 holes (2 to 3 inches) of forms movement.

CARRIAGE DRIVE

Tractors

Two pin-feed tractors A move forms through the printer. Each tractor has a cover that holds the forms onto the tractor pins. Hand operated levers B, located at the bottom of each tractor, are used to horizontally position the tractors to accommodate various form widths. The left tractor houses a forms motion sensing assembly. When no holes are sensed within approximately 40 to 90 mm (1-1/2 to 3-1/2 in.) of carriage motion, the system detects that forms are not moving properly and the not-ready condition is set.

The forms advance knob C is attached to the left end of the tractor shaft. Turning this knob provides coarse vertical adjustment of the forms. For fine vertical adjustment, press the knob in (toward the right) and turn. This adjustment should be made only when the printer is not printing.

Carriage Motor

The tractors are driven by the carriage motor via a drive belt. This stepper motor is driven by 'Carriage Advance Pulses' developed by the control logic in the printer.

Feedback Circuit

There is a feedback timing disk D mounted on the end of the motor shaft. Slots on this disk, along with a light emitting diode (LED)/phototransistor circuit, provide 'Carriage Feedback' pulses when the disk is turned. These pulses are used to develop the second and following 'Carriage Advance Pulses' that drive the carriage.

Carriage Detent

This is accomplished electrically by having a small current flow through a resistor network and two of the carriage motor coils because there are always two of the carriage stepper motor drive lines active. Therefore, current flows through the two coils and limiting resistors to +25V. When the carriage advances, the resistance is effectively reduced by the 'Ped Drive' lines before drive pulses are applied to the carriage motor.

SYSTEM CONTROL

The system program controls all printing and forms movement. 'Carriage Go' is provided by the system and is used to set the circuits to generate the 'Carriage Advance Pulses' which are used to drive the carriage motor.

Forms Spacing

Forms spacing of either 6 or 8 lines per inch is possible by setting the 6LPI/8LPI switch on the operator's panel or by program control. It takes 48 advance pulses to move the forms one inch; therefore, if set on 6 lines per inch, 8 pulses are needed to move the form one line space. If set on 8 lines per inch, six pulses are needed for one line space.

The last three advance pulses of the last line to advance are provided by the 5211. These pulses, called stop pulses, slow the carriage motor down because they are delayed from the normal drive pulses.

Forms Skipping

Forms skipping is just a continuation of spacing and may be done up to 508 mm (20 in.) per second. The system always directs the printer (via the 'Carriage Go' signal) to stop skipping one line short of the required amount. The additional line is advanced as a one-line space.

Forms Control Buffer (FCB)

The forms control buffer in the system is loaded with the number of lines that are on the forms to be used. The line count is updated by the 'Carriage Advance' as the carriage moves the forms. This buffer takes the place of a carriage tape.

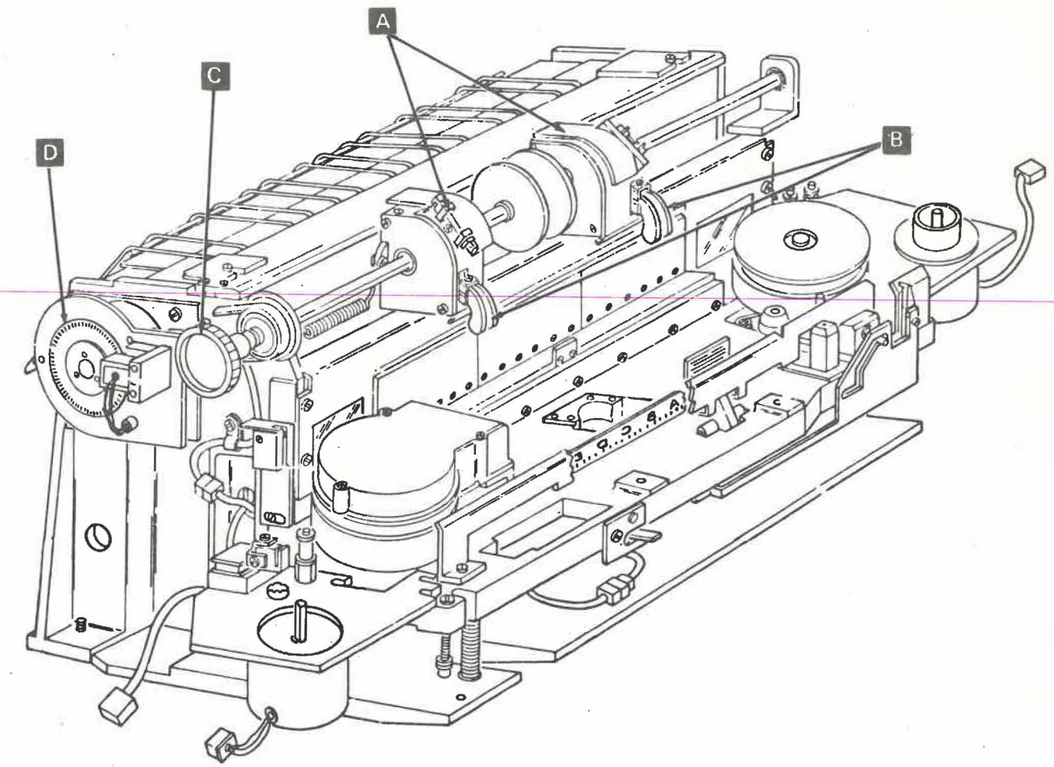

CARRIAGE MOTOR CONTROL DIAGRAM

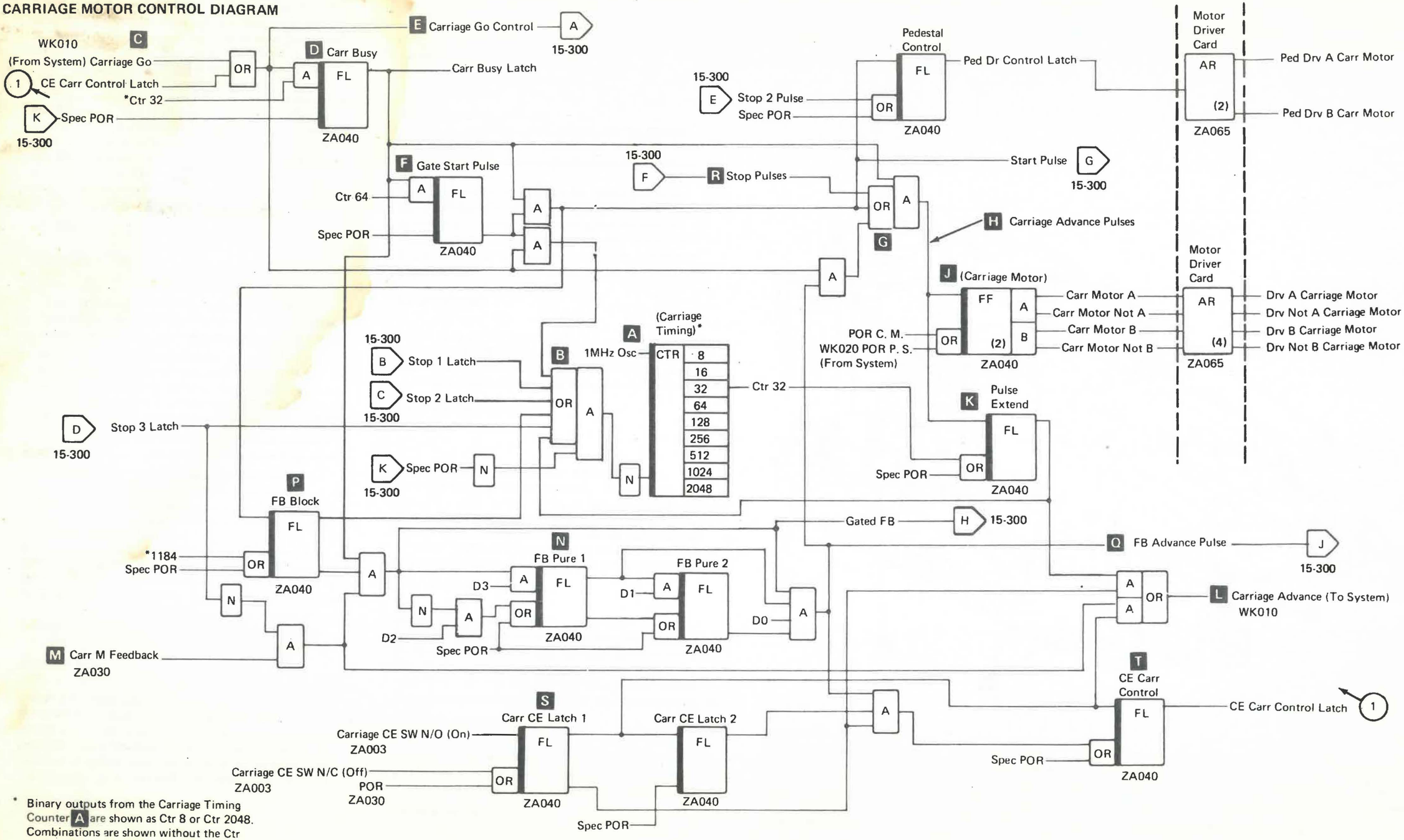

* Binary outputs from the Carriage Timing Counter A are shown as Ctr 8 or Ctr 2048. Combinations are shown without the Ctr prefix. Example: 704 = Ctr 512 + Ctr 128 + Ctr 64.

CARRIAGE MOTOR CONTROL

Circuit Timing

The timing for this circuit depends upon the Carriage Timing counter A . This binary counter circuit is unique in that any input to the OR B will allow the counter to run. When no signals are present, the counter is reset. Any time 'Spec POR' is active, signals are not gated to the counter and the counter is reset.

Initial Carriage Advance Pulse

'Carriage Go' C from the system activates the Carriage Busy latch D after a delay of 32 microseconds. The counter A was started when 'Carriage Go Control' E was ANDed with the not output from the 'Gate Start Pulse Latch' F .

'Carriage Busy Latch' and not 'Gate Start Pulse Latch' are ANDed and fed through an OR G to develop a signal 'Carriage Advance Pulses' H . This signal drives the Carriage Motor flip flops J that pulse the carriage motor. See timing chart of motor phase sequence below. The signal on the 'Carriage Advance Pulses' line H also activates the Pulse Extend latch K that produces a 32-microsecond 'Carriage Advance' pulse L so the system can keep track of the carriage motor advance pulses.

Further 'Carriage Advance' Pulses

When the motor turns, the feedback timing disk moves and a 'Carr M Feedback' pulse M is generated by an LED/ phototransistor circuit and used to initiate the next carriage motor advance pulse.

'Carr M Feedback' is gated to the input circuit of the FB Pure 1 latch N because 'Carriage Busy' D is still active and the FB Block latch P turned off at 1184 time. At 'D3' time FB Pure 1 latch is activated conditioning FB Pure 2 latch to turn on at 'D1' time. Before that happens, 'D0' gates 'FB Pure 1', not 'FB Pure 2', and 'Gated FB' to develop a 'FB advance Pulse' O .

This advance pulse ANDed with 'Carr Go Control' E is fed to the OR circuit G . This signal and 'Carr Busy' D are used to generate the second pulse on the 'Carriage Advance Pulses' line H and the motor is stepped again. Carriage advance pulses continue to be developed in the same manner until 'Carriage Go' is deactivated.

After 'Carriage Go' becomes inactive there are three additional advance pulses developed, each with an increasing time lag so the carriage slows before it stops. This is done by having 'Carriage Busy' gating 'Stop Pulses' R to develop the 'Carriage Advance Pulses'. See "Stop Pulse Development", (15-300).

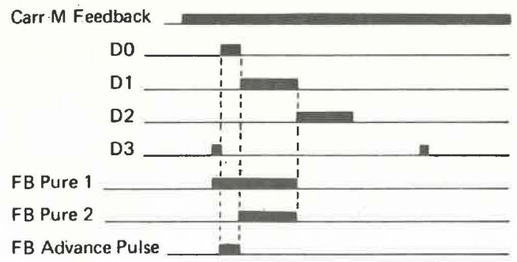

MOTOR PHASE SEQUENCE TIMING CHART

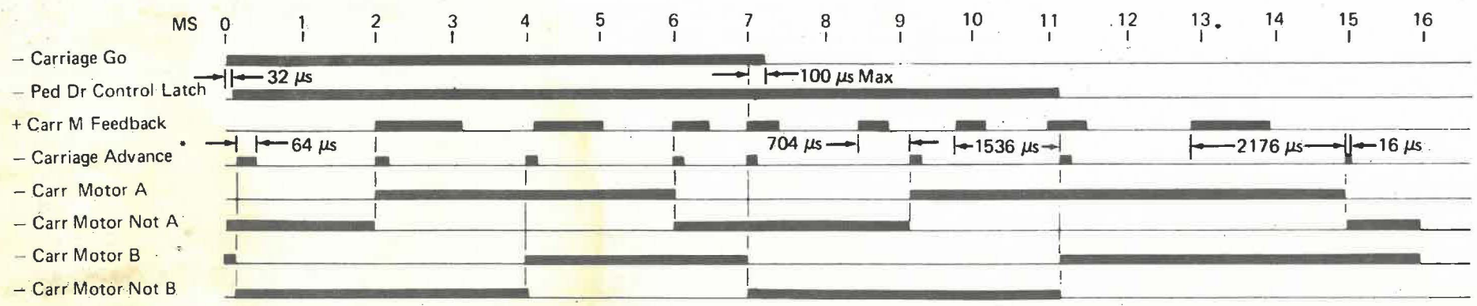

* The time of the first and last Carriage Advance pulses are indicated, all others are 32 µs.

Note: All Carr Motor pulses may be 180° from as shown.

Stop Pulse Development

These stop signals are developed as follows: After 'Carriage Go' becomes inactive, it causes 'Carriage Go Control' to become inactive. The next 'Gated FB' pulse A starts the FB Stop Counter B which had been reset with a 'Start Pulse' when the first carriage advance pulse was developed. This binary counter advances with each 'Gated FB' and develops pulses used to set the three stop latches. Each time a stop latch is activated, the Carriage Timing counter (15-280) is reset. Because the counter operates at 1 MHz, 704 and 720 will be the number of microseconds after Stop 1 latch becomes active.

An FB Stop Counter decode of 2 (2 feedback pulses) and the next 'FB Advance Pulse' C turn on Stop 1 latch. This resets the Carriage Timing counter (15-280) so a 'Stop Pulse' D is developed 704 microseconds later. This is a 16-microsecond pulse because Stop 1 latch was reset at 720 time. This 'Stop Pulse' is used to develop the next carriage advance pulse. Because this advance pulse was delayed by 704 microseconds the motor slows down. See "Motor Phase Sequence Timing Chart" (15-290).

A decode of 3 turns on Stop 2 latch, resets the counter again, and gates another 16-microsecond pulse to the motor via the 'Stop Pulses' signal at 1536 time further slowing the motor.

The Pedestal Control latch (15-280) is reset when 'Stop 2 Pulse' E is activated which deactivates the 'Ped Dr Control Latch' line removing the pedestal voltage from the drive motor. This forces the motor to slow down even more with the following advance pulse.

The next advance pulse is developed following the development of the 'Stop 3 Latch' pulse. This pulse is active after a decode of 5 (5 feedback pulses). At 2176 microseconds later, a signal is placed on the 'Stop Pulses' line and is used to make another carriage advance pulse. Because of the increased delay, the carriage motor is slowed even more.

Also at this time, the Precycle End latch F is activated. After 16 microseconds Cycle End latch G is activated and 'Spec POR' line H is developed. 'Spec POR' resets the complete circuit and prevents any more drive pulses from being sent to the carriage drive motor.

Carriage CE Switch Circuit

The carriage also advances when the Carriage CE switch is turned on activating Carr CE Latch 1 J . The output from this latch activates the CE Carr Control latch K . Its output, 'CE Carr Control Latch' signal, takes the place of 'Carriage Go' from the system and activates the Carr Busy latch.

The circuit then functions the same as if 'Carriage Go' were present except for the development of the 'Carriage Advance' pulses L sent to the system. In this case, these pulses are developed by the output from the Carr CE Latch 1 J ANDed with a signal which is 'Carr M Feedback' M ANDed with not 'Stop 3 Latch'.

Turning Carriage CE switch off slows the carriage and stops it as was explained in "Stop Pulse Development".

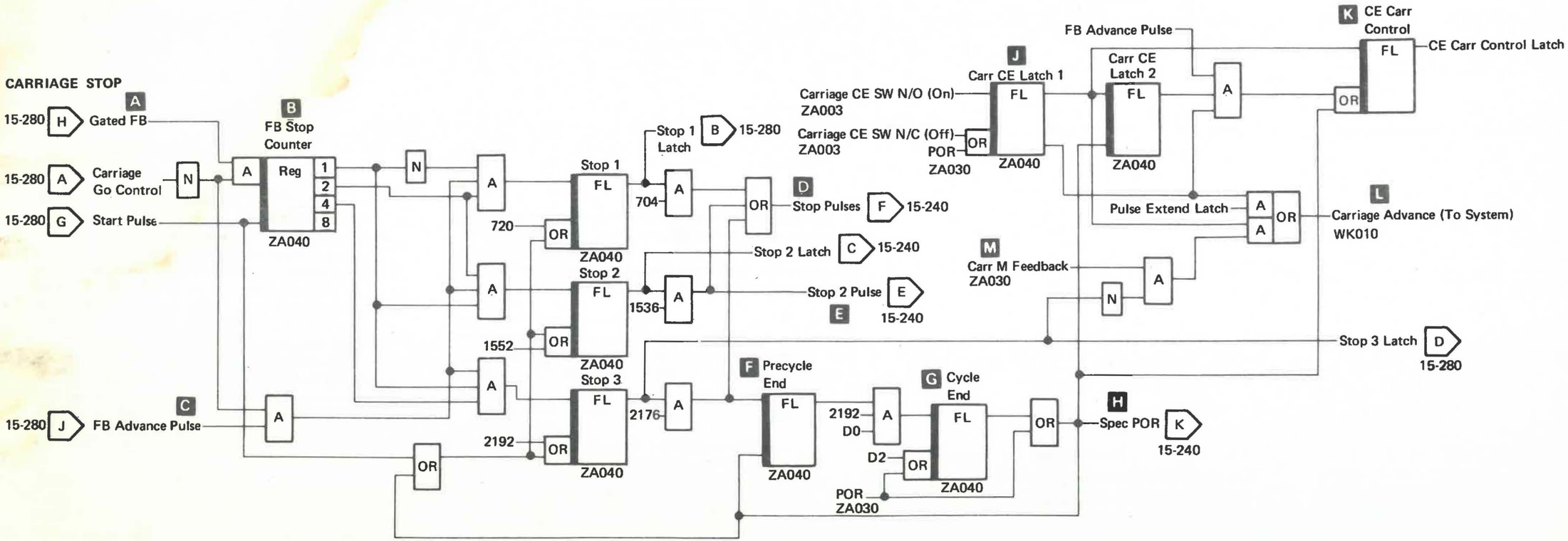

PRINT AND SPACE OPERATION

MODEL-1

This page describes the functions and the timing relationships for printing and carriage movement for the IBM 5211 Model-1 Printer. The example is based on using a 48-character set print belt and 6 lines-per-inch forms spacing.

The print and space cycle takes approximately 375 milliseconds for Model-1 with the printing portion and spacing portion taking approximately 345 and 30 milliseconds, respectively.

System Setup

The following conditions are active before starting to print:

- The belt image is loaded in the UCSB (Universal Character Set Buffer) in the system.
- The forms image is loaded in the FCB (Forms Control Buffer) in the system.
- The system is synchronized with the printer with the "home" pulse that was developed from the home position on the print belt.
- The system has Model-1 status loaded.

When the system has data to print, the user's program issues a print command, which loads a block of data in the PLB. The block includes data to be printed as well as additional commands used by the printer attachment to perform printer-related tasks such as setting the left-most print position and forms spacing/skipping controls.

The system activates the paper clamp to prevent forms movement during printing.

Printing Odd-Numbered Print Positions

The printer and system execute 240-odd print subscans (5 for each character in the character set) to address the hammers. The system activates 240 fire-tier pulses to fire the hammers to print the characters in the odd-numbered print positions.

The print subscans provide the timing relationship between the print belt and the system. Each print scan has 5 print subscans that follow in sequence: 1-2-3-4-5, then repeat. The print subscan pulses are sent from the printer to the system. The system develops fire-tier pulses that also follow in sequence: 1-2-3-4-5, then repeat. Each fire tier is assigned to fire certain hammers. For example, Fire Tier 1 always fires hammers for print positions 1, 11, 21, etc. during the 48-odd print scans.

During subscan 1, the system compares the characters in the PLB that are to be printed in print positions 1, 11, 21, etc. with the characters in the UCSB that represent the characters on the belt that are physically aligned with print positions 1, 11, 21, etc. If these two characters are equal, the system sends the correct data bits to the printer to address the hammer. The printer performs a parity check on the address. The system sends a strobe pulse for each valid hammer address, and sets the correct hammer latch.

After the latches are set, Fire Tier 1 is activated by the system. Fire Tier 1 is timed to fire the hammers that are aligned with print positions 1, 11, 21, etc. Fire Tier 1 ANDs with the hammer latches that are turned on to activate the hammer driver(s), firing the hammers.

During each fire tier time, the system activates hammer sample pulses that perform hammer echo checking. Any hammer that is fired responds to its hammer sample pulse by activating the 'Hammer Echo Return' signal to the system. For example, if 3 hammers are fired, the hammer echo return signal is activated 3 times.

These procedures are repeated for each of the 240-odd subscans:

- Subscan and Fire Tier pulse generation
- Comparing data with print belt to address the hammers
- Firing the hammer(s) and echo checking

Note that portions of the addressing and firing overlap. For example, when Fire Tier 1 is active and firing hammers 1, 11, 21, print subscan 2 is active and addressing hammer latches 3, 13, 23. These latches are fired by the Fire Tier 2 pulse.

After subscan 5 of print scan 48 is completed, the system waits for 15 print subscans before starting the 48-even print scans. This allows time for hammer settling between printing the odd-numbered print positions and printing the even-numbered print positions.

Printing Even-Numbered Print Positions

The printer and system execute 240-even print subscans to address the hammers. The system activates 240 fire tier pulses to fire the hammers to print the characters in the even-numbered print positions.

The subscan and fire tier pulses follow in the same order as the odd print scans. The same functions are executed: comparing data for hammer addressing, firing, and echo checking.

After the 48-even print scans, the print portion of the operation is done.

Forms Movement

When the 48th print scan is completed, the system deactivates the paper clamp to allow forms movement. At this time, the system activates 'Carriage Go' to the printer which develops 8 carriage advance pulses. These pulses are used to drive or "step" the carriage motor and are also returned to the system to update the line count in the FCB and to verify carriage motion. The carriage motor moves the forms 1/6 inch.

The system activates the paper clamp to hold the forms for the next print line.

The sequence of 48-odd and 48-even print scans and forms movement is repeated for each print line.

PRINT AND SPACE TIMING MODEL-1

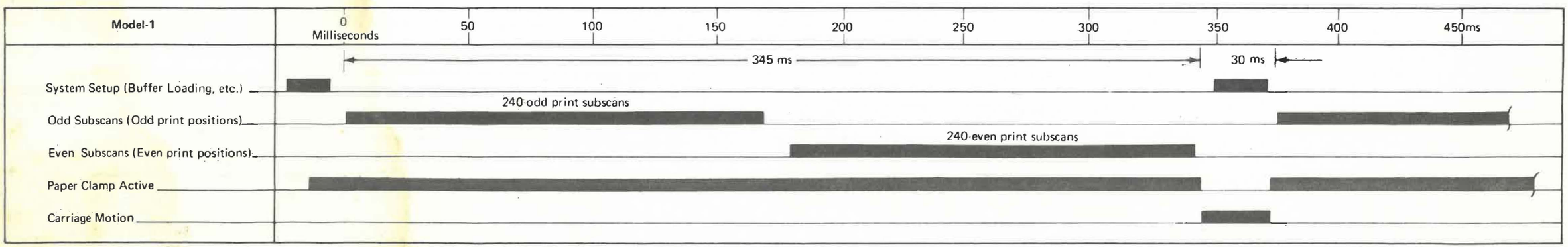

MODEL-2

This page describes the functions and the timing relationships for printing and carriage movement for the IBM 5211 Model-2 Printer. The example is based on using a 48-character set print belt and 6 lines-per-inch forms spacing.

The print and space cycle takes approximately 200 milliseconds for Model-2 with the printing portion and spacing portion taking approximately 170 and 30 milliseconds, respectively.

System Setup

The following conditions are active before starting to print:

- The belt image is loaded in the UCSB (Universal Character Set Buffer) in the system.
- The forms image is loaded in the FCB (Forms Control Buffer) in the system.
- The system is synchronized with the printer with the "home" pulse that was developed from the home position on the print belt.
- The system has Model-2 status loaded.

When the system has data to print, the user's program issues a print command, which loads a block of data in the PLB. The block includes data to be printed as well as additional commands used by the printer attachment to perform printer-related tasks such as setting the left-most print position and forms spacing/skipping controls.

The system activates the paper clamp to prevent forms movement during printing.

Printing

The printer and system execute 240 print subscans (5 for each character in the character set) to address the hammers. The system activates 240 fire-tier pulses to fire the hammers to print the characters.

The print subscans provide the timing relationship between the print belt and the system. Each print scan has 5 print subscans that follow in sequence: 1-2-3-4-5, then repeat. The print subscan pulses are sent from the printer to the system. The system develops fire-tier pulses that also follow in sequence: 1-2-3-4-5, then repeat. Each fire tier is assigned to fire certain hammers. For example, Fire Tier 1 always fires hammers for print positions 1, 6, 11, 16, etc.

During subscan 1, the system compares the characters in the PLB that are to be printed in print positions 1, 6, 11, 16, etc. with the characters in the UCSB that represent the characters on the belt that are physically aligned with print positions 1, 6, 11, 16, etc. If these two characters are equal, the system sends the correct data bits to the printer to address the hammer. The printer performs a parity check on the address. The system sends a strobe pulse for each valid hammer address, and sets the correct hammer latch.

After the latches are set, Fire Tier 1 is activated by the system. Fire Tier 1 is timed to fire the hammers that are aligned with print positions 1, 6, 11, 16, etc. Fire Tier 1 ANDs with the hammer latches that are turned on to activate the hammer driver(s), firing the hammer(s).

During each fire-tier time, the system activates hammer sample pulses that perform hammer echo checking. Any hammer that is fired responds to its hammer sample pulse by activating the 'Hammer Echo Return' signal to the system. For example, if 3 hammers are fired, the hammer echo return signal is activated 3 times.

These procedures are repeated for each of the 240 subscans:

- Subscan and Fire-Tier pulse generation
- Comparing data with print belt to address the hammers
- Firing the hammer(s) and echo checking.

Note that portions of the addressing and firing overlap. For example, when Fire Tier 1 is active and firing hammers 1, 6, 11, 16, etc. print subscan 2 is active and addressing hammer latches 3, 8, 13, 18, etc. These latches are fired by the Fire Tier 2 pulse.

After the 48-even print scans, the print portion of the operation is done.

Forms Movement

When the 48th print scan is completed, the system deactivates the paper clamp to allow forms movement. At this time, the system activates 'Carriage Go' to the printer which develops 8 carriage advance pulses. These pulses are used to drive or "step" the carriage motor and are also returned to the system to update the line count in the FCB and to verify carriage motion. The carriage motor moves the forms 1/6 inch.

The system activates the paper clamp to hold the forms for the next print line.

The sequence of 48-print scans and forms movement is repeated for each print line.

PRINT AND SPACE TIMING MODEL-2

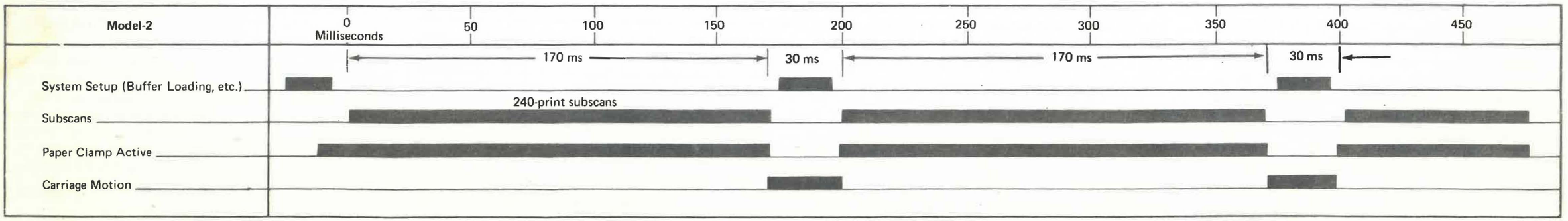

THIS PAGE INTENTIONALLY LEFT BLANK

POWER SUPPLY — LEVEL 2

INTRODUCTION

The 5211 Power Supply develops the 25 Vdc, 8.5 Vdc, and the 5 Vdc for the printer circuits and control logic. The 'Power On' signal from the System activates the 5211 power supply when the Power On/Power Off switch is turned on. When all three dc voltages are correct, a 'Power Complete' signal is sent to the System. If any voltage fails, a 'Power Check' signal is sent to the System. For detail on removal and replacement of the Power Supply, see Section 9, 9-000.

POWER ON SEQUENCE

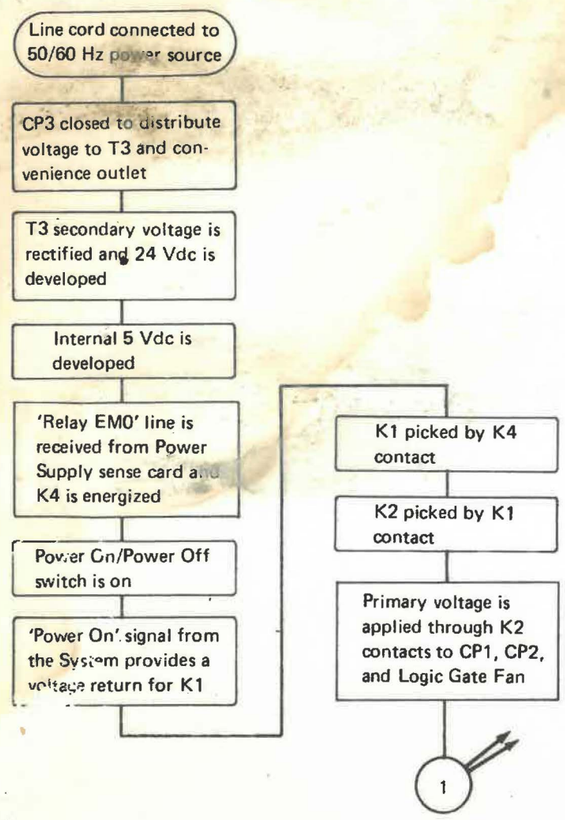

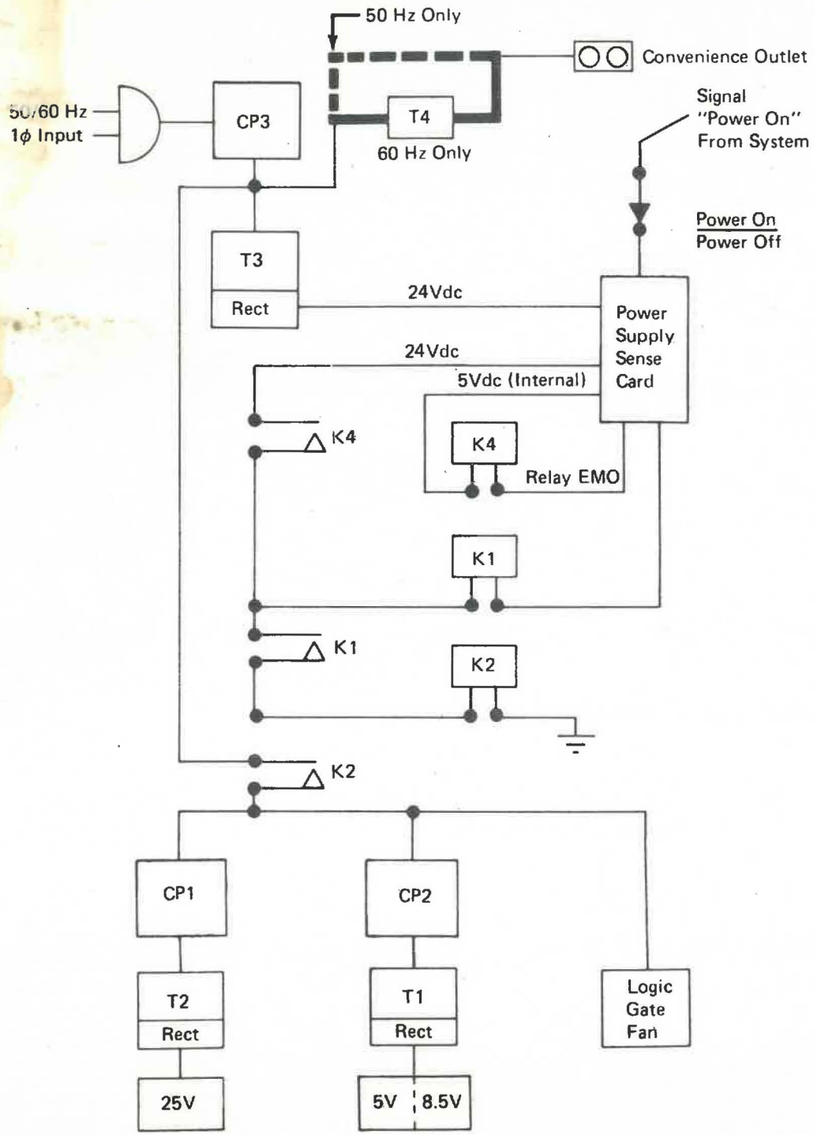

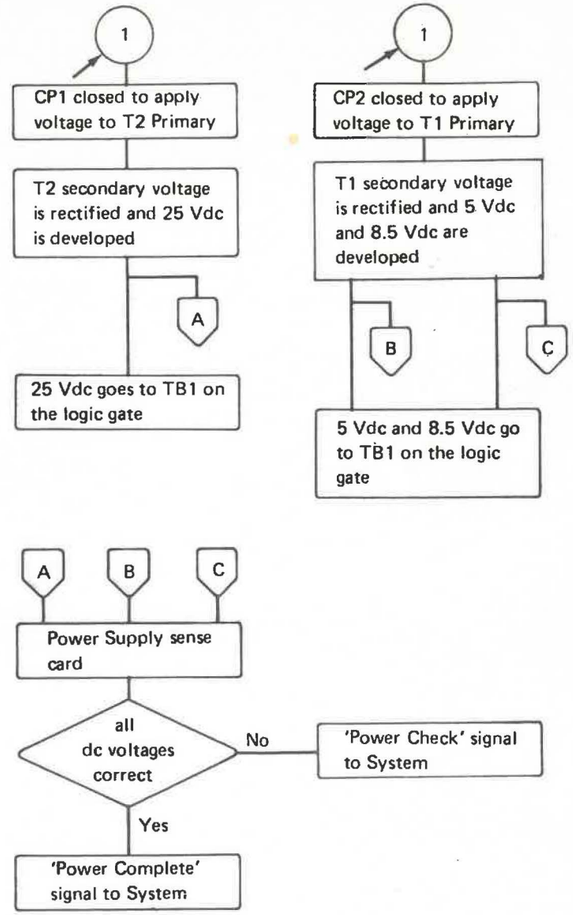

POWER SUPPLY — LEVEL 3

INTRODUCTION

The 5211 Power Supply develops the 5 Vdc, 8.5 Vdc, and the 25 Vdc for the printer circuits and logic control. The Power On signal from the System activates the 5211 power supply when the Power On/Off switch is turned on. When all three dc voltages are correct, a Power Complete signal is sent to the System. If any dc voltage fails, a power Check signal is sent to the System and the power supply is turned off. For detailed instructions on removal and replacement of the Power Supply, see Section 9, 9-000. Refer to Section 18 (YF001) for power supply circuitry.

Note: power supply Power On Reset (POR) is active during power up.

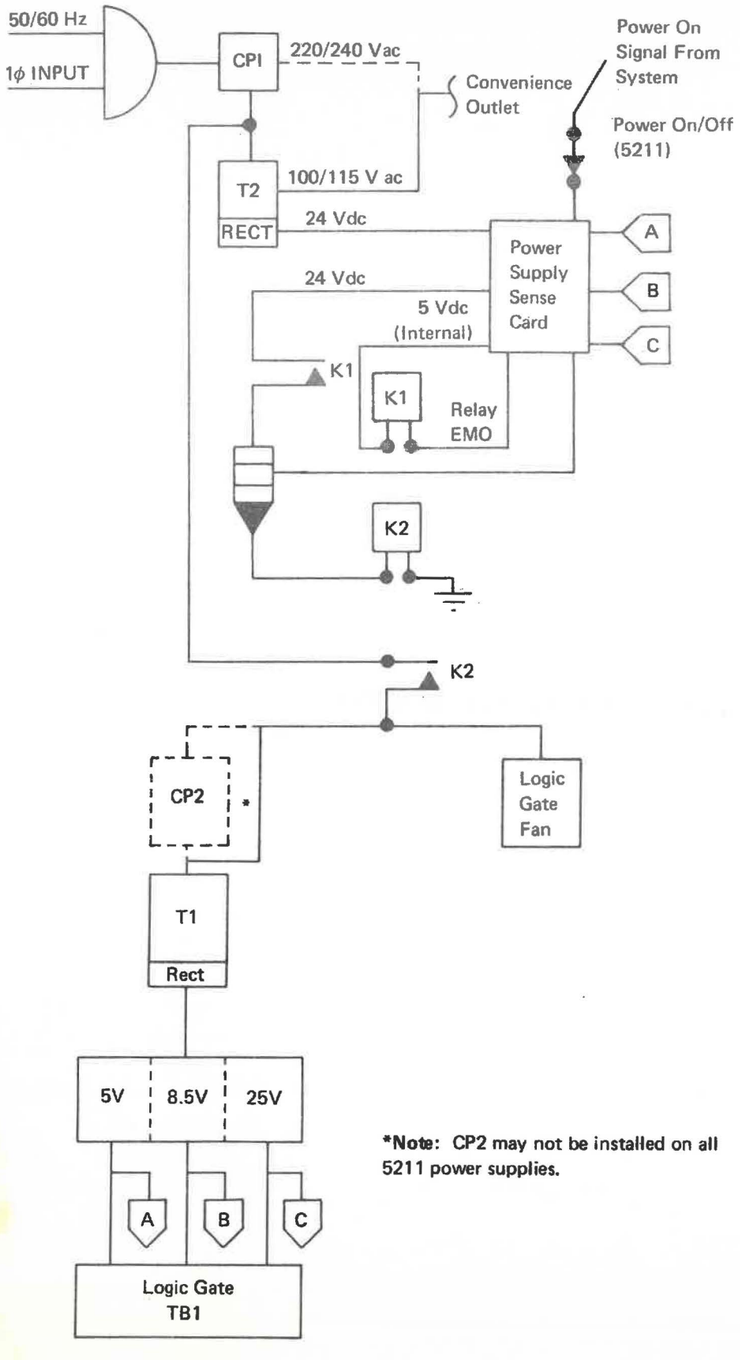

***Note:** CP2 may not be installed on all 5211 power supplies.

POWER ON SEQUENCE

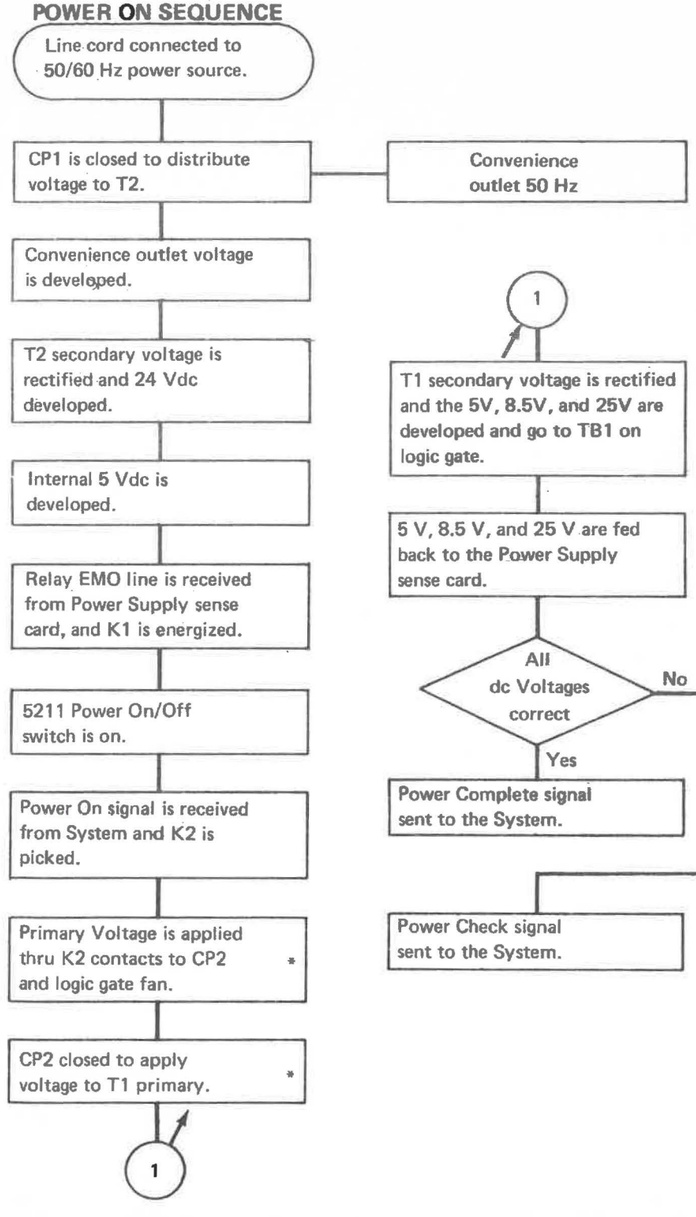

THIS PAGE INTENTIONALLY LEFT BLANK

SECTION 16: DIAGNOSTIC DESCRIPTIONS

INTRODUCTION

The IBM 5211 Printer is tested by seven (7) basic Function and Timing diagnostic tests:

Function Tests

- Matrix Print
- Ripple Print
- Character Print
- Carriage Space/Skip

Timing Tests

- Impression Control Single Shot (IMPSS)
- Belt Motor Feedback LED
- Carriage Motor Feedback LED

All diagnostic programs are invoked and run at the system level. The using system may have more than the basic seven diagnostic tests (Example: System/34 "Blink Console Lights"—5211 Operator Panel Lamp Test). For any additional diagnostic test descriptions and operating procedures, refer to the System Maintenance library.

This section of the Maintenance Information Manual (MIM) contains descriptive information, ONLY. Sample printouts are provided as required. NO OPERATING PROCEDURES are included. For detailed operating procedures see the using system Maintenance Documentation.

FUNCTION TESTS

MATRIX PRINT

This diagnostic program addresses and prints one character per print position, per line, starting in print position 1 and ending in print position 132. A sample printout of this diagnostic test can be found on 16-020. This test is commonly used by the CE to isolate hammer addressing problems. This diagnostic ends automatically after printing 132 lines.

RIPPLE PRINT

A pattern consisting of every character in the System's UCSB (belt image) is printed in all 132 print positions. CE intervention is required to end this diagnostic test. The Ripple Print program is used to check overall 5211 print quality, printer operation, and normal single-space forms movement. See 16-030 for a sample printout of this test.

CHARACTER PRINT

This diagnostic function test allows the CE to select a single character (including blanks) to be printed in any single print position or in all 132 positions. An example of the "Character Print" diagnostic test is found on 16-040. (This example uses the character "H" in all 132 positions.) Manual intervention by the CE is required to end this test. The "Character Print" test can be used to check print quality, or during adjustment of hammer-flight time and the PSS Emitter Assembly.

CARRIAGE SPACE/SKIP

This function test checks the overall forms movement and handling capabilities of the 5211 printer. The CE can select either 6 LPI or 8 LPI operation. The sample printout of this test (see 16-050) was obtained using 8 LPI mode. The diagnostic program starts with a single space command and progresses through 2, 4, 8, 16, and 32 line space commands. This test normally ends after the 32 line space operation, but the CE has the option to loop this routine if so desired.

TIMING TESTS

IMPRESSION CONTROL SINGLE SHOT (IMPSS)

This Timing Test allows the CE to measure the Impression Control Single Shot (IMPSS). If the IMPSS timing is found to be outside recommended timing limits, this test can be used to adjust the IMPSS Potentiometer. Refer to Section 5, 5-000 for necessary detailed maintenance information.

BELT MOTOR FEEDBACK LED

To check the first Belt Motor Feedback LED pulse, run this diagnostic timing test. Because CE Switch 1—BELT GO has to be ON, manual intervention by the CE is required. This test is also used to measure and adjust the Belt Motor LED assembly. For all service check and adjustment procedure information, see Section 4, 4-000.

CARRIAGE MOTOR FEEDBACK LED

The CE uses this timing test to perform the "Carriage Motor Feedback LED" service check and adjustment procedure. CE Switch 2--CARR must be ON, and the forms should be removed from the tractors. All start and stopping of this test is performed either at the 5211 Printer or, the using system. For detailed maintenance procedures see, Section 8, 8-000.

SAMPLE–MATRIX PRINT TEST

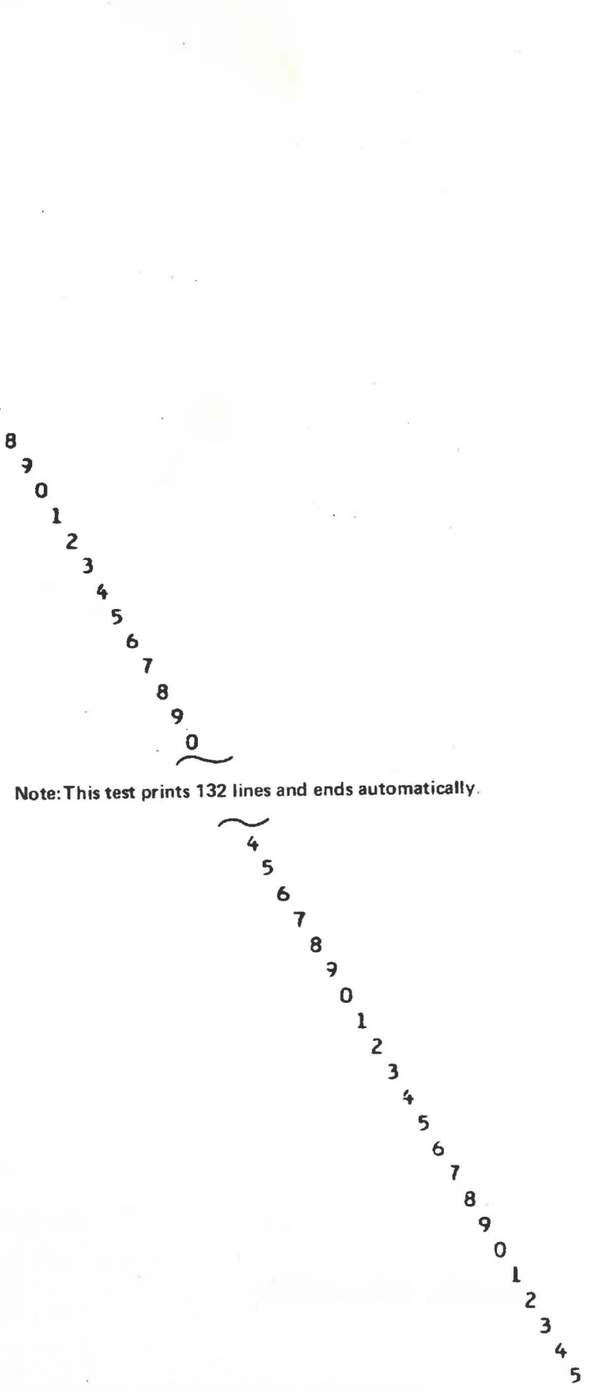

Note: This test prints 132 lines and ends automatically.

SAMPLE—RIPPLE PRINT TEST

```
HI+.'1234567890#a/STUVWXYZ&,%JKLMNOPQR-$*ABCDEFGHI+.'1234567890#a/STUVWXYZ&,%JKLMNOPQR-$*ABCDEFGHI+.'1234567890#a/STUVWXYZ&,%JKLMNOP
I+.'1234567890#a/STUVWXYZ&,%JKLMNOPQR-$*ABCDEFGHI+.'1234567890#a/STUVWXYZ&,%JKLMNOPQ-$*ABCDEFGHI+.'1234567890#a/STUVWXYZ&,%JKLMNOPQ
+.'1234567890#a/STUVWXYZ&,%JKLMNOPQR-$*ABCDEFGHI+.'1234567890#a/STUVWXYZ&,%JKLMNOPQR-$*ABCDEFGHI+.'1234567890#a/STUVWXYZ&,%JKLMNOPQR
.'1234567890#a/STUVWXYZ&,%JKLMNOPQR-$*ABCDEFGHI+.'1234567890#a/STUVWXYZ&,%JKLMNOPQR-$*ABCDEFGHI+.'1234567890#a/STUVWXYZ&,%JKLMNOPQR-
'1234567890#a/STUVWXYZ&,%JKLMNOPQR-$*ABCDEFGHI+.'1234567890#a/STUVWXYZ&,%JKLMNOPQR-$*ABCDEFGHI+.'1234567890#a/STUVWXYZ&,%JKLMNOPQR-$
1234567890#a/STUVWXYZ&,%JKLMNOPQR-$*ABCDEFGHI+.'1234567890#a/STUVWXYZ&,%JKLMNOPQR-$*ABCDEFGHI+.'1234567890#a/STUVWXYZ&,%JKLMNOPQR-$*
2345678 90#a/STUVWXYZ&,%JKLMNOPQR-$*ABCDEFGHI+.'1234567890#a/STUVWXYZ&,%JKLMNOPQR-$*ABCDEFGHI+.'1234567890#a/STUVWXYZ&,%JKLMNOPQR-$*A
3456789 0#a/STUVWXYZ&,%JKLMNOPQR-$*ABCDEFGHI+.'1234567890#a/STUVWXYZ&,%JKLMNOPQR-$*ABCDEFGHI+.'1234567890#a/STUVWXYZ&,%JKLMNOPQR-$*AB
4567890 #a/STUVWXYZ&,%JKLMNOPQR-$*ABCDEFGHI+.'1234567890#a/STUVWXYZ&,%JKLMNOPQR-$*ABCDEFGHI+.'1234567890#a/STUVWXYZ&,%JKLMNOPQR-$*ABC
5678901 #a/STUVWXYZ&,%JKLMNOPQR-$*ABCDEFGHI+.'1234567890#a/STUVWXYZ&,%JKLMNOPQR-$*ABCDEFGHI+.'1234567890#a/STUVWXYZ&,%JKLMNOPQR-$*ABCD
6789012 #a/STUVWXYZ&,%JKLMNOPQR-$*ABCDEFGHI+.'1234567890#a/STUVWXYZ&,%JKLMNOPQR-$*ABCDEFGHI+.'1234567890#a/STUVWXYZ&,%JKLMNOPQR-$*ABCDE
7890123 #a/STUVWXYZ&,%JKLMNOPQR-$*ABCDEFGHI+.'1234567890#a/STUVWXYZ&,%JKLMNOPQR-$*ABCDEFGHI+.'1234567890#a/STUVWXYZ&,%JKLMNOPQR-$*ABCDEF
8901234 #a/STUVWXYZ&,%JKLMNOPQR-$*ABCDEFGHI+.'1234567890#a/STUVWXYZ&,%JKLMNOPQR-$*ABCDEFGHI+.'1234567890#a/STUVWXYZ&,%JKLMNOPQR-$*ABCDEFG
9012345 #a/STUVWXYZ&,%JKLMNOPQR-$*ABCDEFGHI+.'1234567890#a/STUVWXYZ&,%JKLMNOPQR-$*ABCDEFGHI+.'1234567890#a/STUVWXYZ&,%JKLMNOPQR-$*ABCDEFGH
0123456 #a/STUVWXYZ&,%JKLMNOPQR-$*ABCDEFGHI+.'1234567890#a/STUVWXYZ&,%JKLMNOPQR-$*ABCDEFGHI+.'1234567890#a/STUVWXYZ&,%JKLMNOPQR-$*ABCDEFGHI
#a/STUVWXYZ&,%JKLMNOPQR-$*ABCDEFGHI+.'1234567890#a/STUVWXYZ&,%JKLMNOPQR-$*ABCDEFGHI+.'1234567890#a/STUVWXYZ&,%JKLMNOPQR-$*ABCDEFGHI+
a/STUVWXYZ&,%JKLMNOPQR-$*ABCDEFGHI+.'1234567890#a/STUVWXYZ&,%JKLMNOPQR-$*ABCDEFGHI+.'1234567890#a/STUVWXYZ&,%JKLMNOPQR-$*ABCDEFGHI+.
/STUVWXYZ&,%JKLMNOPQR-$*ABCDEFGHI+.'1234567890#a/STUVWXYZ&,%JKLMNOPQR-$*ABCDEFGHI+.'1234567890#a/STUVWXYZ&,%JKLMNOPQR-$*ABCDEFGHI+.'
STUVWXYZ&,%JKLMNOPQR-$*ABCDEFGHI+.'1234567890#a/STUVWXYZ&,%JKLMNOPQR-$*ABCDEFGHI+.'1234567890#a/STUVWXYZ&,%JKLMNOPQR-$*ABCDEFGHI+.'1
TUVWXYZ&,%JKLMNOPQR-$*ABCDEFGHI+.'1234567890#a/STUVWXYZ&,%JKLMNOPQR-$*ABCDEFGHI+.'1234567890#a/STUVWXYZ&,%JKLMNOPQR-$*ABCDEFGHI+.'12
UVWXYZ&,%JKLMNOPQR-$*ABCDEFGHI+.'1234567890#a/STUVWXYZ&,%JKLMNOPQR-$*ABCDEFGHI+.'1234567890#a/STUVWXYZ&,%JKLMNOPQR-$*ABCDEFGHI+.'123
VWXYZ&,%JKLMNOPQR-$*ABCDEFGHI+.'1234567890#a/STUVWXYZ&,%JKLMNOPQR-$*ABCDEFGHI+.'1234567890#a/STUVWXYZ&,%JKLMNOPQR-$*ABCDEFGHI+.'1234
WXYZ&,%JKLMNOPQR-$*ABCDEFGHI+.'1234567890#a/STUVWXYZ&,%JKLMNOPQR-$*ABCDEFGHI+.'1234567890#a/STUVWXYZ&,%JKLMNOPQR-$*ABCDEFGHI+.'12345
XYZ&,%JKLMNOPQR-$*ABCDEFGHI+.'1234567890#a/STUVWXYZ&,%JKLMNOPQR-$*ABCDEFGHI+.'1234567890#a/STUVWXYZ&,%JKLMNOPQR-$*ABCDEFGHI+.'123456
YZ&,%JKLMNOPQR-$*ABCDEFGHI+.'1234567890#a/STUVWXYZ&,%JKLMNOPQR-$*ABCDEFGHI+.'1234567890#a/STUVWXYZ&,%JKLMNOPQR-$*ABCDEFGHI+.'1234567
Z&,%JKLMNOPQR-$*ABCDEFGHI+.'1234567890#a/STUVWXYZ&,%JKLMNOPQR-$*ABCDEFGHI+.'1234567890#a/STUVWXYZ&,%JKLMNOPQR-$*ABCDEFGHI+.'12345678
&,%JKLMNOPQR-$*ABCDEFGHI+.'1234567890#a/STUVWXYZ&,%JKLMNOPQR-$*ABCDEFGHI+.'1234567890#a/STUVWXYZ&,%JKLMNOPQR-$*ABCDEFGHI+.'123456789
,%JKLMNOPQR-$*ABCDEFGHI+.'1234567890#a/STUVWXYZ&,%JKLMNOPQR-$*ABCDEFGHI+.'1234567890#a/STUVWXYZ&,%JKLMNOPQR-$*ABCDEFGHI+.'1234567890
%JKLMNOPQR-$*ABCDEFGHI+.'1234567890#a/STUVWXYZ&,%JKLMNOPQR-$*ABCDEFGHI+.'1234567890#a/STUVWXYZ&,%JKLMNOPQR-$*ABCDEFGHI+.'1234567890#
JKLMNOPQR-$*ABCDEFGHI+.'1234567890#a/STUVWXYZ&,%JKLMNOPQR-$*ABCDEFGHI+.'1234567890#a/STUVWXYZ&,%JKLMNOPQR-$*ABCDEFGHI+.'1234567890#a
KLMNOPQR-$*ABCDEFGHI+.'1234567890#a/STUVWXYZ&,%JKLMNOPQR-$*ABCDEFGHI+.'1234567890#a/STUVWXYZ&,%JKLMNOPQR-$*ABCDEFGHI+.'1234567890#a/S
LMNOPQR-$*ABCDEFGHI+.'1234567890#a/STUVWXYZ&,%JKLMNOPQR-$*ABCDEFGHI+.'1234567890#a/STUVWXYZ&,%JKLMNOPQR-$*ABCDEFGHI+.'1234567890#a/ST
MNOPQR-$*ABCDEFGHI+.'1234567890#a/STUVWXYZ&,%JKLMNOPQR-$*ABCDEFGHI+.'1234567890#a/STUVWXYZ&,%JKLMNOPQR-$*ABCDEFGHI+.'1234567890#a/STU
NOPQR-$*ABCDEFGHI+.'1234567890#a/STUVWXYZ&,%JKLMNOPQR-$*ABCDEFGHI+.'1234567890#a/STUVWXYZ&,%JKLMNOPQR-$*ABCDEFGHI+.'1234567890#a/STUV
OPQR-$*ABCDEFGHI+.'1234567890#a/STUVWXYZ&,%JKLMNOPQR-$*ABCDEFGHI+.'1234567890#a/STUVWXYZ&,%JKLMNOPQR-$*ABCDEFGHI+.'1234567890#a/STUVW
PQR-$*ABCDEFGHI+.'1234567890#a/STUVWXYZ&,%JKLMNOPQR-$*ABCDEFGHI+.'1234567890#a/STUVWXYZ&,%JKLMNOPQR-$*ABCDEFGHI+.'1234567890#a/STUVWX
QR-$*ABCDEFGHI+.'1234567890#a/STUVWXYZ&,%JKLMNOPQR-$*ABCDEFGHI+.'1234567890#a/STUVWXYZ&,%JKLMNOPQR-$*ABCDEFGHI+.'1234567890#a/STUVWXY
R-$*ABCDEFGHI+.'1234567890#a/STUVWXYZ&,%JKLMNOPQR-$*ABCDEFGHI+.'1234567890#a/STUVWXYZ&,%JKLMNOPQR-$*ABCDEFGHI+.'1234567890#a/STUVWXYZ
-$*ABCDEFGHI+.'1234567890#a/STUVWXYZ&,%JKLMNOPQR-$*ABCDEFGHI+.'1234567890#a/STUVWXYZ&,%JKLMNOPQR-$*ABCDEFGHI+.'1234567890#a/STUVWXYZ&
$*ABCDEFGHI+.'1234567890#a/STUVWXYZ&,%JKLMNOPQR-$*ABCDEFGHI+.'1234567890#a/STUVWXYZ&,%JKLMNOPQR-$*ABCDEFGHI+.'1234567890#a/STUVWXYZ&,%
*ABCDEFGHI+.'1234567890#a/STUVWXYZ&,%JKLMNOPQR-$*ABCDEFGHI+.'1234567890#a/STUVWXYZ&,%JKLMNOPQR-$*ABCDEFGHI+.'1234567890#a/STUVWXYZ&,%
ABCDEFGHI+.'1234567890#a/STUVWXYZ&,%JKLMNOPQR-$*ABCDEFGHI+.'1234567890#a/STUVWXYZ&,%JKLMNOPQR-$*ABCDEFGHI+.'1234567890#a/STUVWXYZ&,%
BCDEFGHI+.'1234567890#a/STUVWXYZ&,%JKLMNOPQR-$*ABCDEFGHI+.'1234567890#a/STUVWXYZ&,%JKLMNOPQR-$*ABCDEFGHI+.'1234567890#a/STUVWXYZ&,%J
CDEFGHI+.'1234567890#a/STUVWXYZ&,%JKLMNOPQR-$*ABCDEFGHI+.'1234567890#a/STUVWXYZ&,%JKLMNOPQR-$*ABCDEFGHI+.'1234567890#a/STUVWXYZ&,%JK
DEFGHI+.'1234567890#a/STUVWXYZ&,%JKLMNOPQR-$*ABCDEFGHI+.'1234567890#a/STUVWXYZ&,%JKLMNOPQR-$*ABCDEFGHI+.'1234567890#a/STUVWXYZ&,%JKL
EFGHI+.'1234567890#a/STUVWXYZ&,%JKLMNOPQR-$*ABCDEFGHI+.'1234567890#a/STUVWXYZ&,%JKLMNOPQR-$*ABCDEFGHI+.'1234567890#a/STUVWXYZ&,%JKLM
FGHI+.'1234567890#a/STUVWXYZ&,%JKLMNOPQR-$*ABCDEFGHI+.'1234567890#a/STUVWXYZ&,%JKLMNOPQR-$*ABCDEFGHI+.'1234567890#a/STUVWXYZ&,%JKLMN
GHI+.'1234567890#a/STUVWXYZ&,%JKLMNOPQR-$*ABCDEFGHI+.'1234567890#a/STUVWXYZ&,%JKLMNOPQR-$*ABCDEFGHI+.'1234567890#a/STUVWXYZ&,%JKLMNO
HI+.'1234567890#a/STUVWXYZ&,%JKLMNOPQR-$*ABCDEFGHI+.'1234567890#a/STUVWXYZ&,%JKLMNOPQR-$*ABCDEFGHI+.'1234567890#a/STUVWXYZ&,%JKLMNOP
I+.'1234567890#a/STUVWXYZ&,%JKLMNOPQR-$*ABCDEFGHI+.'1234567890#a/STUVWXYZ&,%JKLMNOPQ-$*ABCDEFGHI+.'1234567890#a/STUVWXYZ&,%JKLMNOPQ
+.'1234567890#a/STUVWXYZ&,%JKLMNOPQR-$*ABCDEFGHI+.'1234567890#a/STUVWXYZ&,%JKLMNOPQR-$*ABCDEFGHI+.'1234567890#a/STUVWXYZ&,%JKLMNOPQR
.'1234567890#a/STUVWXYZ&,%JKLMNOPQR-$*ABCDEFGHI+.'1234567890#a/STUVWXYZ&,%JKLMNOPQR-$*ABCDEFGHI+.'1234567890#a/STUVWXYZ&,%JKLMNOPQR-
'1234567890#a/STUVWXYZ&,%JKLMNOPQR-$*ABCDEFGHI+.'1234567890#a/STUVWXYZ&,%JKLMNOPQR-$*ABCDEFGHI+.'1234567890#a/STUVWXYZ&,%JKLMNOPQR-$
```

EC 784017 01Mar78 EC 784068 31July78	PN 8324213 1 of 2	16-030

SAMPLE–CHARACTER PRINT TEST

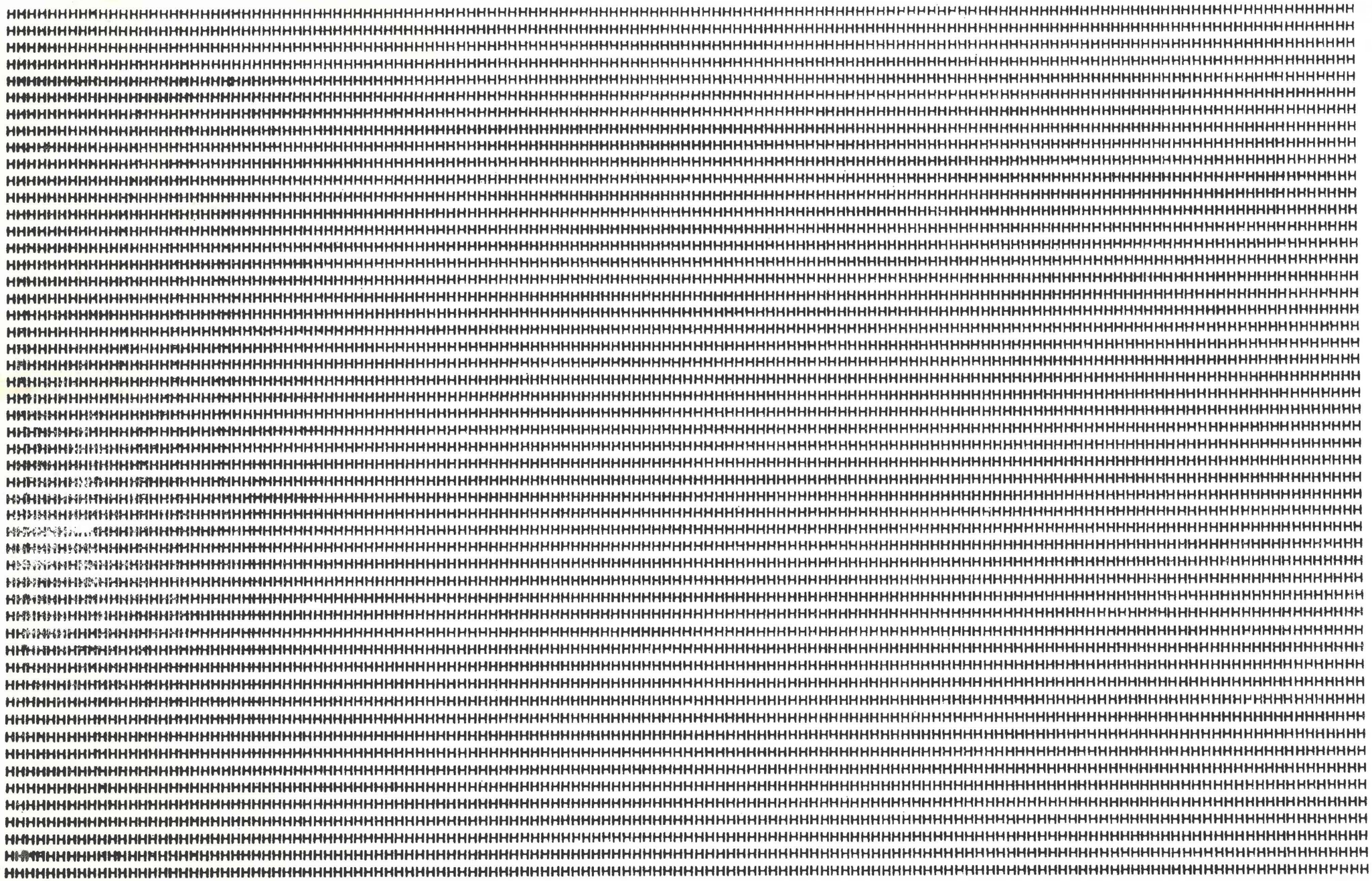

SAMPLE—CARRIAGE SPACE/SKIP TEST
(8 Lines Per Inch)

```
CARRIAGE SPACE/SKIP TEST AT 8 LINES PER INCH

---- CARRIAGE WILL SPACE/SKIP    1 LINES /  0.13 INCHES ----
---- CARRIAGE WILL SPACE/SKIP    2 LINES /  0.25 INCHES ----
---- CARRIAGE WILL SPACE/SKIP    4 LINES /  0.50 INCHES ----

---- CARRIAGE WILL SPACE/SKIP    8 LINES /  1.00 INCHES ----



---- CARRIAGE WILL SPACE/SKIP   16 LINES /  2.00 INCHES ----

---- CARRIAGE WILL SPACE/SKIP   32 LINES /  4.00 INCHES ----



---------------------- LAST LINE ----------------------
```

THIS PAGE INTENTIONALLY LEFT BLANK

SECTION 17: INSTALLATION INSTRUCTIONS

The following procedure should be used when installing the IBM 5211 Printer. Only one person is required and no special tools are necessary.

- Be sure to report any problems encountered using the appropriate major, minor, and cause codes on the Installation Activity Document (IAD)-US, or the Technical Action Report (TAR)-World Trade.
- Check each step as it is performed.

PRE-INSTALLATION

1. Follow the unpacking instructions taped to the top of the printer. ☐
2. Move the printer to its installation site. (If the system is installed on a raised floor, a floor cutout for the cables should be located under each end section of the printer.) ☐
3. Open the covers and inspect for physical damage resulting from shipment. ☐
4. Verify the serial number stamped on the frame of the printer **A** and on the serial number plate **B** with the number on the machine history. ☐
5. Verify that the following items were shipped with the printer, and that the contents are complete:
   a. Shipping Group, B/M 1815101. ☐
   b. Print Belt(s). ☐

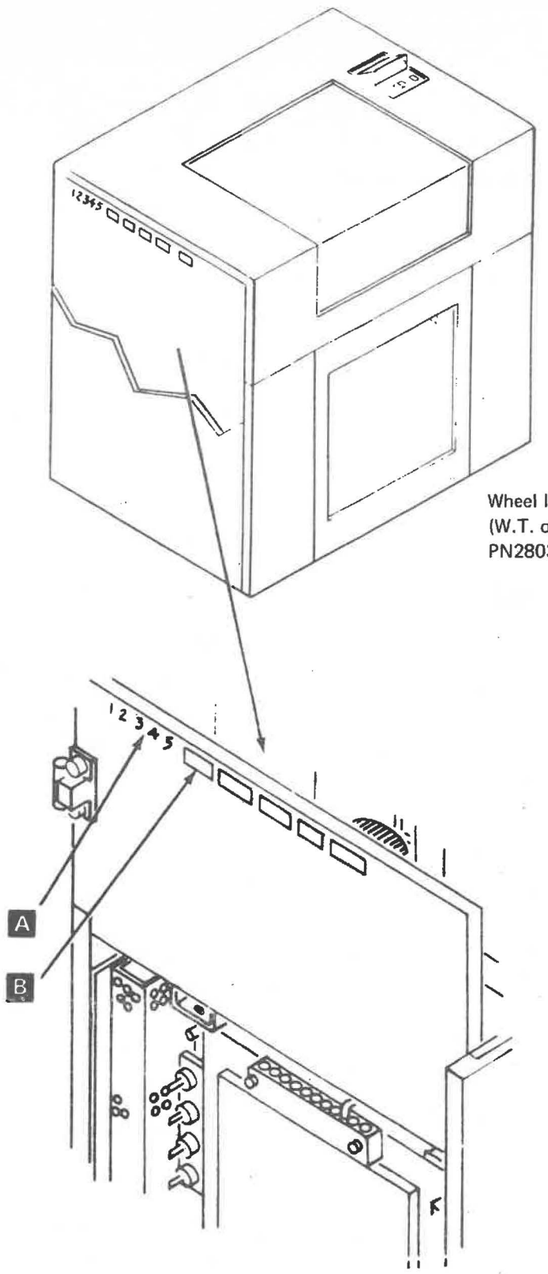

Wheel locks (4)
(W.T. only)
PN280336

INSTALLATION

1. Open the top cover and the front door and remove the print belt cover. ☐
2. Ensure that the shipping screw and washer were removed from the hexagonal stud A during unpacking. ☐
   Note: Ensure that the hexagonal stud A is tight so that a proper ground is maintained.
3. Install the print belt B as described in Section 4, "Print Belt," 4-000. ☐
4. Install the ribbon as shown on decal C located on the left end of the print belt cover. ☐
5. Install the acoustic skirt D by working from the front of the printer. Install all screws and washers but do not tighten. Force the skirt down until a good seal is made at the floor, then tighten the screws. Tighten the rear center screw E last. ☐
6. Install the acoustic skirt F to the bottom of the front door so the seal just touches the floor with the door closed. ☐

   Note: Additional adjustment, if needed, may be obtained by changing the height of the rub strip G .

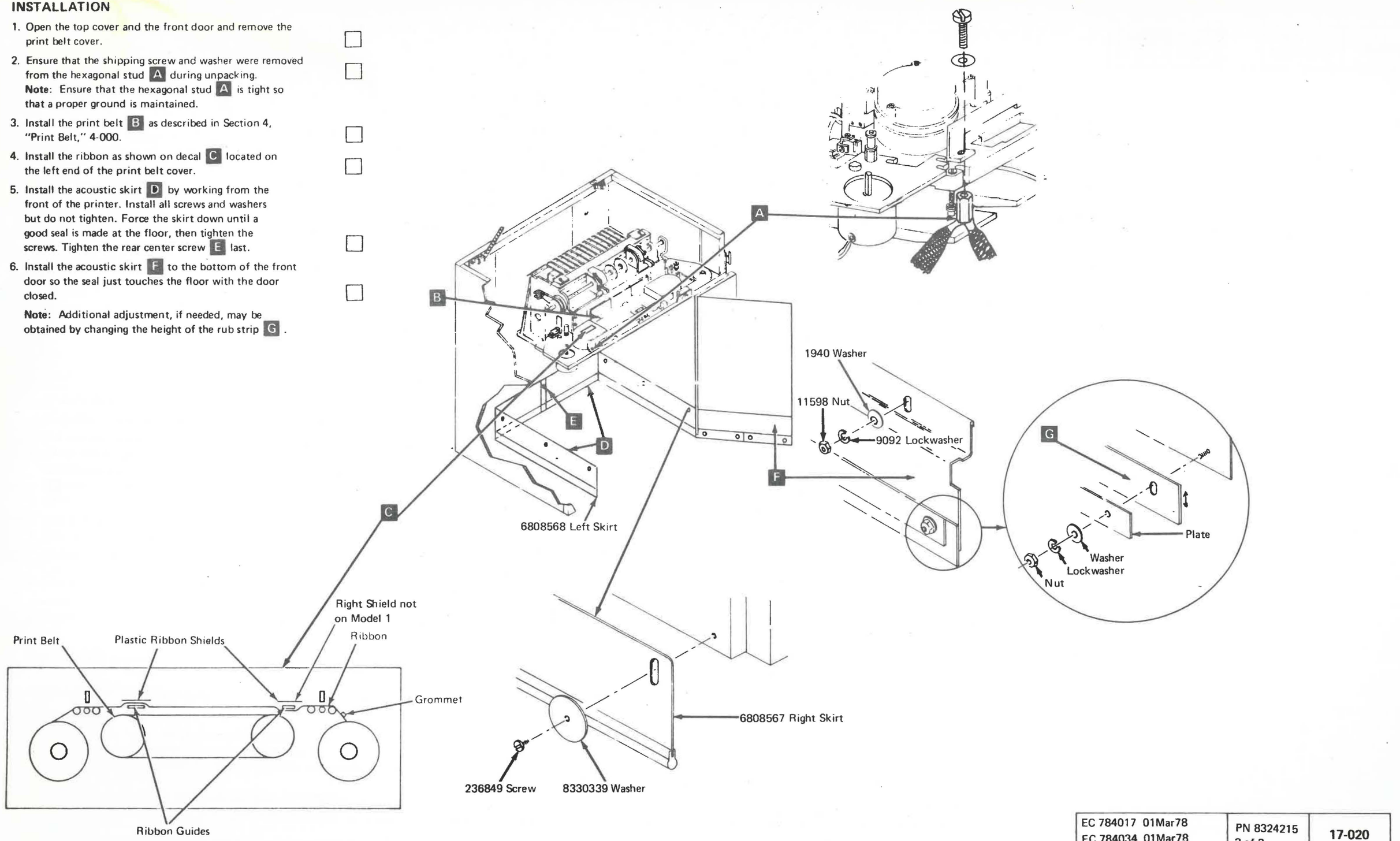

7. Verify that the voltage wiring on the 5211 power supply matches the customer's power. See "Voltage Selection", Section 9, 9-000. Change the transformer wiring on the transformer taps, and change the voltage level H if needed. ☐

8. The ac line cord is located inside the right end of the printer. Push the plug end behind the line filter J if installed, under the power supply, and through the hole K in the bottom of the printer. ☐
   Note: Leave the 2 'P/S test' plugs L disconnected. They are used only when diagnosing failures in the power supply.

9. Open the left end cover and the logic gate. Unwind the signal cable M . Ensure that the cable connectors and logic cards are securely seated in the gate. Verify that the pins on the system end of the signal cable are not damaged. ☐

10. Push the system end of the cable through the hole N in the bottom of the printer and then to the system. ☐

11. Verify the following: ☐
    a. Circuit protector(s) (CP) are ON. P ☐
    b. Power On/Power Off switch is OFF (down). R ☐
    c. CE switches are OFF. S ☐

12. Install forms in the printer by referring to the *IBM 5211 Printer Models 1 and 2 Component Description and Operator's Guide* order no. GA24-3658. ☐

13. See the System Installation Instructions for connecting the signal cable to the system and running printer diagnostics. ☐

CAUTION: Do not connect the power plug to the customer's power source or turn on the Pwer On/Power Off (Instant Power Off) switch R until the signal cable M is connected to the system.

AFTER INSTALLATION

1. Ensure that the *customer* has the IBM 5211 Printer Component Description and Operator's Guide order number GA24-3658. ☐

2. Assist the customer with checkout of the printer. ☐

3. Complete all installation records and report installation complete to the Branch Office dispatcher. ☐

4. Dispose of shipping and packing materials locally. ☐

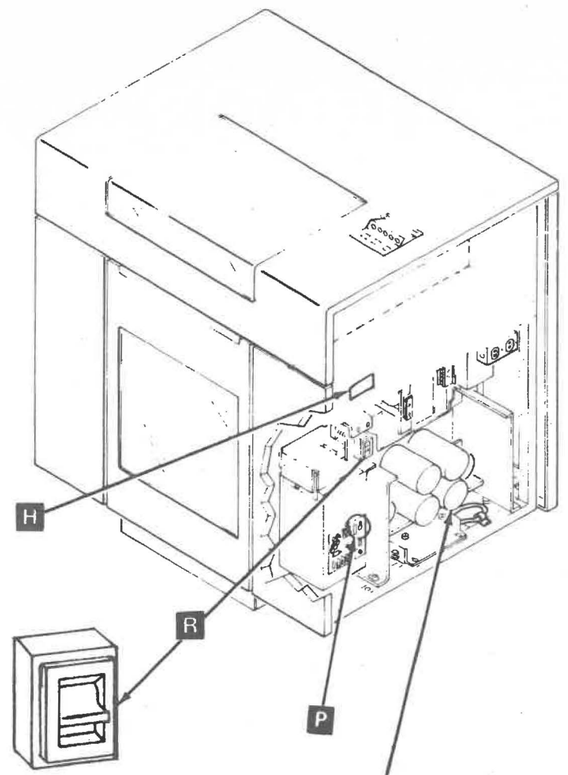

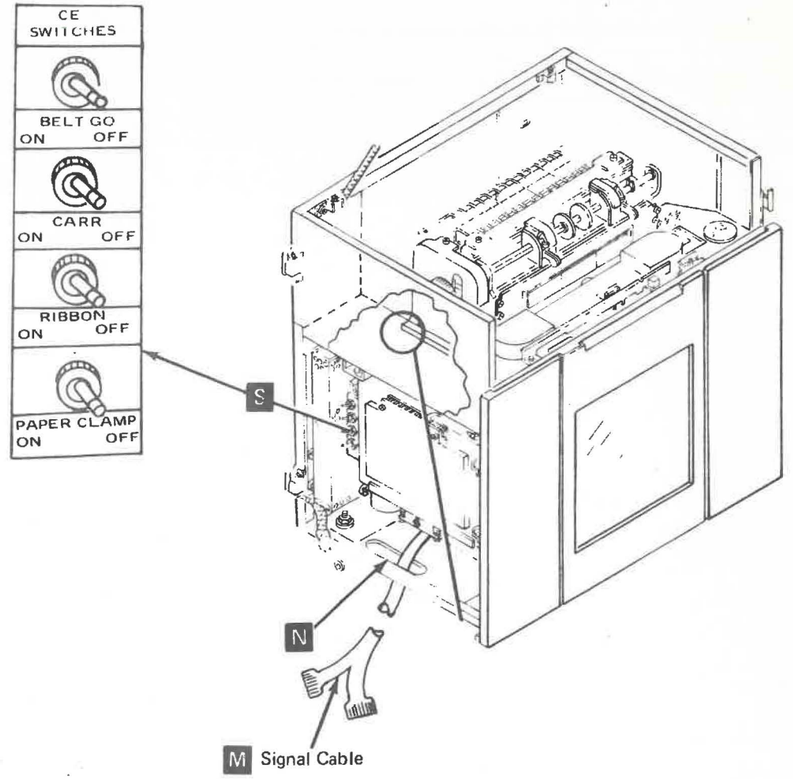

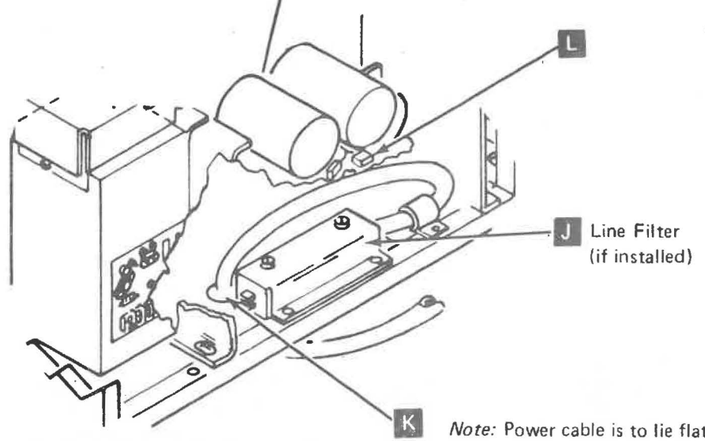

Note: Power cable is to lie flat on base behind line filter.

THIS PAGE INTENTIONALLY LEFT BLANK

SECTION 18: PRINTER WIRING DIAGRAMS — MODEL 1

SECTION CONTENTS

•This section contains the following point-to-point 5211 Printer Wiring Diagrams:

PAGE	PART NUMBER	TITLE
WK010	4703182	INTF PAGE
WK020	4703183	INTF PAGE
YF001 OR YF001 OR	4703209	60 Hz Power/Level 2 Power Supply
	4703210	50 Hz Power/Level 2 Power Supply
YF001 OR YF001	8330327	50/60 Hz Power/Level 3 Power Supply
	8330326	50 Hz Power / Level 3 Power Supply
	5593471	Power Supply/Level 3 Power Supply
	5593490	Power Supply Control Board
ZA002	4703184	Operator Panel Lights and Switches
ZA003	4703185	CE Switches
ZA010	4703186	Hammer Latch and Hammer Driver (1 to 66)
ZA030	4703189	Amplifier Card (A1D4)
ZA035	4703190	Belt Control Card (A1N2)
ZA040	4703191	Ribbon and Carriage Control Card (A1P2)
ZA065	4703192	Motor Driver Card (A1Q2)
ZA070	4703193	Carriage Motor-Right Ribbon Motor
ZA071	4703194	Belt Motor-Left Ribbon Motor
ZA080	4703195	Switches-Throat and End-of-Forms
ZA081	4703196	Lower Paper Clamp and Paper Hole Sense
ZA082	4703197	Belt and Carriage Emitter
ZA100	4703198	Hammer Coil Chart - Positions 1 to 66
ZA120	4703201	Echo Check - Hammers 1 to 66
ZZ010	4703229	Component FRU Listing
ZZ011	4703230	Component FRU Listing
ZZ012	6808502	Component FRU Listing (Level 2 Power Only)
ZZ020	4703205	Logic Gate - TB1
ZZ021	4703206	Gate Voltage Distribution
ZZ025	4703207	Card Location Chart

Note: Logic Board Wiring-ZA010
5211-Model 1 — H2B12 to H2D08 (Gnd.)

THIS PAGE INTENTIONALLY LEFT BLANK

4703182 C

PART NO 4703182 | WK010

INTERFACE PAGE

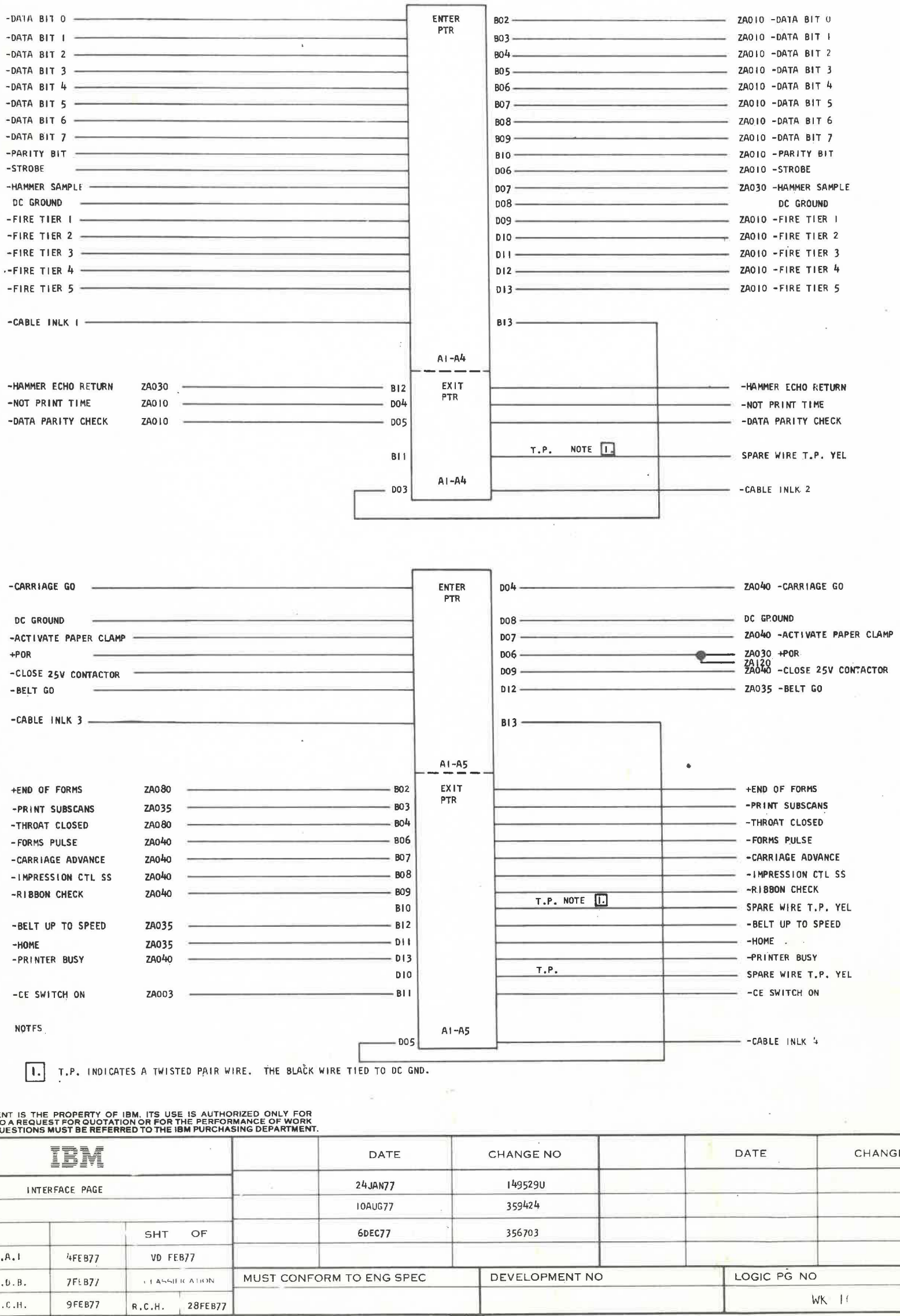

NOTES

1. T.P. INDICATES A TWISTED PAIR WIRE. THE BLACK WIRE TIED TO DC GND.

"THIS DOCUMENT IS THE PROPERTY OF IBM. ITS USE IS AUTHORIZED ONLY FOR RESPONDING TO A REQUEST FOR QUOTATION OR FOR THE PERFORMANCE OF WORK FOR IBM. ALL QUESTIONS MUST BE REFERRED TO THE IBM PURCHASING DEPARTMENT.

IBM

NAME	INTERFACE PAGE		
DESIGN			SHT OF
DETAIL	L.A.I	4FEB77	VD FEB77
CHECK	G.D.B.	7FEB77	CLASSIFICATION
APPRO	R.C.H.	9FEB77	R.C.H. 28FEB77

	DATE	CHANGE NO		DATE	CHANGE NO
	24JAN77	149529U			
	10AUG77	359424			
	6DEC77	356703			

MUST CONFORM TO ENG SPEC	DEVELOPMENT NO	LOGIC PG NO
		WK 11

4703182 C

MIN. NO. 7403522204 VERTICAL ELECTRICAL FORMAT ASTROCLOTH N8907

4703183 C

PART NO 4703183 | LOGIC PG NO WK020

INTERFACE PAGE

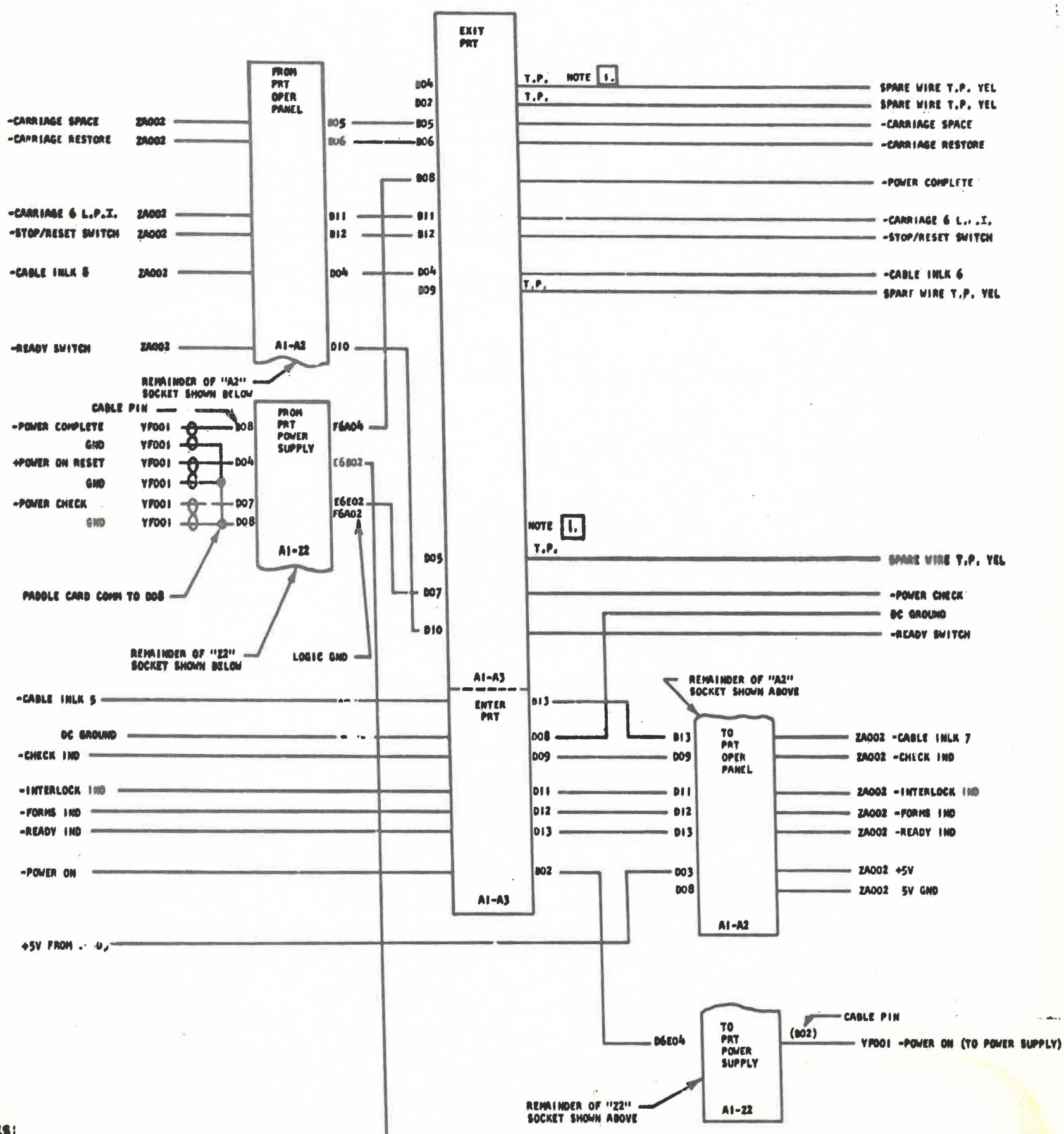

NOTES:

1. T.P. INDICATES A TWISTED PAIR WIRE. THE BLACK WIRE TIED TO DC GND.

"THIS DOCUMENT IS THE PROPERTY OF IBM. ITS USE IS AUTHORIZED ONLY FOR RESPONDING TO A REQUEST FOR QUOTATION OR FOR THE PERFORMANCE OF WORK FOR IBM. ALL QUESTIONS MUST BE REFERRED TO THE IBM PURCHASING DEPARTMENT.

IBM						DATE	CHANGE NO		DATE	CHANGE NO
NAME	INTERFACE PAGE					24JAN77	1/9529U			
						10AUG77	3/9424			
DESIGN			SHT OF			6DEC77	356703			
DETAIL	L.A.I.	4JAN77	VD FEB77			18APR78	784041			
CHECK	G.D.B.	7FEB77	CLASSIFICATION		MUST CONFORM TO ENG SPEC		DEVELOPMENT NO		LOGIC PG NO	
APPRO	R.C.H.	9FEB77	R.C.H.	28FEB77					WK020	

4703183 C

680 0134 1 MROF 7600885804 VERTICAL ELECTRICAL FORMAT ASTROLOGYN 40007

8330327 C

PART NO 8330327 | LOGIC PG NO YF001

50/60HZ PRIMARY INPUT AND CONVENIENCE OUTLET WITH STEP DOWN TRANSFORMER

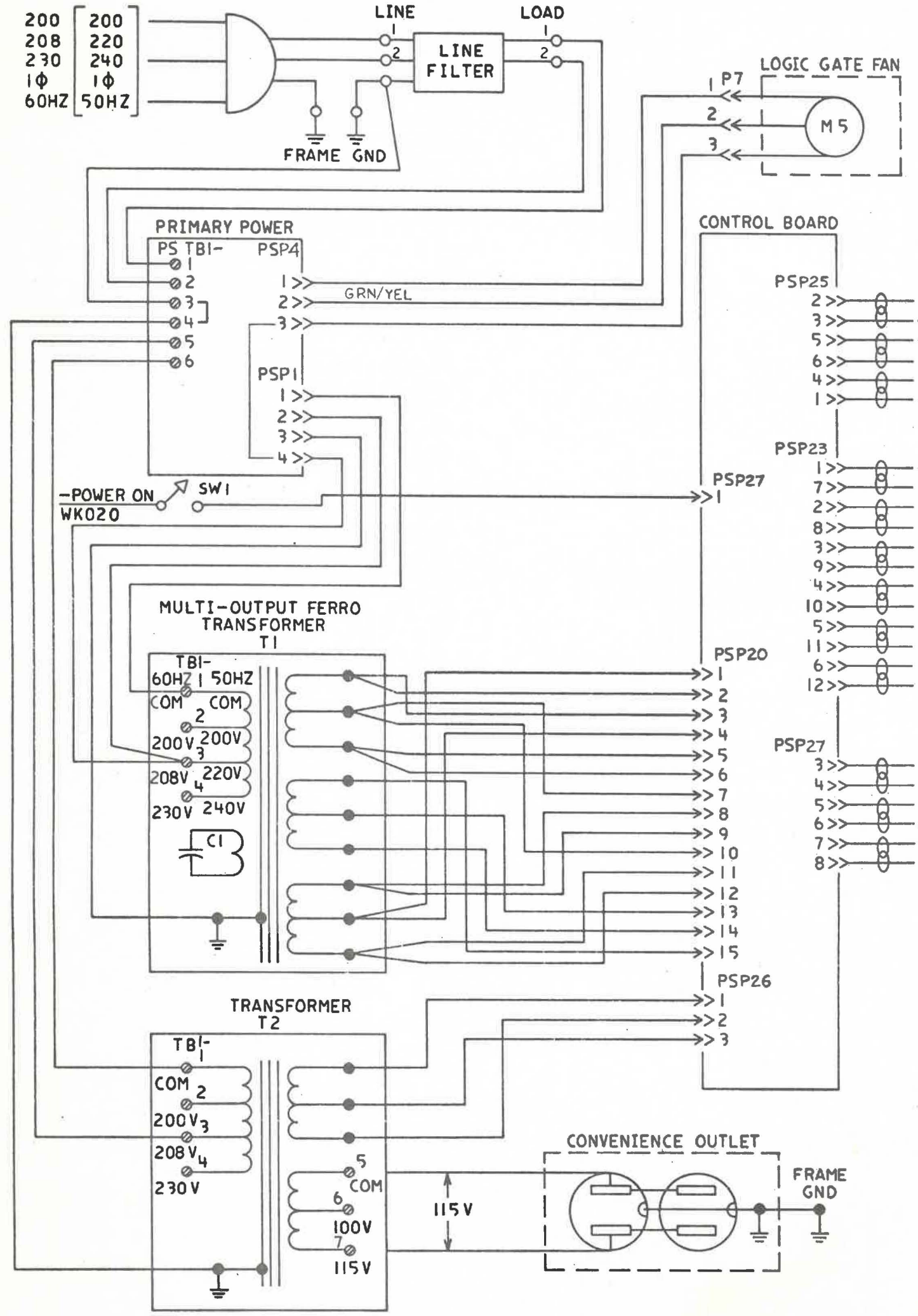

"THIS DOCUMENT IS THE PROPERTY OF IBM. ITS USE IS AUTHORIZED ONLY FOR RESPONDING TO A REQUEST FOR QUOTATION OR FOR THE PERFORMANCE OF WORK FOR IBM. ALL QUESTIONS MUST BE REFERRED TO THE IBM PURCHASING DEPARTMENT.

IBM					DATE	CHANGE NO		DATE	CHANGE NO
NAME					17 JAN 78	155969A			
DESIGN	G B	IDEC77	SHT OF						
DETAIL	G B	IDEC77	VD NOV77						
CHECK	LAI	IDEC77	CLASSIFICATION	MUST CONFORM TO ENG SPEC		DEVELOPMENT NO		LOGIC PG NO	
APPRO	JD7	IDEC77						YF001	

8330327 C

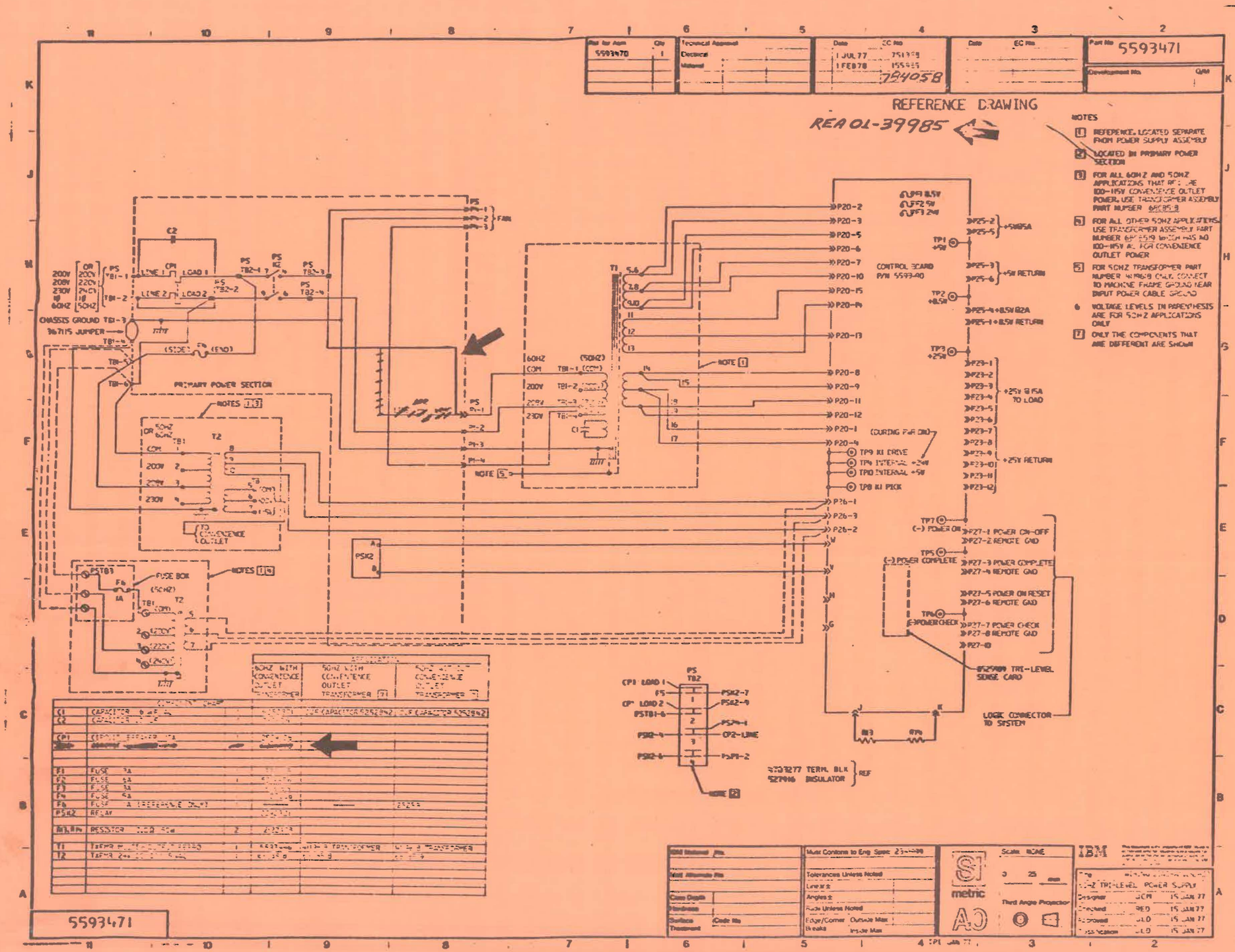

Part No 5593471
REFERENCE DRAWING
REA 01-39985
NOTES
1 REFERENCE, LOCATED SEPARATE FROM POWER SUPPLY ASSEMBLY
2 LOCATED IN PRIMARY POWER SECTION
3 FOR ALL 60HZ AND 50HZ APPLICATIONS THAT REQUIRE 100-115V CONVENIENCE OUTLET POWER, USE TRANSFORMER ASSEMBLY PART NUMBER 68C8518
4 FOR ALL OTHER 50HZ APPLICATIONS, USE TRANSFORMER ASSEMBLY PART NUMBER 68C8519 WHICH HAS NO 100-115V AC FOR CONVENIENCE OUTLET POWER
5 FOR 50HZ TRANSFORMER PART NUMBER 41196/8 ONLY, CONNECT TO MACHINE FRAME GROUND NEAR INPUT POWER CABLE GROUND
6 VOLTAGE LEVELS IN PARENTHESIS ARE FOR 50HZ APPLICATIONS ONLY
7 ONLY THE COMPONENTS THAT ARE DIFFERENT ARE SHOWN
PRIMARY POWER SECTION
CHASSIS GROUND
CONTROL BOARD P/N 5593-90
FUSE BOX
LOGIC CONNECTOR TO SYSTEM
5593471

Part No.	5593471
Development No.	Q/M

Part No. & Name	Qty
5593470	1

Date	EC No
1 JUL 77	751358
1 FEB 78	755985

REFERENCE DRAWING

REA 91-04696 PICK-UP EC 784027

NOTES

1. REFERENCE, LOCATED SEPARATE FROM POWER SUPPLY ASSEMBLY
2. LOCATED IN PRIMARY POWER SECTION
3. FOR ALL 60HZ AND 50HZ APPLICATIONS THAT REQUIRE 100-115V CONVENIENCE OUTLET POWER, USE TRANSFORMER ASSEMBLY PART NUMBER 6808518
4. FOR ALL OTHER 50HZ APPLICATIONS USE TRANSFORMER ASSEMBLY PART NUMBER 6908519 WHICH HAS NO 100-115V AC FOR CONVENIENCE OUTLET POWER
5. FOR 50HZ TRANSFORMER PART NUMBER 4117618 ONLY, CONNECT TO MACHINE FRAME GROUND NEAR INPUT POWER CABLE GROUND
6. VOLTAGE LEVELS IN PARENTHESIS ARE FOR 50HZ APPLICATIONS ONLY
7. ONLY THE COMPONENTS THAT ARE DIFFERENT ARE SHOWN

APPLICATION	60HZ WITH CONVENIENCE OUTLET TRANSFORMER	50HZ WITH CONVENIENCE OUTLET TRANSFORMER [7]	50HZ WITHOUT CONVENIENCE OUTLET TRANSFORMER [7]
REQUIREMENT CHART			
C1 CAPACITOR 6 mF AC	525287	1 UF CAPACITOR 5252842	1 UF CAPACITOR 5252842
C2 CAPACITOR .01 UF	737825		
CP1 CIRCUIT BREAKER 5A	257422		
CP2 CIRCUIT BREAKER 5A	521420		
F1 FUSE 3A	228166		
F2 FUSE 8A	521456		
F3 FUSE 3A	228166		
F4 FUSE 5A	10 000		
F6 FUSE 1A (REFERENCE ONLY)	——	——	252581
K1 RELAY	224232		
R1 THRU R4 RESISTOR 10.00 50W	2 222128		
T1 TRANSFORMER 1 PH 60HZ	REQUIRED W/ 60HZ CONVENIENCE TRANSFORMER	W/ 50HZ CONVENIENCE TRANSFORMER	W/ 50HZ TRANSFORMER
T2 TRANSFORMER 2 PH 60HZ	REQUIRED	REQUIRED	NOT REQ'D

Title	WIRING DIAGRAM(50HZ)
	50HZ TRI-LEVEL POWER SUPPLY
Designer	JCM 15 JAN 77
Checked	RED 15 JAN 77
Approved	JLD 15 JAN 77
Classification	JLD 15 JAN 77

5593471

4 TPI JAN 77

YF005

Ref for Asm	Qty	Technical Approval		Date	EC No.	Date	EC No.	Part No. 5593471
5593470	1	Electrical		1 JUL77	751358			Development No. Q/M
		Material		1 FEB78	155985			

REFERENCE DRAWING

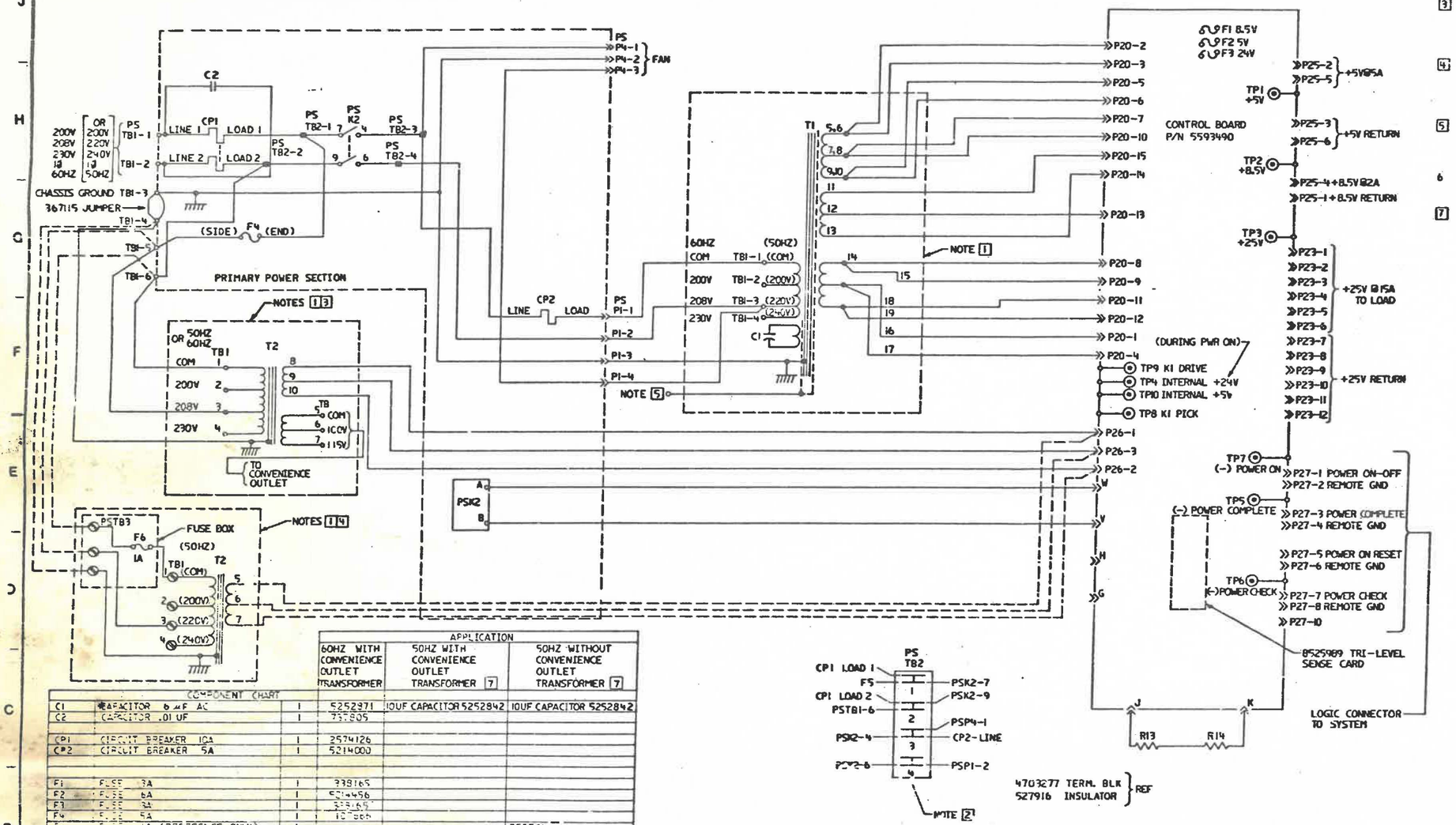

NOTES

1. REFERENCE, LOCATED SEPARATE FROM POWER SUPPLY ASSEMBLY
2. LOCATED IN PRIMARY POWER SECTION
3. FOR ALL 60HZ AND 50HZ APPLICATIONS THAT REQUIRE 100-115V CONVENIENCE OUTLET POWER, USE TRANSFORMER ASSEMBLY PART NUMBER 6808518
4. FOR ALL OTHER 50HZ APPLICATIONS USE TRANSFORMER ASSEMBLY PART NUMBER 6808519 WHICH HAS NO 100-115V AC FOR CONVENIENCE OUTLET POWER
5. FOR 50HZ TRANSFORMER PART NUMBER 4119618 ONLY. CONNECT TO MACHINE FRAME GROUND NEAR INPUT POWER CABLE GROUND
6. VOLTAGE LEVELS IN PARENTHESIS ARE FOR 50HZ APPLICATIONS ONLY
7. ONLY THE COMPONENTS THAT ARE DIFFERENT ARE SHOWN

COMPONENT CHART			APPLICATION: 60HZ WITH CONVENIENCE OUTLET TRANSFORMER	50HZ WITH CONVENIENCE OUTLET TRANSFORMER 7	50HZ WITHOUT CONVENIENCE OUTLET TRANSFORMER 7
C1	CAPACITOR 6 µF AC	1	5252971	10UF CAPACITOR 5252842	10UF CAPACITOR 5252842
C2	CAPACITOR .01 UF	1	737805		
CP1	CIRCUIT BREAKER 10A	1	2574126		
CP2	CIRCUIT BREAKER 5A	1	5214000		
F1	FUSE 3A	1	338165		
F2	FUSE 6A	1	5214456		
F3	FUSE 3A	1	338165		
F4	FUSE 5A	1	107666		
F6	FUSE 1A (REFERENCE ONLY)	1	—	—	252591
PSK2	RELAY	1	2042321		
R13,R14	RESISTOR 10.0Ω 50W	2	2122428		
T1	TXFMR MULTI-OUTPUT FERRO	1	5593446	4119618 TRANSFORMER	4119618 TRANSFORMER
T2	TXFMR 24V DC 100/1.5 VAC	1	6808518	6808518	6808519

IBM Material	No.	Must Conform to Eng Spec: 2343999	
Mail Alternate	No.	Tolerances Unless Noted	
Case Depth		Linear ±	
Hardness		Angles ±	
Surface Treatment	Code No	Radii Unless Noted	
		Edge/Corner Breaks	Outside Max / Inside Max

SI metric AO

Scale. NONE

0 25 mm

Third Angle Projection

IBM

This document is the property of IBM. It is not a submitted but for the purpose of a reason for duplication or for the performance of work for IBM. A copyright may be reserved to the IBM purpose of this document.

Title	WIRING DIAGRAM (50HZ)	
50HZ TRI-LEVEL POWER SUPPLY		
Designer	JCM	15 JAN 77
Checked	RED	15 JAN 77
Approved	JLD	15 JAN 77
Classification	JLD	15 JAN 77

5593471

TPI JAN 77

Rel for Asm	Qty
5593470	1

Technical Approval	
Electrical	
Material	

Date	EC No
1 JUL 77	751358
5 DEC 77	751358C
4 MAY 78	784029

Date	EC No

Part No: 5593490

Development No

1-2

NOTES

1. FUSE CLIP PART NUMBER 1462581 MUST BE ORIENTATED AS SHOWN
2. STANDOFFS MUST WITHSTAND A MINIMUM TORQUE OF 13 CM/KGF AFTER SWAGING AND SOLDERING
3.
4.
5. MARK THE FOLLOWING INFORMATION ON THE BACK SIDE OF CARD AS SHOWN WITH 1.5 HIGH NON-MAGNETIC GOTHIC PRINTING APPROXIMATELY AS SHOWN.
   ASM 5593490
   E.C.
   DATE OF ASM
6. COMPONENT DESIGNATIONS IN PARENTHESIS ARE FOR REFERENCE ONLY
7.
8. HEADER MUST BE ORIENTATED AS SHOWN
9. STANDOFF TO BE INSERTED FROM BACK SIDE OF CARD ONLY. STANDOFF THREADS TO BE FREE OF ANY SOLDER
10. COMPONENT MUST BE 3.18 OFF SURFACE OF BOARD
11. HEADER MUST BE ORIENTATED SO MISSING PIN IS IN POSITION INDICATED BY ARROW
12. LANDS AROUND HOLES F1-F12 TO BE FREE OF ANY SOLDER WITHIN 4 OF EDGE OF HOLE
13. THIS HOLE FOR MANUFACTURING PURPOSES ONLY

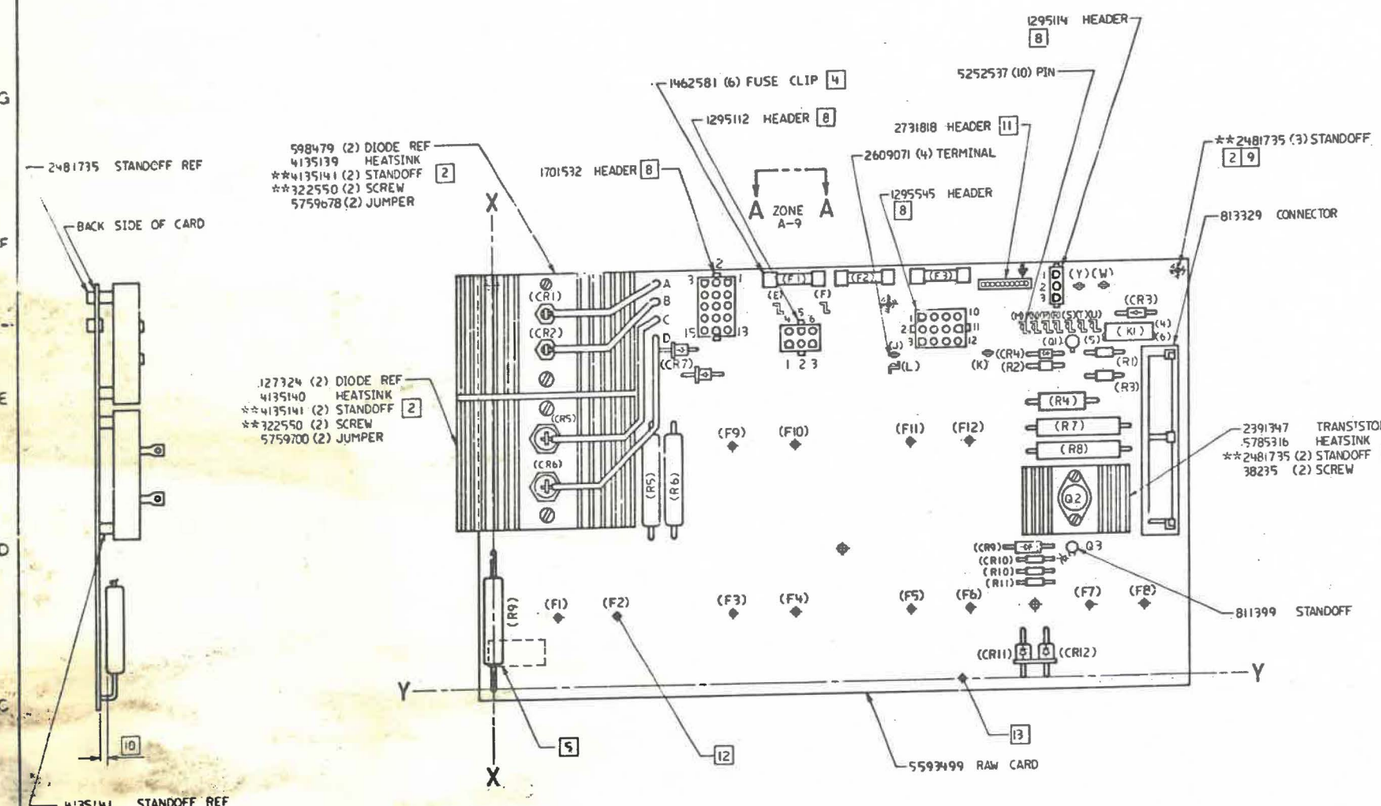

ELECTRICAL COMPONENT CHART			
COMPONENT	DESCRIPTION	QUANTITY	PART NUMBER
R1	RES 2 KΩ .5 W	1	317019
R2	RES 47Ω .5 W	1	216421
R3	RES 4.3 KΩ .5 W	1	317023
R4	RES 330 Ω 5 W	1	207325 10
R5, R6	RES 10 Ω 10 W	2	556485 10
R7	RES 36 Ω 10 W	1	2396721 10
R8	RES 250 Ω 10W	1	2102363 10
R9	RES 30 Ω 10 W	1	2154981 10
R10	RES 620 Ω .5 W	1	317013
R11	RES 300 Ω .5 W	1	317008
CR1, GR2	DIODE 10 A	2	598479
CR3, CR4	DIODE (AM)	2	2111232
CR5, CR6	DIODE 30 A	2	127324
CR7, CR8 CR11, CR12	DIODE 3 A	4	5252534
CR9	DIODE (GI)	1	2414810
CR10	DIODE (BLS)	1	492496
F1, F3	FUSE 3A 125 V	2	338165
F2	FUSE 6A 250V	1	5214456
K1	RELAY	1	5252649
Q1	TRANSISTOR 237	1	2396887
Q2	TRANSISTOR 359	1	2391347
Q3	TRANSISTOR 194	1	2414818

**DENOTES MULTIPLE USAGE

IBM Material No	
Matl Alternate No	
Case Depth	
Hardness	
Surface Treatment	Code No

Must Conform to Eng Spec 2343999, 890913

Tolerances Unless Noted

Linear ±

Angles ±

Radii Unless Noted

Edge/Corner Breaks: Outside Max / Inside Max

metric A0

Scale 1/1

0 25 mm

Third Angle Projection

IBM

YF006

Title: CARD ASSEMBLY - [illegible] CARD

Designer	REO	26JAN77
Checked	PS	26JAN77
Approved	[illegible]	26 JAN 77
[illegible]		[illegible]

1-2

5593490

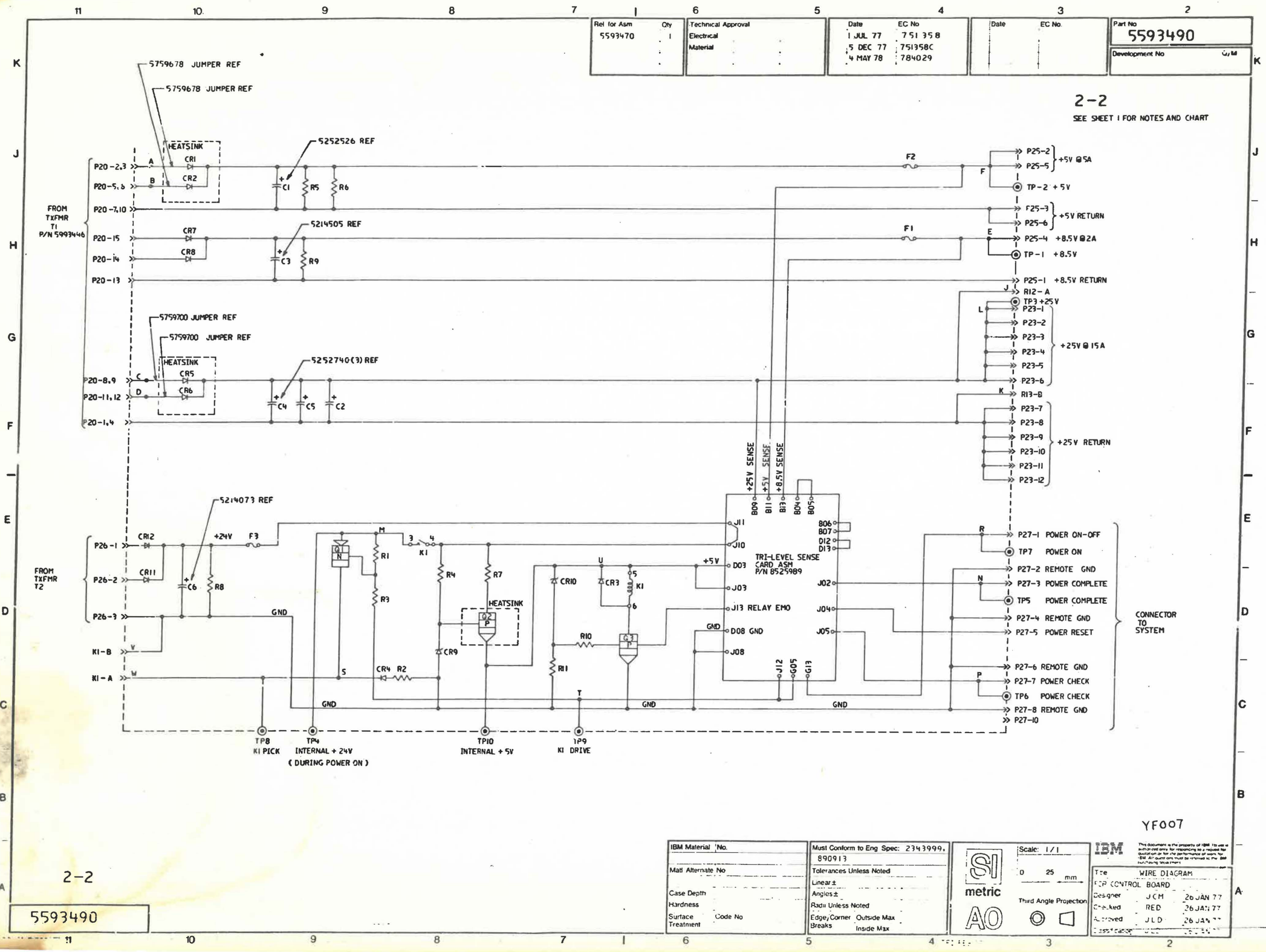

Rel for Asm 5593470 Qty 1
Technical Approval
Electrical
Material
Date 1 JUL 77 EC No 751358
5 DEC 77 751358C
4 MAY 78 784029
Part No 5593490
Development No
2-2
SEE SHEET 1 FOR NOTES AND CHART
5759678 JUMPER REF
5759678 JUMPER REF
HEATSINK
5252526 REF
5214505 REF
5759700 JUMPER REF
5759700 JUMPER REF
5252740(3) REF
5214073 REF
FROM TXFMR T1 P/N 5993446
FROM TXFMR T2
P20-2,3
P20-5,6
P20-7,10
P20-15
P20-14
P20-13
P20-8,9
P20-11,12
P20-1,4
P26-1
P26-2
P26-3
K1-B
K1-A
P25-2
P25-5
+5V @5A
TP-2 +5V
P25-3
P25-6
+5V RETURN
P25-4 +8.5V @2A
TP-1 +8.5V
P25-1 +8.5V RETURN
R12-A
TP3 +25V
P23-1
P23-2
P23-3
P23-4
P23-5
P23-6
+25V @15A
R13-B
P23-7
P23-8
P23-9
P23-10
P23-11
P23-12
+25V RETURN
+25V SENSE
+5V SENSE
+8.5V SENSE
TRI-LEVEL SENSE CARD ASM P/N 8525989
J13 RELAY EMO
D08 GND
P27-1 POWER ON-OFF
TP7 POWER ON
P27-2 REMOTE GND
P27-3 POWER COMPLETE
TP5 POWER COMPLETE
P27-4 REMOTE GND
P27-5 POWER RESET
P27-6 REMOTE GND
P27-7 POWER CHECK
TP6 POWER CHECK
P27-8 REMOTE GND
P27-10
CONNECTOR TO SYSTEM
TP8 K1 PICK
TP4 INTERNAL + 24V (DURING POWER ON)
TP10 INTERNAL + 5V
TP9 K1 DRIVE
GND
YF007
IBM Material No.
Matl Alternate No
Case Depth
Hardness
Surface Treatment
Code No
Must Conform to Eng Spec: 2343999, 890913
Tolerances Unless Noted
Linear ±
Angles ±
Radii Unless Noted
Edge/Corner Breaks
Outside Max
Inside Max
SI metric
AO
Scale: 1/1
0 25 mm
Third Angle Projection
IBM
Title WIRE DIAGRAM
FOR CONTROL BOARD
Designer JCM 26 JAN 77
Checked RED 26 JAN 77
Approved JLD 26 JAN 77
2-2
5593490

C 4703184

OPER PANEL SWITCHES AND LIGHTS

PART NO 4703184 | LOGIC PG NO ZA002

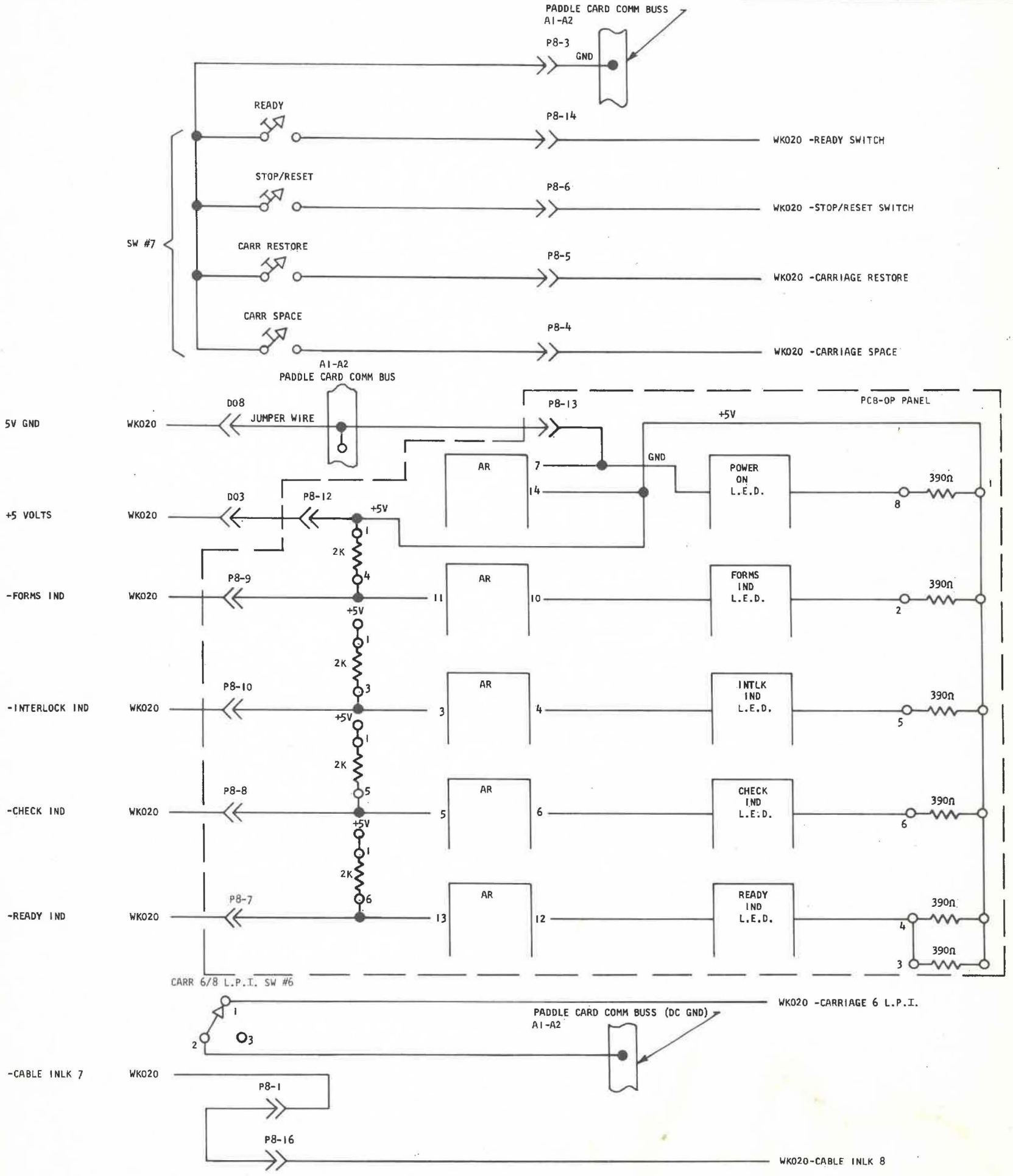

"THIS DOCUMENT IS THE PROPERTY OF IBM. ITS USE IS AUTHORIZED ONLY FOR RESPONDING TO A REQUEST FOR QUOTATION OR FOR THE PERFORMANCE OF WORK FOR IBM. ALL QUESTIONS MUST BE REFERRED TO THE IBM PURCHASING DEPARTMENT.

IBM

NAME	OPER PANEL SWITCHES AND LIGHTS			
DESIGN			SHT OF	
DETAIL	[illegible]	2FEB77	VD FEB77	
CHECK	G.D.B.	7FEB77	CLASSIFICATION	
APPRO	R.C.H.	9FEB77	R.C.H.	28FEB77

	DATE	CHANGE NO		DATE	CHANGE NO
	24JAN77	149529U			
	10AUG77	359424			
	6DEC77	356703			

MUST CONFORM TO ENG SPEC	DEVELOPMENT NO	LOGIC PG NO
		ZAOO2

4703184 C

MADE IN U.S.A. VERTICAL ELECTRICAL FORMAT ANTIHOCLOTH N6501

4703187 C

MOD II

PART NO 4703187 | LOGIC PG NO ZA010

TOP CARD CONNECTOR

HMR LATCH CARD	Y13	-FIRE	2	Y13	HMR DRVR CARD	D02	ZA1C0, ZA120 -HMR DRVR	2
	Y33	-FIRE	4	Y33		B04	ZA100, ZA120 -HMR DRVR	4
	Y12	-FIRE	6	Y12		B03	ZA100, ZA120 -HMR DRVR	6
	Y32	-FIRE	8	Y32		B06	ZA100, ZA120 -HMR DRVR	8
	Y11	-FIRE	10	Y11		B02	ZA100, ZA120 -HMR DRVR	10
	Y31	-FIRE	12	Y31		D06	ZA100, ZA120 -HMR DRVR	12
	Y10	-FIRE	14	Y10		M07	ZA100, ZA120 -HMR DRVR	14
	Y30	-FIRE	16	Y30		P02	ZA100, ZA120 -HMR DRVR	16
	Y09	-FIRE	18	Y09		M10	ZA100, ZA120 -HMR DRVR	18
	Y29	-FIRE	20	Y29		S10	ZA100, ZA120 -HMR DRVR	20
	Y28	-FIRE	22	Y28		M02	ZA100, ZA120 -HMR DRVR	22
	Y07	-FIRE	24	Y07		U05	ZA100, ZA120 -HMR DRVR	24
	Y27	-FIRE	26	Y27		P06	ZA100, ZA120 -HMR DRVR	26
	Y06	-FIRE	28	Y06		U10	ZA100, ZA120 -HMR DRVR	28
	Y26	-FIRE	30	Y26		S04	ZA100, ZA120 -HMR DRVR	30
	Y05	-FIRE	32	Y05		S05	ZA100, ZA120 -HMR DRVR	32
	Y25	-FIRE	34	Y25		J13	ZA100, ZA120 -HMR DRVR	34
	Y04	-FIRE	36	Y04		P10	ZA100, ZA120 -HMR DRVR	36
	Y24	-FIRE	38	Y24		M06	ZA100, ZA120 -HMR DRVR	38
	Y23	-FIRE	40	Y23		J12	ZA100, ZA120 -HMR DRVR	40
	Y02	-FIRE	42	Y02		D07	ZA100, ZA120 -HMR DRVR	42
	Y22	-FIRE	44	Y22		D10	ZA100, ZA120 -HMR DRVR	44
	X13	-FIRE	46	X13		D04	ZA100, ZA120 -HMR DRVR	46
	X33	-FIRE	48	X33		J05	ZA100, ZA120 -HMR DRVR	48
	X12	-FIRE	50	X12		G02	ZA100, ZA120 -HMR DRVR	50
	X32	-FIRE	52	X32		D09	ZA100, ZA120 -HMR DRVR	52
	X11	-FIRE	54	X11		B07	ZA100, ZA120 -HMR DRVR	54
	X31	-FIRE	56	X31		G05	ZA100, ZA120 -HMR DRVR	56
	X10	-FIRE	58	X10		D11	ZA100, ZA120 -HMR DRVR	58
	X30	-FIRE	60	X30		B11	ZA100, ZA120 -HMR DRVR	60
	X09	-FIRE	62	X09		J09	ZA100, ZA120 -HMR DRVR	62
	X29	-FIRE	64	X29		G03	ZA100, ZA120 -HMR DRVR	64
	X28	-FIRE	66	X28		G10	ZA100, ZA120 -HMR DRVR	66
	X07	-FIRE	68	X07		G07	ZA100, ZA120 -HMR DRVR	68
	X27	-FIRE	70	X27		G06	ZA100, ZA120 -HMR DRVR	70
	X06	-FIRE	72	X06		D13	ZA100, ZA120 -HMR DRVR	72
	X26	-FIRE	74	X26		G04	ZA100, ZA120 -HMR DRVR	74
	X05	-FIRE	76	X05		J04	ZA100, ZA120 -HMR DRVR	76
	X25	-FIRE	78	X25		J06	ZA100, ZA120 -HMR DRVR	78
	X04	-FIRE	80	X04		J11	ZA100, ZA120 -HMR DRVR	80
	X24	-FIRE	82	X24		J07	ZA100, ZA120 -HMR DRVR	82
	X23	-FIRE	84	X23		G11	ZA100, ZA12C -HMR DRVR	84
	X02	-FIRE	86	X02		B12	ZA100, ZA120 -HMR DRVR	86
	X22	-FIRE	88	X22		J10	ZA100, ZA120 -HMR DRVR	88
	Z13	-FIRE	90	Z13		S02	ZA100, ZA120 -HMR DRVR	90
	Z33	-FIRE	92	Z33		D05	ZA100, ZA120 -HMR DRVR	92
	Z12	-FIRE	94	Z12		U04	ZA100, ZA120 -HMR DRVR	94
	X32	-FIRE	96	Z32		B05	ZA100, ZA120 -HMR DRVR	96
	Z11	-FIRE	98	Z11		P13	ZA100, ZA120 -HMR DRVR	98
	Z31	-FIRE	100	Z31		U07	ZA100, ZA120 -HMR DRVR	100
	Z10	-FIRE	102	Z10		P12	ZA100, ZA120 -HMR DRVR	102
	Z30	-FIRE	104	Z30		P05	ZA100, ZA120 -HMR DRVR	104
	Z09	-FIRE	106	Z09		U02	ZA100, ZA120 -HMR DRVR	106
	Z29	-FIRE	108	Z29		J02	ZA100, ZA120 -HMR DRVR	108
	Z28	-FIRE	110	Z28		U12	ZA100, ZA120 -HMR DRVR	110
	Z07	-FIRE	112	Z07		U09	ZA100, ZA120 -HMR DRVR	112
	Z27	-FIRE	114	Z27		U13	ZA100, ZA120 -HMR DRVR	114
	Z06	-FIRE	116	Z06		S07	ZA100, ZA120 -HMR DRVR	116
	Z26	-FIRE	118	Z26		P09	ZA100, ZA120 -HMR DRVR	118
	Z05	-FIRE	120	Z05		B10	ZA100, ZA120 -HMR DRVR	120
	Z25	-FIRE	122	Z25		S06	ZA100, ZA120 -HMR DRVR	122
	Z04	-FIRE	124	Z04		M03	ZA100, ZA120 -HMR DRVR	124
	Z24	-FIRE	126	Z24		P04	ZA100, ZA120 -HMR DRVR	126
	Z23	-FIRE	128	Z23		U06	ZA100, ZA120 -HMR DRVR	128
	Z02	-FIRE	130	Z02		S03	ZA100, ZA120 -HMR DRVR	130
	Z22	-FIRE	132	Z22		M05	ZA100, ZA120 -HMR DRVR	132

A1-J2

	B09	WK010 -NOT PRINT TIME
A1-M2	B10	ZA120, ZA040 +NOT PRINT TIME CHECK
	D11	WK010 -DATA PARITY CHECK

WK010 -DATA BIT 0	D02
WK010 -DATA BIT 1	B02
WK010 -DATA BIT 2	B03
WK010 -DATA BIT 3	D04
WK010 -DATA BIT 4	D06
WK010 -DATA BIT 5	D07
WK010 -DATA BIT 6	B08
WK010 -DATA BIT 7	D09
WK010 -STROBE	B13
WK010 -PARITY BIT	D05
WK010 -FIRE TIER 1	B11
WK010 -FIRE TIER 2	B05
WK010 -FIRE TIER 3	B07
WK010 -FIRE TIER 4	B04
WK010 -FIRE TIER 5	B06
ZA030 +POR	D10
ZA035 +PRINT SUB SCAN	D13

NOTE [1.] — B12

CONTINUED ON ZA020

NOTE:

[1.] FLOAT PIN M2B12 ON MOD II.

"THIS DOCUMENT IS THE PROPERTY OF IBM. ITS USE IS AUTHORIZED ONLY FOR RESPONDING TO A REQUEST FOR QUOTATION OR FOR THE PERFORMANCE OF WORK FOR IBM. ALL QUESTIONS MUST BE REFERRED TO THE IBM PURCHASING DEPARTMENT.

IBM

NAME	HMR LATCH & HMR DRVR		
	EVEN MOD II		
DESIGN			SHT OF
DETAIL	L.A.I.	13JAN77	VD FEB77
CHECK	G.D.B.	18JAN77	CLASSIFICATION
APPRO	R.C.H.	9FEB77	Fogl 28FEB77

	DATE	CHANGE NO		DATE	CHANGE NO
	22JAN77	1495290			
	10AUG77	359424			
	6DEC77	356703			

MUST CONFORM TO ENG SPEC	DEVELOPMENT NO	LOGIC PG NO
		ZA010

4703187 C

820-0134-1 IBM 7000022004 VERTICAL ELECTRICAL FORMAT ASTROCLOTH MODIF

4703188 C

MOD III

PART NO 4703188 | LOGIC PG NO ZA020

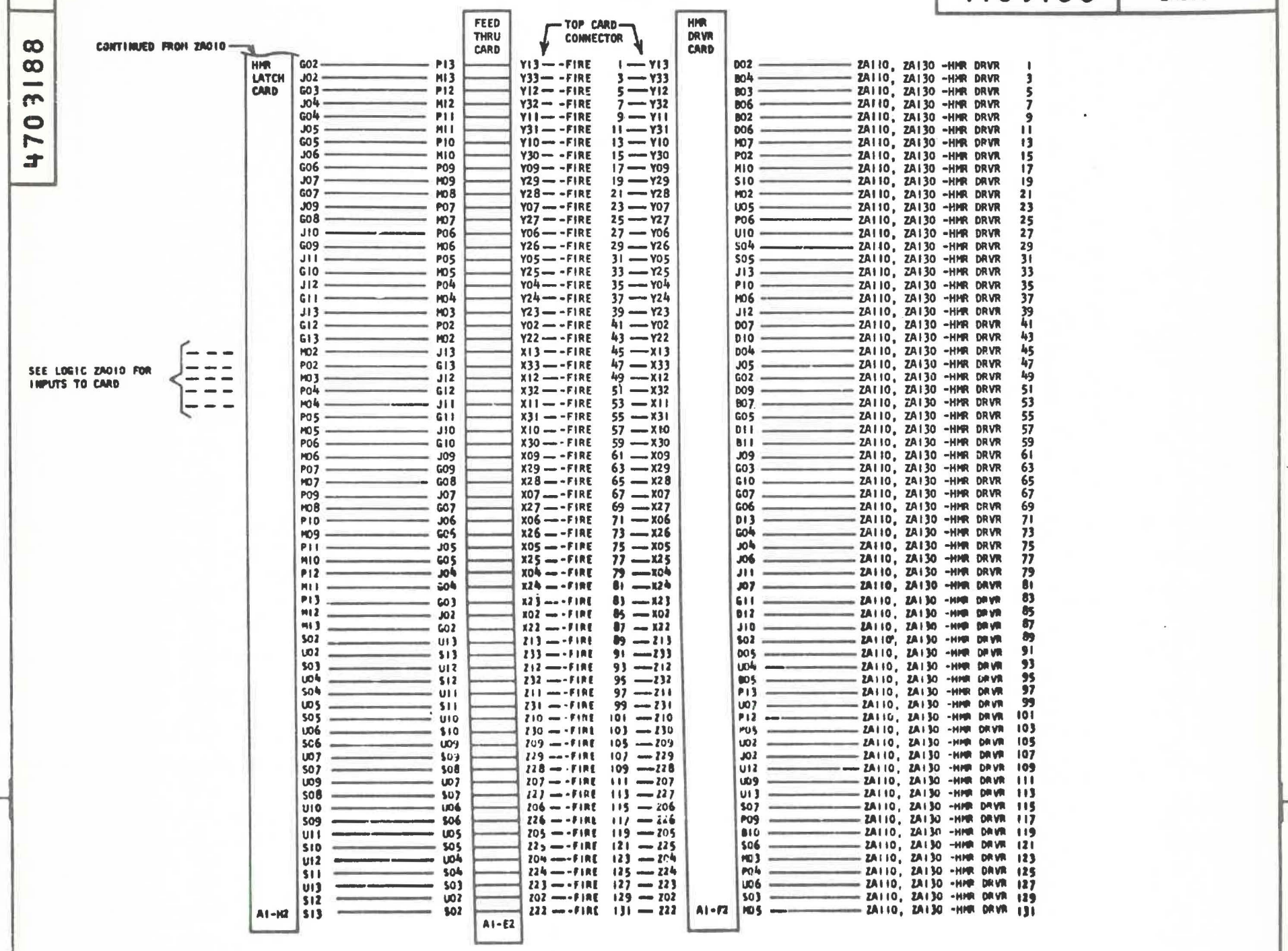

"THIS DOCUMENT IS THE PROPERTY OF IBM. ITS USE IS AUTHORIZED ONLY FOR RESPONDING TO A REQUEST FOR QUOTATION OR FOR THE PERFORMANCE OF WORK FOR IBM. ALL QUESTIONS MUST BE REFERRED TO THE IBM PURCHASING DEPARTMENT

IBM					DATE	CHANGE NO		DATE	CHANGE NO
NAME	HMR LATCH & HMR DRVR				24JAN77	1495290			
	ODD MOD CI				6DEC77	356703			
DESIGN			SHT OF						
DETAIL	L.A.I.	11JAN77	VB FEB77						
CHECK	G.D.B.	13JAN77	CLASSIFICATION	MUST CONFORM TO ENG SPEC	DEVELOPMENT NO	LOGIC PG NO			
APPRO	R.C.H.	9FEB77	PGA 8FEB77			ZA020			

4703188 C

620-0134-1 ENGG PERMASEAL VERTICAL ELECTRICAL FORMAT AUTOMATIC ASSY

PART NO 4703189 | LOGIC PG NO ZA030

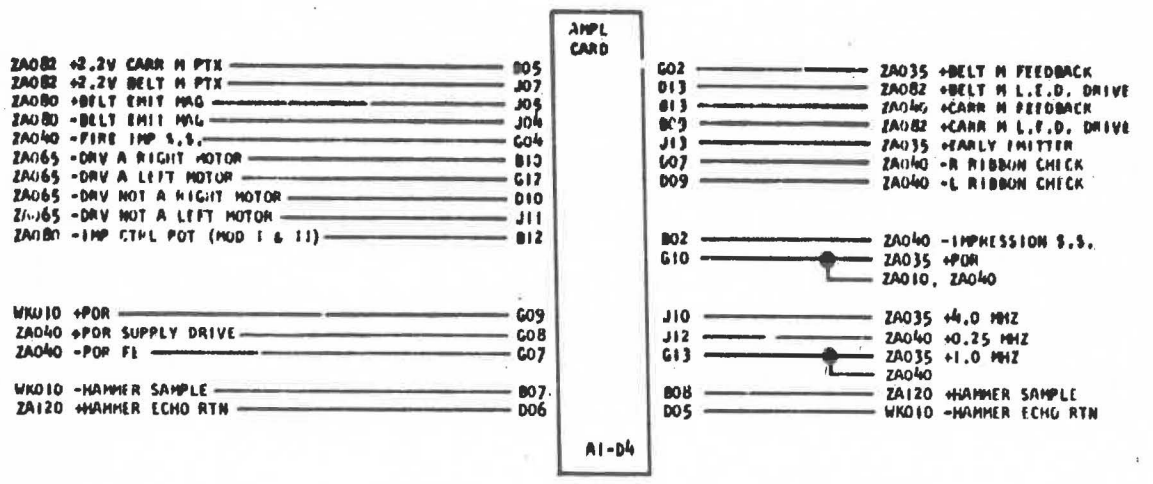

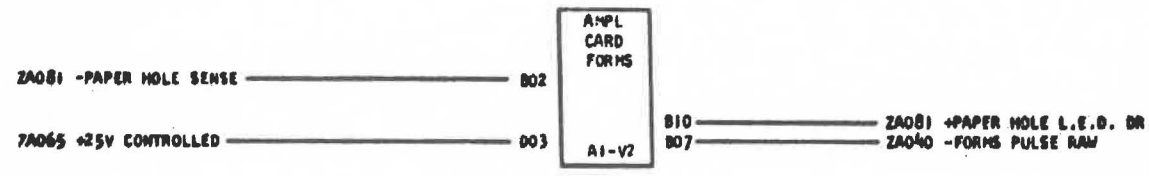

"THIS DOCUMENT IS THE PROPERTY OF IBM, ITS USE IS AUTHORIZED ONLY FOR RESPONDING TO A REQUEST FOR QUOTATION OR FOR THE PERFORMANCE OF WORK FOR IBM. ALL QUESTIONS MUST BE REFERRED TO THE IBM PURCHASING DEPARTMENT.

IBM						DATE	CHANGE NO		DATE	CHANGE NO
NAME	AMPLIFIER CARD					24JAN77	1495290			
						6DEC77	356703			
DESIGN			SHT OF			18APR78	784041			
DRAFTSMAN	L.A.I.	2FEB77	VD FEB77							
CHECK	G.D.B.	5FEB77	CLASSIFICATION		MUST CONFORM TO ENG SPEC	DEVELOPMENT NO		LOGIC PG NO		
APPROV	R.C.H.	9FEB77	R.C.H.	28FEB77				ZA030		

4703189 C

C

4703190

PART NO 4703190 | LOGIC PG NO ZA035

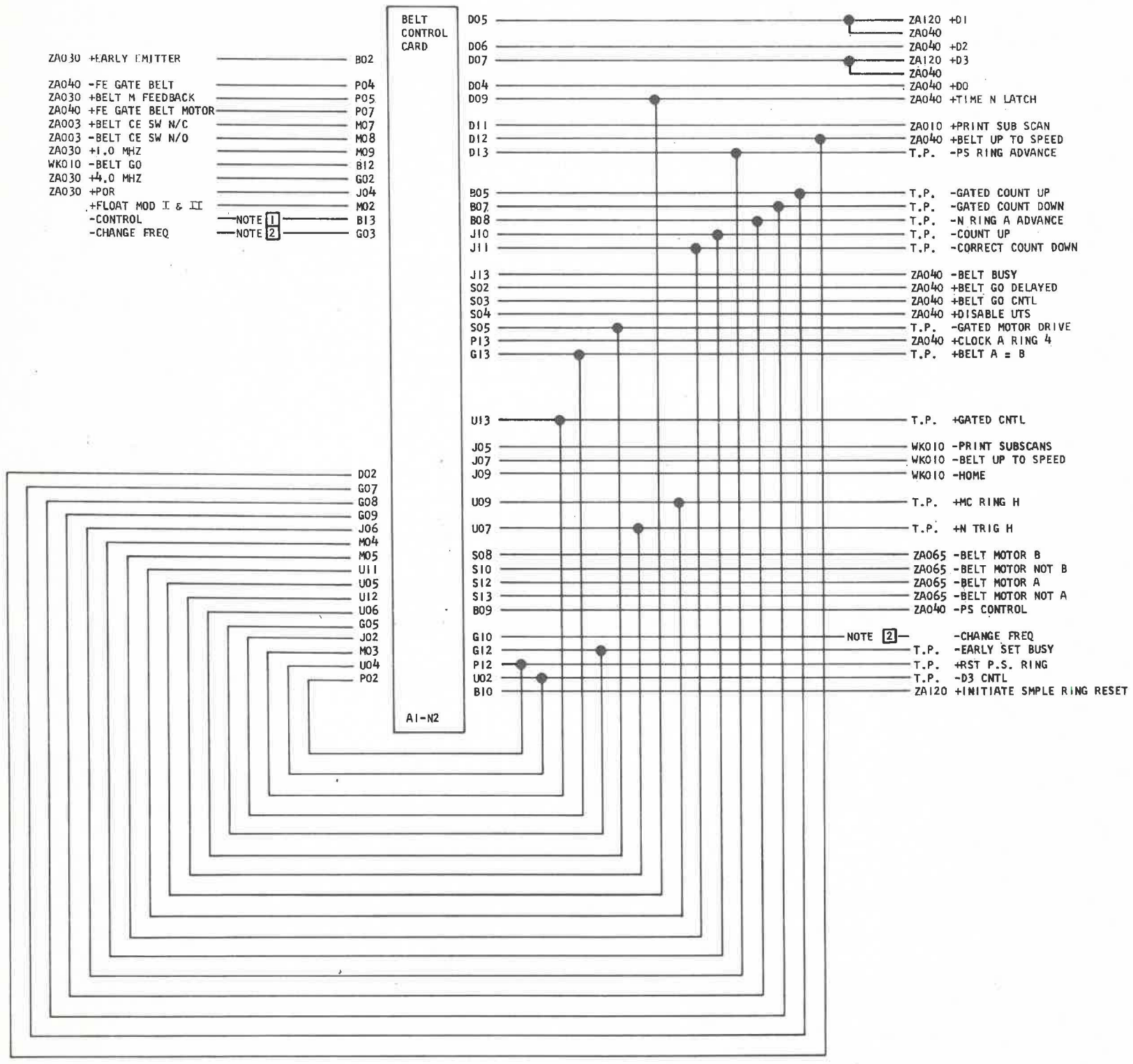

NOTES

T.P. = TEST POINT ONLY

1. JUMPER PIN N2B13 TO N2D08 (GND) FOR ALL MODELS.
2. JUMPER PIN N2G03 TO N2G10 FOR MOD I & II.

"THIS DOCUMENT IS THE PROPERTY OF IBM. ITS USE IS AUTHORIZED ONLY FOR RESPONDING TO A REQUEST FOR QUOTATION OR FOR THE PERFORMANCE OF WORK FOR IBM. ALL QUESTIONS MUST BE REFERRED TO THE IBM PURCHASING DEPARTMENT.

IBM					DATE	CHANGE NO		DATE	CHANGE NO
NAME	BELT CONTROL				24JAN77	149529U			
					10AUG77	359424			
DESIGN			SHT OF		6DEC77	356703			
DETAIL	L.A.I.	2FEB77	VD FEB77						
CHECK	G.D.B.	4FEB77	CLASSIFICATION	MUST CONFORM TO ENG SPEC	DEVELOPMENT NO		LOGIC PG NO		
APPRO	R.C.H.	9FEB77	28FEB77				ZA035		

4703190 C

MRO: 780522204 VERTICAL ELECTRICAL FORMAT ASTROCLOTH N6507

PART NO 4703191 | LOGIC PG NO ZA040

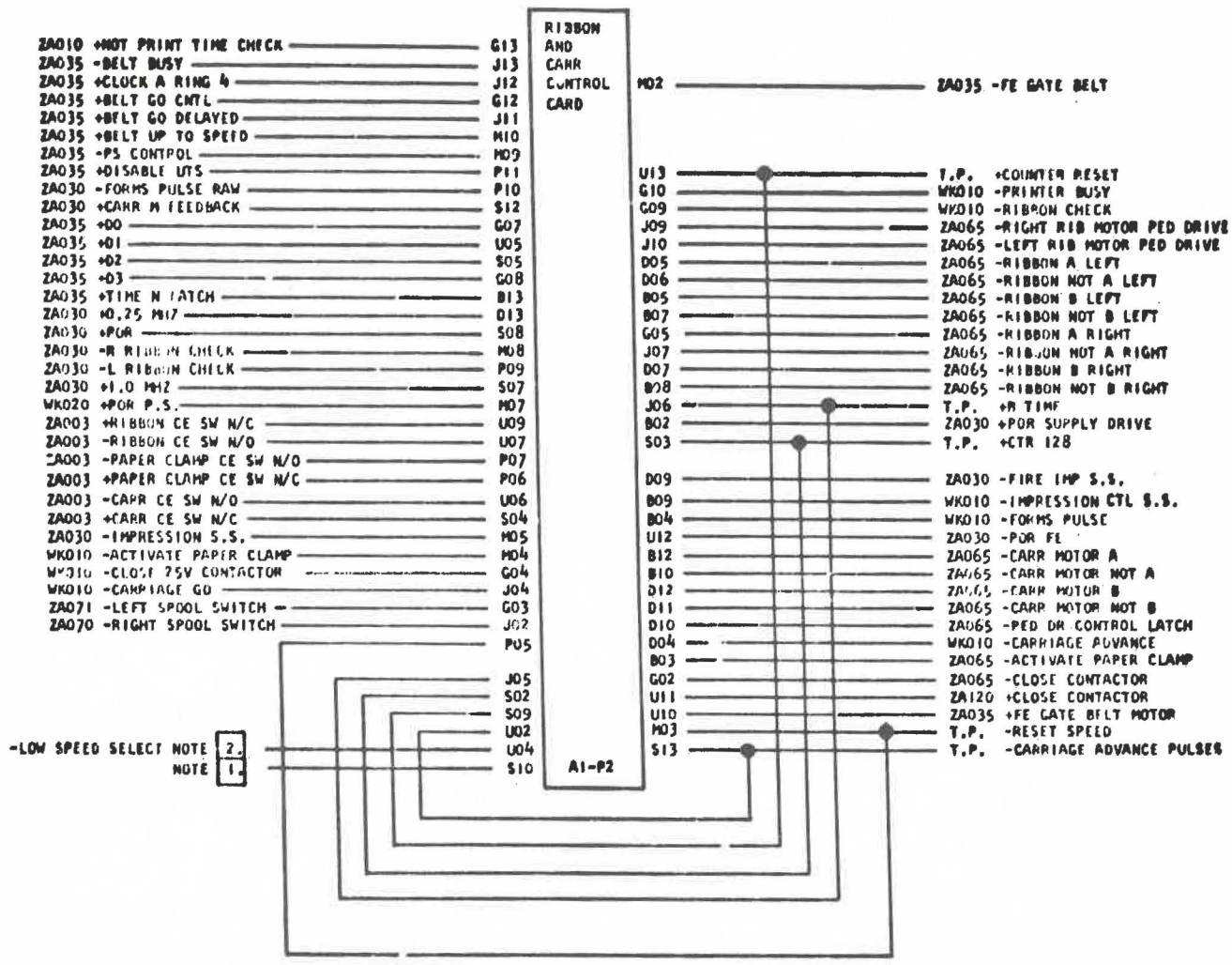

T.P. = TEST POINT ONLY

NOTES:

1. I/O PIN RESERVED FOR FEATURE WIRING.
2. I/O PIN USED FOR CARD TEST ONLY.

"THIS DOCUMENT IS THE PROPERTY OF IBM, ITS USE IS AUTHORIZED ONLY FOR RESPONDING TO A REQUEST FOR QUOTATION OR FOR THE PERFORMANCE OF WORK FOR IBM. ALL QUESTIONS MUST BE REFERRED TO THE IBM PURCHASING DEPARTMENT.

					DATE	CHANGE NO		DATE	CHANGE NO
NAME	RIBBON & CARRIAGE CONTROL CARD				24JAN77	1495290			
					10AUG77	359424			
DESIGN			SHT OF		6DEC77	356703			
DETAIL	L.A.I.	10JAN77	VD FEB77		18APR78	784041			
CHECK	G.D.B.	13JAN77	RELEASE ATION	MUST CONFORM TO ENG SPEC		DEVELOPMENT NO		LOGIC PG NO	
APPRO	R.C.H.	9FEB77	RDH 28FEB77					ZA040	

4703191 C

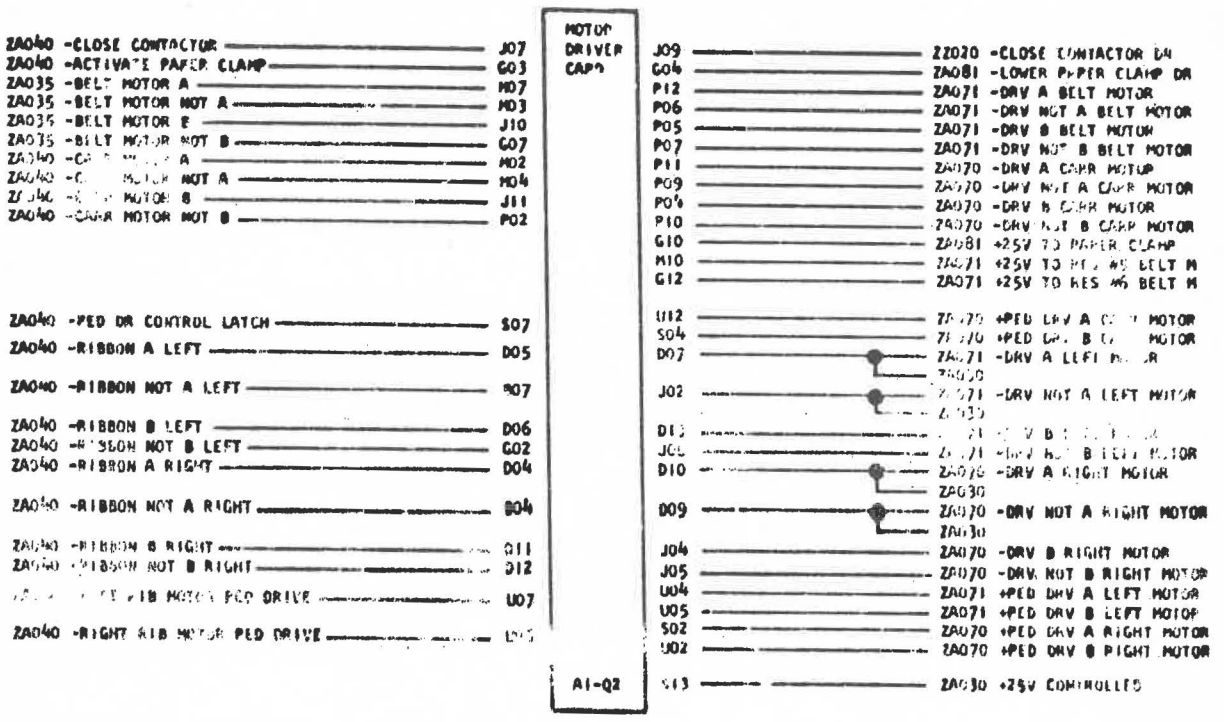

NOTE:

1. THE FOLLOWING VOLTAGE PINS ARE CONNECTED TOGETHER ON THE DRIVER CARD.
   +8.5V - B11, M11.
   +25V CLAMP (ZENER) - J12, J13.
   +25V CONTROLLED - B10, M12,B13,G10,G12,G13,M10,M12,M13,S10,S12,S13
   25V GROUND - B08, B09, S08, S09, M08, M09, S08, S09.

"THIS DOCUMENT IS THE PROPERTY OF IBM, ITS USE IS AUTHORIZED ONLY FOR RESPONDING TO A REQUEST FOR QUOTATION OR FOR THE PERFORMANCE OF WORK FOR IBM. ALL QUESTIONS MUST BE REFERRED TO THE IBM PURCHASING DEPARTMENT.

IBM						DATE	CHANGE NO		DATE	CHANGE NO
NAME	MOTOR DRIVER CARD					24JAN77	1495290			
						6DEC77	356703			
DESIGN			SHT OF			18APR78	784041			
DETAIL	L.A.I.	10JAN77	VD FEB77							
CHECK	G.D.B.	4FEB77	CLASSIFICATION		MUST CONFORM TO ENG SPEC		DEVELOPMENT NO		LOGIC PG NO	
APPROV	R.C.H.	9FEB77	RCH	28FEB77					ZA065	

4703192 C

4703193 C

PART NO 4703193 | LOGIC PG NO ZA070

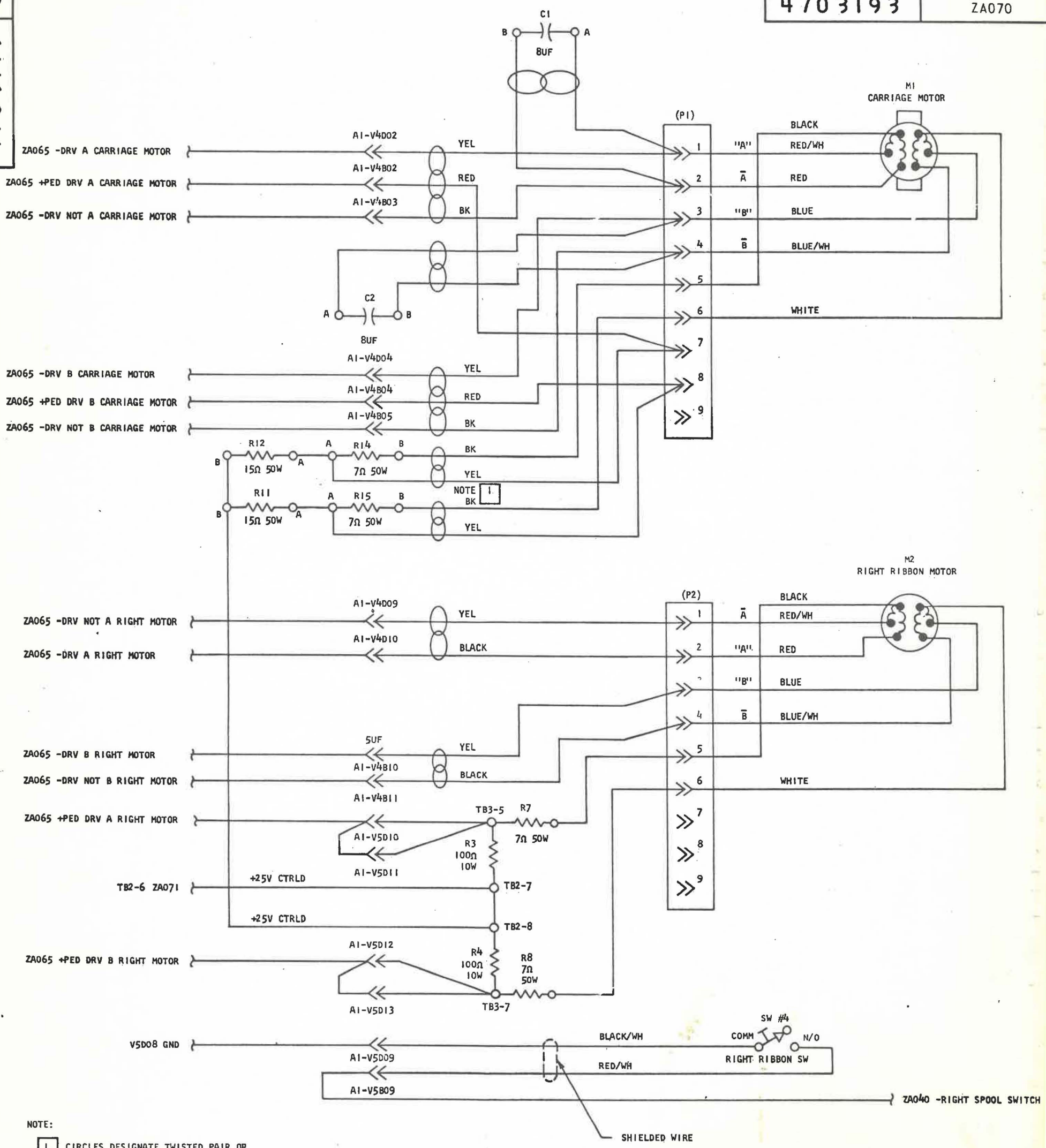

NOTE:

1. CIRCLES DESIGNATE TWISTED PAIR OR TRIPLE TWISTED WIRES.

"THIS DOCUMENT IS THE PROPERTY OF IBM. ITS USE IS AUTHORIZED ONLY FOR RESPONDING TO A REQUEST FOR QUOTATION OR FOR THE PERFORMANCE OF WORK FOR IBM. ALL QUESTIONS MUST BE REFERRED TO THE IBM PURCHASING DEPARTMENT.

IBM									
NAME	CARRIAGE MOTOR, RIGHT RIBBON					DATE	CHANGE NO		DATE	CHANGE NO
	MOTOR & RIGHT SPOOL SWITCH					24JAN77	149529U			
DESIGN			SHT OF			10AUG77	359424			
DETAIL	L.A.I.	12JAN77	VD FEB77			6DEC77	356703			
CHECK	G.D.B.	2FEB77	CLASSIFICATION			7FEB78	359422			
APPRO	R.C.H.	9FEB77	RCH.	28FEB77	MUST CONFORM TO ENG SPEC	DEVELOPMENT NO	LOGIC PG NO			
					-		ZA070			

4703193 C

620-0134 1 MRO# 780822804 VERTICAL ELECTRICAL FORMAT ASTROCLOTH N6907

PART NO 4703194 | LOGIC PG NO ZA071

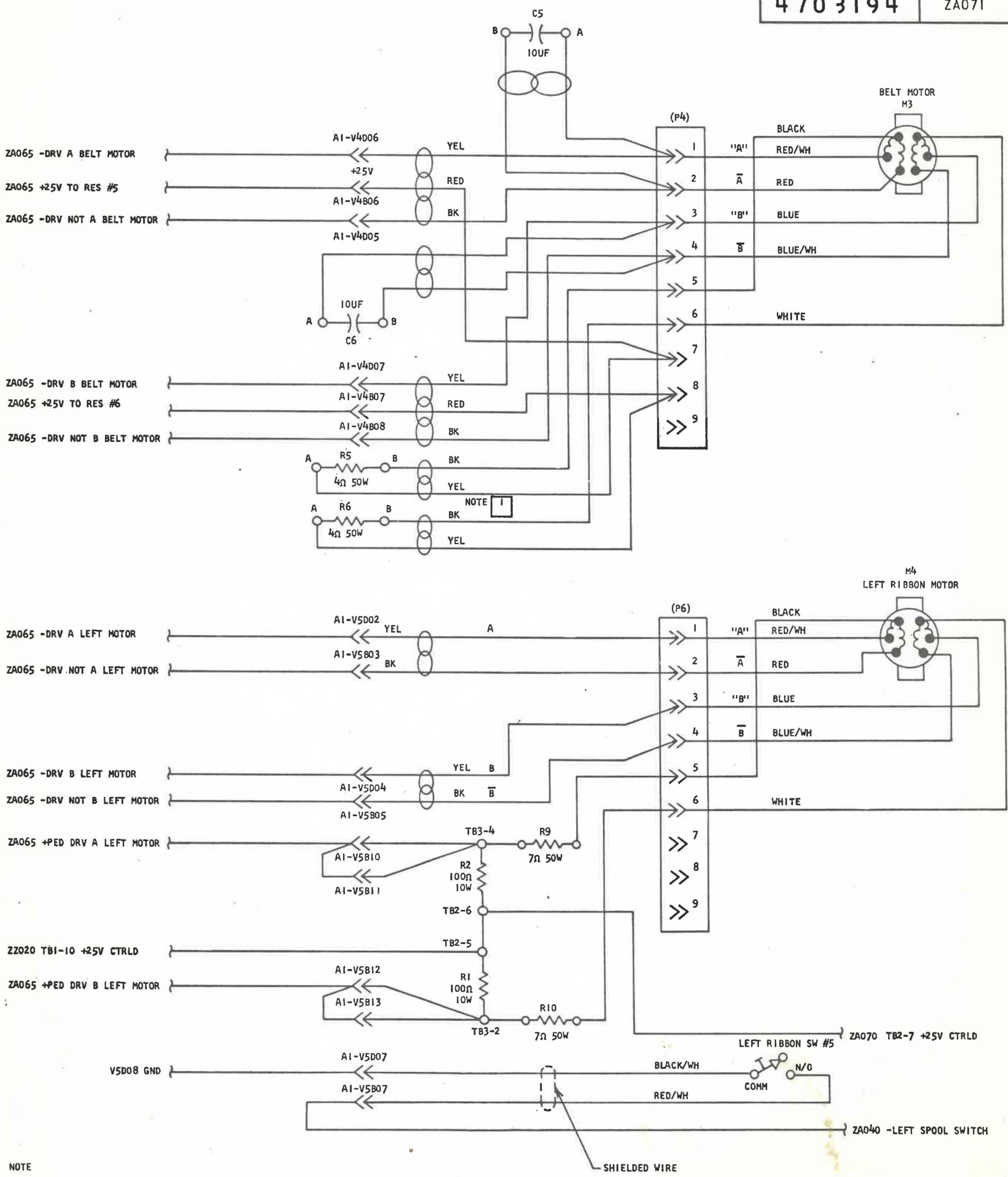

NOTE

1. CIRCLES DESIGNATE TWISTED PAIR OR TRIPLE TWISTED WIRES.

"THIS DOCUMENT IS THE PROPERTY OF IBM. ITS USE IS AUTHORIZED ONLY FOR RESPONDING TO A REQUEST FOR QUOTATION OR FOR THE PERFORMANCE OF WORK FOR IBM. ALL QUESTIONS MUST BE REFERRED TO THE IBM PURCHASING DEPARTMENT.

IBM									
NAME	BELT MOTOR, LEFT RIBBON MOTOR,								
	LEFT SPOOL SWITCH								
DESIGN			SHT OF						
DETAIL	L.A.I.	25JAN77	VD FEB77						
CHECK	G.D.B.	28JAN77	CLASSIFICATION		MUST CONFORM TO ENG SPEC		DEVELOPMENT NO		LOGIC PG NO
APPRO	R.C.H.	9FEB77	RCH	28FEB77					ZA071

	DATE	CHANGE NO		DATE	CHANGE NO
	24JAN77	149529U			
	10AUG77	359424			
	6DEC77	356703			
	7FEB78	359422			

620-0134-1 MRO# 780522204 VERTICAL ELECTRICAL FORMAT ASTROCLOTH N0907

C

4703195

PART NO 4703195 | LOGIC PG NO ZAF 01

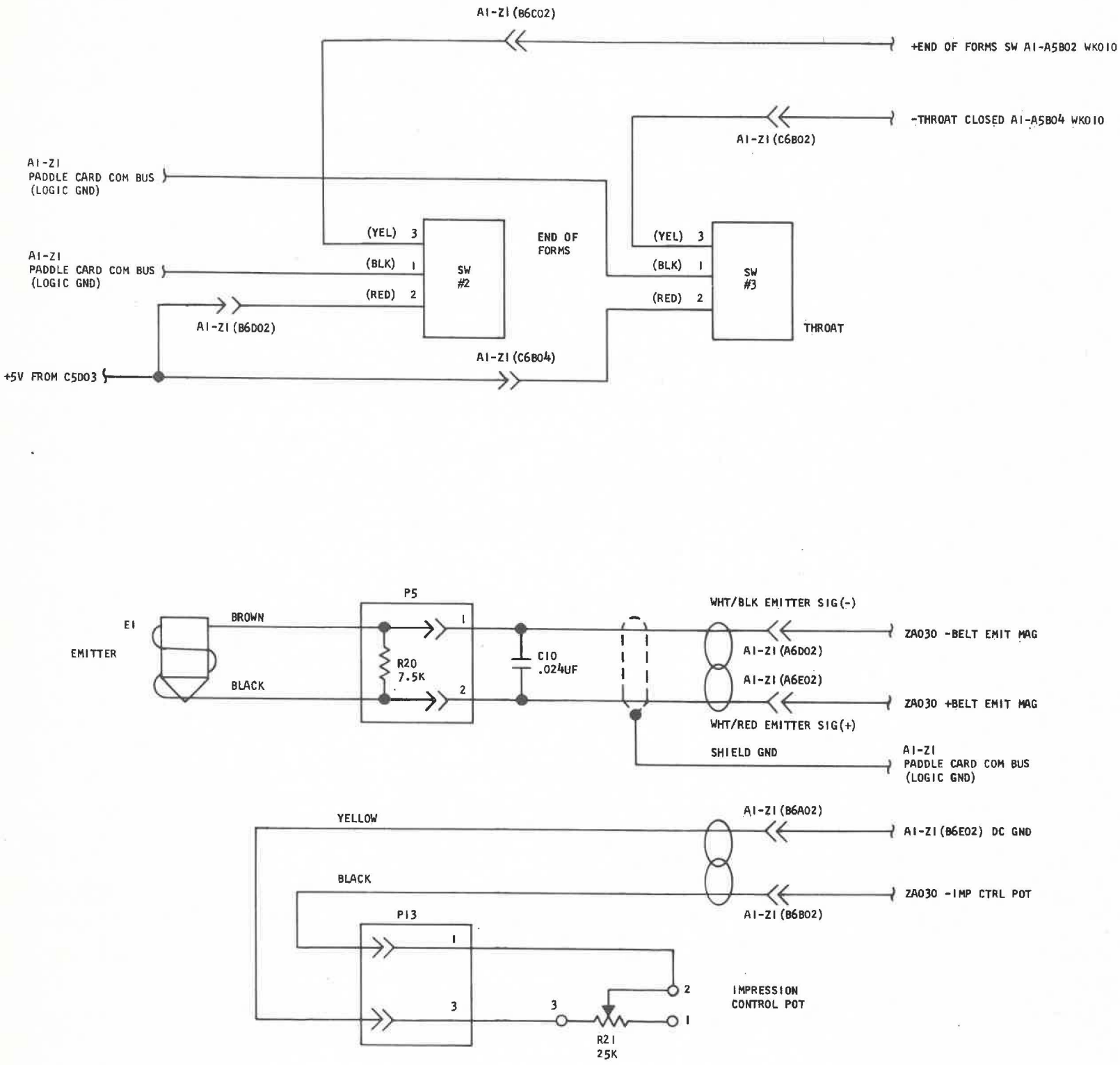

"THIS DOCUMENT IS THE PROPERTY OF IBM, ITS USE IS AUTHORIZED ONLY FOR RESPONDING TO A REQUEST FOR QUOTATION OR FOR THE PERFORMANCE OF WORK FOR IBM. ALL QUESTIONS MUST BE REFERRED TO THE IBM PURCHASING DEPARTMENT."

IBM					DATE	CHANGE NO		DATE	CHANGE NO
NAME	BELT EMIT, IMPRESSION CNTL,				24JAN77	149529U			
	END OF FORMS & THROAT CLOSED, SW				10AUG77	359424			
DESIGN			SHT OF		6DEC77	356703			
DETAIL	L.A.I.	24JAN77	VD FEB77						
CHECK	G.D.B.	2FEB77	CLASSIFICATION	MUST CONFORM TO ENG SPEC	DEVELOPMENT NO		LOGIC PG NO		
APPRO	R.C.H.	9FEB77	1 28FEB77				ZA080		

4703195 C

MRO* 2B0522204 VERTICAL ELECTRICAL FORMAT ASTROCLOTH N650T

C	4703196

PART NO	LOGIC PG NO
4703196	7AC81

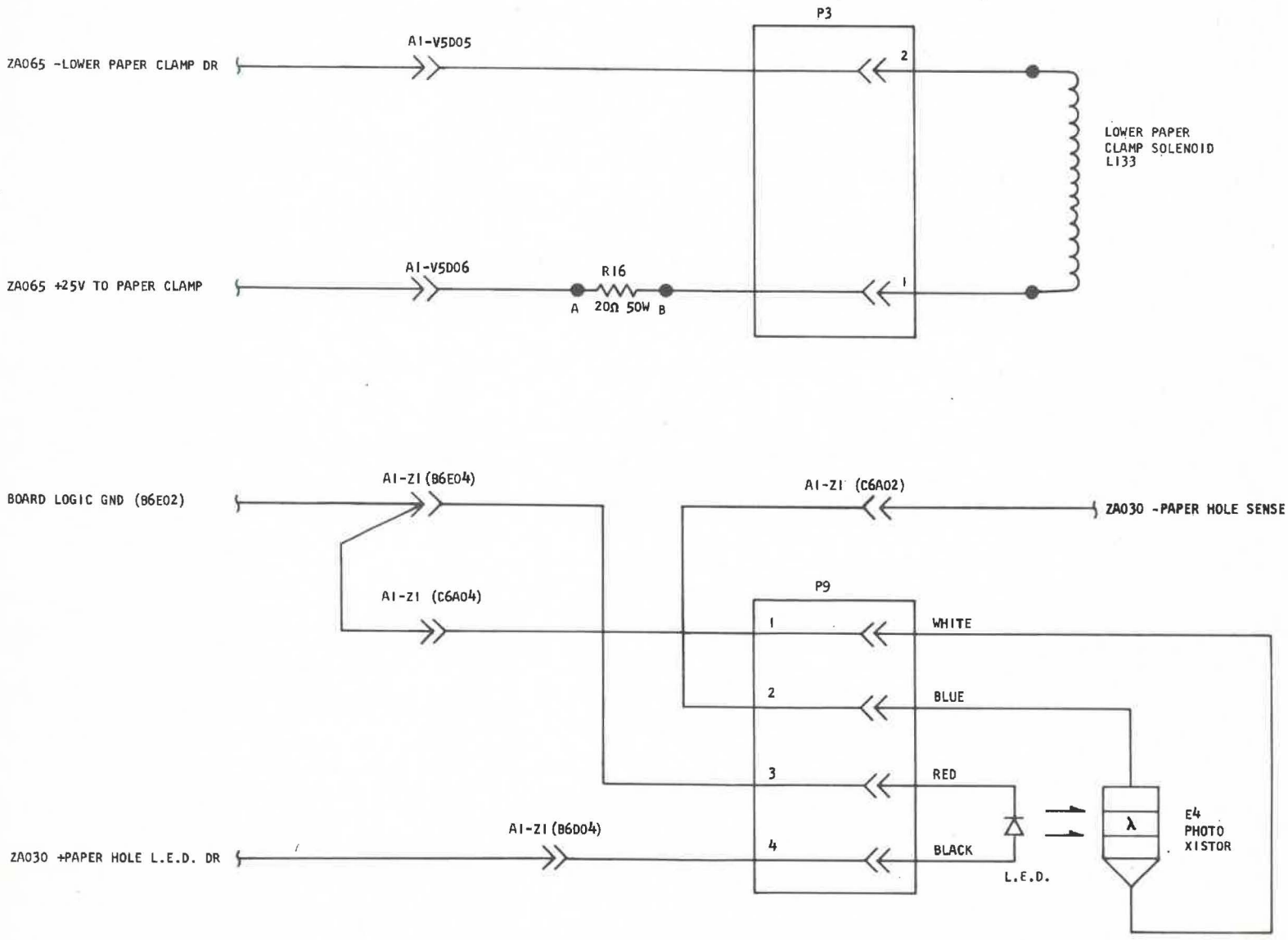

"THIS DOCUMENT IS THE PROPERTY OF IBM, ITS USE IS AUTHORIZED ONLY FOR RESPONDING TO A REQUEST FOR QUOTATION OR FOR THE PERFORMANCE OF WORK FOR IBM, ALL QUESTIONS MUST BE REFERRED TO THE IBM PURCHASING DEPARTMENT.

IBM					DATE	CHANGE NO		DATE	CHANGE NO
NAME	LOWER PAPER CLAMP AND PAPER HOLE SENSE				24JAN77	149529U			
					10AUG77	359424			
DESIGN			SHT OF		6DEC77	356703			
DETAIL	L.A.I.	2FEB77	VD FEB77						
CHECK	G.D.B.	4FEB77	CLASSIFICATION	MUST CONFORM TO ENG SPEC	DEVELOPMENT NO		LOGIC PG NO		
APPRO	R.C.H.	9FEB77	28FEB77				ZA081		

4703196 C

MRO# 780522204 VERTICAL ELECTRICAL FORMAT ASTROCLOTH N680T

C 4703199

MOD II

PART NO 4703199 | LOGIC PG NO ZA100

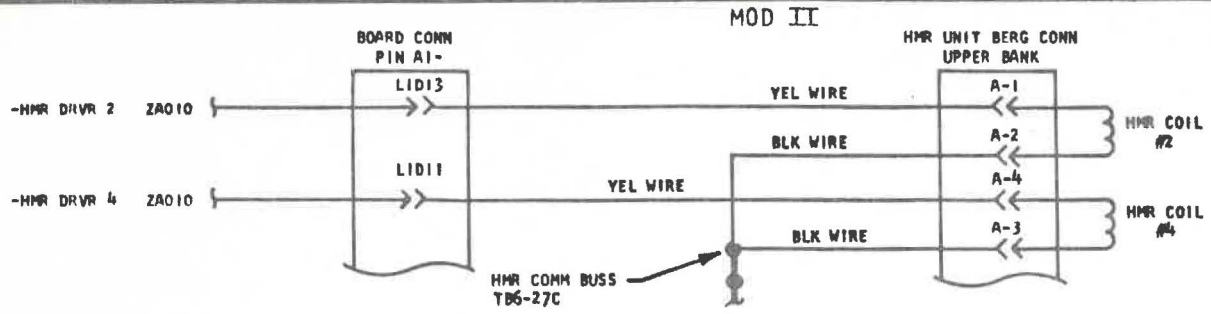

HMR POS NO. AND SOURCE PAGE	BOARD CONN PIN (A-)	HMR UNIT BERG CONN DRIVE	HMR UNIT BERG CONN COMM	HMR COMM BUSS (TB)
2 - ZA010	LIDI3	A-1	A-2	TB6-27C
4 - ZA010	LIDI1	A-4	A-3	
6 - ZA010	LIEI3	A-5	A-6	TB6-27A
8 - ZA010	LIEI1	A-8	A-7	
10 - ZA010	MIAI3	A-9	A-10	TB6-27B
12 - ZA010	MIAI1	A-12	A-11	
14 - ZA010	MIBI3	A-13	A-14	TB6-26C
16 - ZA010	MIBI1	A-16	A-15	
18 - ZA010	MICI3	A-17	A-18	TB6-26A
20 - ZA010	MICI1	A-20	A-19	
22 - ZA010	MIDI3	A-21	A-22	TB6-26B
24 - ZA010	MIDI1	B-2	B-1	
26 - ZA010	NIAI3	B-3	B-4	TB6-25C
28 - ZA010	NIAI1	B-6	B-5	
30 - ZA010	NIBI3	B-7	B-8	TB6-25A
32 - ZA010	NIBI1	B-10	B-9	
34 - ZA010	NICI3	B-11	B-12	TB6-25B
36 - ZA010	NICI1	B-14	B-13	
38 - ZA010	NIDI3	B-15	B-16	TB6-24C
40 - ZA010	NIDI1	B-18	B-17	
42 - ZA010	NIEI3	B-19	B-20	TB6-24A
44 - ZA010	NIEI1	B-22	B-21	
46 - ZA010	PIEI3	C-1	C-2	TB6-24B
48 - ZA010	PIEI1	C-4	C-3	
50 - ZA010	QIAI3	C-5	C-6	TB6-23C
52 - ZA010	QIAI1	C-8	C-7	
54 - ZA010	QIBI3	C-9	C-10	TB6-23A
56 - ZA010	QIBI1	C-12	C-11	
58 - ZA010	QICI3	C-13	C-14	TB6-23B
60 - ZA010	QICI1	C-16	C-15	
62 - ZA010	QIDI3	C-17	C-18	TB6-22C
64 - ZA010	QIDI1	C-20	C-19	
66 - ZA010	QIEI3	C-21	C-22	TB6-22A
68 - ZA010	QIEI1	D-2	D-1	

HMR POS NO. AND SOURCE PAGE	BOARD CONN PIN (A-)	HMR UNIT BERG CONN DRIVE	HMR UNIT BERG CONN COMM	HMR COMM BUSS (TB)
70 - ZA010	RIBI3	D-3	D-4	TB6-22B
72 - ZA010	RIBI1	D-6	D-5	
74 - ZA010	RICI3	D-7	D-8	TB6-21C
76 - ZA010	RICI1	D-10	D-9	
78 - ZA010	RIDI3	D-11	D-12	TB6-21A
80 - ZA010	RIDI1	D-14	D-13	
82 - ZA010	RIEI3	D-15	D-16	TB6-21B
84 - ZA010	RIEI1	D-18	D-17	
86 - ZA010	SIAI3	D-19	D-20	TB6-20C
88 - ZA010	SIAI1	D-22	D-21	
90 - ZA010	TIAI3	E-1	E-2	TB6-20A
92 - ZA010	TIAI1	E-4	E-3	
94 - ZA010	TIBI3	E-5	E-6	TB6-20B
96 - ZA010	TIBI1	E-8	E-7	
98 - ZA010	TICI3	E-9	E-10	TB6-19C
100 - ZA010	TICI1	E-12	E-11	
102 - ZA010	TIDI3	E-13	E-14	TB6-19A
104 - ZA010	TIDI1	E-16	E-15	
106 - ZA010	TIEI3	E-17	E-18	TB6-19B
108 - ZA010	TIEI1	E-20	E-19	
110 - ZA010	UIAI3	E-21	E-22	TB6-18C
112 - ZA010	UIAI1	F-2	F-1	
114 - ZA010	UICI3	F-3	F-4	TB6-18A
116 - ZA010	UICI1	F-6	F-5	
118 - ZA010	UIDI3	F-7	F-8	TB6-18B
120 - ZA010	UIDI1	F-10	F-9	
122 - ZA010	UIEI3	F-11	F-12	TB6-17C
124 - ZA010	UIEI1	F-14	F-13	
126 - ZA010	VIAI3	F-15	F-16	TB6-17A
128 - ZA010	VIAI1	F-18	F-17	
130 - ZA010	VIBI3	F-19	F-20	TB6-17B
132 - ZA010	VIBI1	F-22	F-21	

HAMMER UNIT BERG CONN LAYOUT (AS VIEWED FROM BACK OF THE MACHINE)

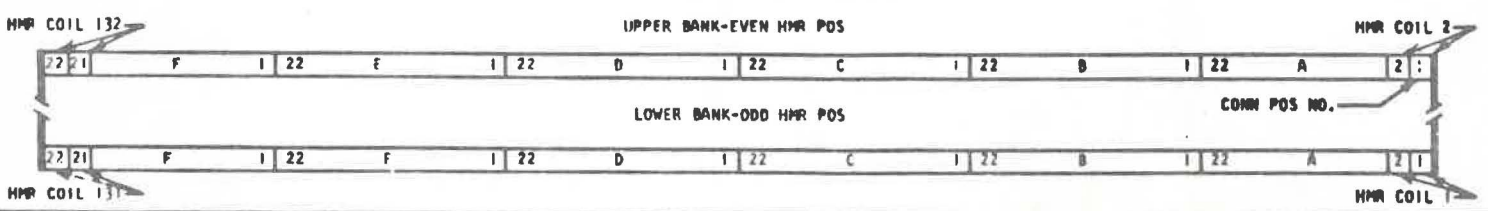

HMR COMM BUSS TB6 (AS VIEWED FROM BACK OF THE MACHINE)

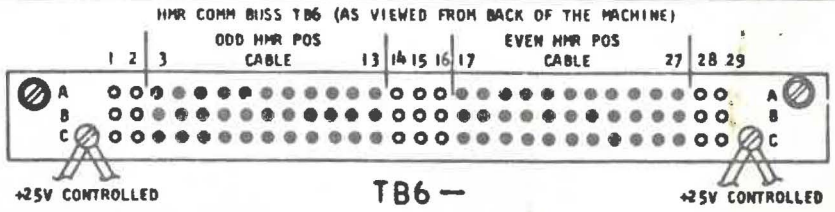

"THIS DOCUMENT IS THE PROPERTY OF IBM. ITS USE IS AUTHORIZED ONLY FOR RESPONDING TO A REQUEST FOR QUOTATION OR FOR THE PERFORMANCE OF WORK FOR IBM. ALL QUESTIONS MUST BE REFERRED TO THE IBM PURCHASING DEPARTMENT"

					DATE	CHANGE NO		DATE	CHANGE NO
NAME	HMR COILS EVEN POSITIONS MOD II				24JAN77	149529U			
					6DEC77	356703			
DESIGN			SHT OF						
DETAIL	L.A.I.	20JAN77	VD FEB77						
CHECK	G.D.B.	22JAN77	CLASSIFICATION		MUST CONFORM TO ENG SPEC	DEVELOPMENT NO		LOGIC PG NO	
APPRO	R.C.H.	9FEB77	RGL	28FEB77				ZA100	

4703199 C

680 0130 1 IBM® 7000 SERIES VERTICAL ELECTRICAL FORMAT ASTROCLOTH 10001

C

4703200

MOD II

PART NO 4703200

LOGIC PG NO ZA110

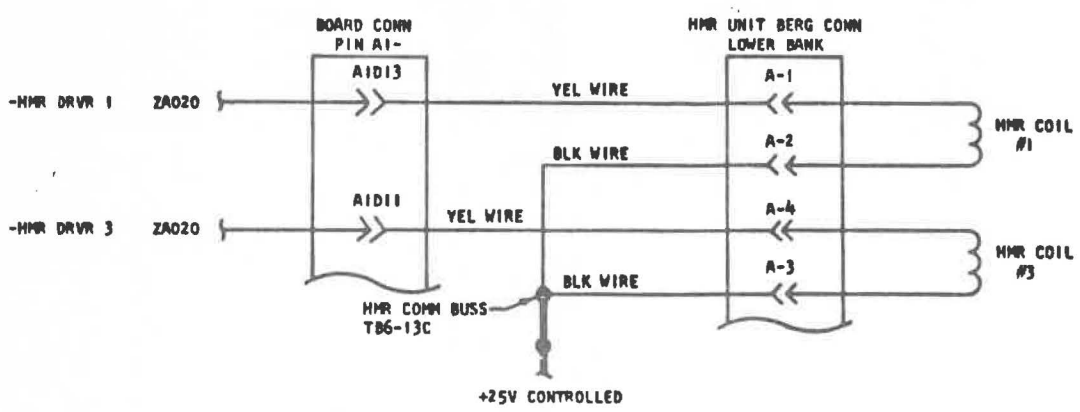

HMR POS NO. AND SOURCE PAGE	BOARD CONN PIN (A1-)	HMR UNIT BERG CONN DRIVE	HMR UNIT BERG CONN COMM	HMR COMM BUSS (TB)
1 - ZA020	A1D13	A-1	A-2	TB6-13C
3 - ZA020	A1D11	A-4	A-3	
5 - ZA020	A1E13	A-5	A-6	TB6-13A
7 - ZA020	A1E11	A-8	A-7	
9 - ZA020	B1A13	A-9	A-10	TB6-13B
11 - ZA020	B1A11	A-12	A-11	
13 - ZA020	B1B13	A-13	A-14	TB6-12C
15 - ZA020	B1B11	A-16	A-15	
17 - ZA020	B1C13	A-17	A-18	TB6-12A
19 - ZA020	B1C11	A-20	A-19	
21 - ZA020	B1D13	A-21	A-22	TB6-12B
23 - ZA020	B1D11	B-2	B-1	
25 - ZA020	C1A13	B-3	B-4	TB6-11C
27 - ZA020	C1A11	B-6	B-5	
29 - ZA020	C1B13	B-7	B-8	TB6-11A
31 - ZA020	C1B11	B-10	B-9	
33 - ZA020	C1C13	B-11	B-12	TB6-11B
35 - ZA020	C1C11	B-14	B-13	
37 - ZA020	C1D13	B-15	B-16	TB6-10C
39 - ZA020	C1D11	B-18	B-17	
41 - ZA020	C1E13	B-19	B-20	TB6-10A
43 - ZA020	C1E11	B-22	B-21	
45 - ZA020	D1E13	C-1	C-2	TB6-10B
47 - ZA020	D1E11	C-4	C-3	
49 - ZA020	E1A13	C-5	C-6	TB6-9C
51 - ZA020	E1A11	C-8	C-7	
53 - ZA020	E1B13	C-9	C-10	TB6-9A
55 - ZA020	E1B11	C-12	C-11	
57 - ZA020	E1C13	C-13	C-14	TB6-9B
59 - ZA020	E1C11	C-16	C-15	
61 - ZA020	E1D13	C-17	C-18	TB6-8C
63 - ZA020	E1D11	C-20	C-19	
65 - ZA020	E1E13	C-21	C-22	TB6-8A
67 - ZA020	E1E11	D-2	D-1	

HMR POS NO. AND SOURCE PAGE	BOARD CONN PIN (A1-)	HMR UNIT BERG CONN DRIVE	HMR UNIT BERG CONN COMM	HMR COMM BUSS (TB)
69 - ZA020	F1B13	D-3	D-4	TB6-8B
71 - ZA020	F1B11	D-6	D-5	
73 - ZA020	F1C13	D-7	D-8	TB6-7C
75 - ZA020	F1C11	D-10	D-9	
77 - ZA020	F1D13	D-11	D-12	TB6-7A
79 - ZA020	F1D11	D-14	D-13	
81 - ZA020	F1E13	D-15	D-16	TB6-7B
83 - ZA020	F1E11	D-18	D-17	
85 - ZA020	G1A13	D-19	D-20	TB6-6C
87 - ZA020	G1A11	D-22	D-21	
89 - ZA020	H1A13	E-1	E-2	TB6-6A
91 - ZA020	H1A11	E-4	E-3	
93 - ZA020	H1B13	E-5	E-6	TB6-6B
95 - ZA020	H1B11	E-8	E-7	
97 - ZA020	H1C13	E-9	E-10	TB6-5C
99 - ZA020	H1C11	E-12	E-11	
101 - ZA020	H1D13	E-13	E-14	TB6-5A
103 - ZA020	H1D11	E-16	E-15	
105 - ZA020	H1E13	E-17	E-18	TB6-5B
107 - ZA020	H1E11	E-20	E-19	
109 - ZA020	J1A13	E-21	E-22	TB6-4C
111 - ZA020	J1A11	F-2	F-1	
113 - ZA020	J1C13	F-3	F-4	TB6-4A
115 - ZA020	J1C11	F-6	F-5	
117 - ZA020	J1D13	F-7	F-8	TB6-4B
119 - ZA020	J1D11	F-10	F-9	
121 - ZA020	J1E13	F-11	F-12	TB6-3C
123 - ZA020	J1E11	F-14	F-13	
125 - ZA020	K1A13	F-15	F-16	TB6-3A
127 - ZA020	K1A11	F-18	F-17	
129 - ZA020	K1B13	F-19	F-20	TB6-3B
131 - ZA020	K1B11	F-22	F-21	

"THIS DOCUMENT IS THE PROPERTY OF IBM. ITS USE IS AUTHORIZED ONLY FOR RESPONDING TO A REQUEST FOR QUOTATION OR FOR THE PERFORMANCE OF WORK FOR IBM. ALL QUESTIONS MUST BE REFERRED TO THE IBM PURCHASING DEPARTMENT"

IBM					DATE	CHANGE NO		DATE	CHANGE NO
NAME	HMR COILS ODD POSITIONS MOD II				24JAN77	1495290			
					6DEC77	356703			
DESIGN			SHT OF						
DETAIL	L.A.I.	20JAN77	VD FEB77						
CHECK	G.D.B.	22JAN77	CLASSIFICATION	MUST CONFORM TO ENG SPEC	DEVELOPMENT NO		LOGIC PG NO		
APPRO	R.C.H.	9FEB77	28FEB77				ZA110		

4703200 C

630 0134 1 IMAGE 7800822804 VERTICAL ELECTRICAL FORMAT ASTROGLOTH 00007

4703202 C

MOD II

PART NO 4703202 | LOGIC PG NO ZA120

ZA010 -HMR DRVR	2	G02	ECHO CHECK CARD
ZA010 -HMR DRVR	4	J02	
ZA010 -HMR DRVR	6	G03	
ZA010 -HMR DRVR	8	G04	
ZA010 -HMR DRVR	10	J04	
ZA010 -HMR DRVR	12	G05	
ZA010 -HMR DRVR	14	J05	
ZA010 -HMR DRVR	16	G06	
ZA010 -HMR DRVR	18	J06	
ZA010 -HMR DRVR	20	G07	
ZA010 -HMR DRVR	22	J07	
ZA010 -HMR DRVR	24	G08	
ZA010 -HMR DRVR	26	G09	
ZA010 -HMR DRVR	28	J09	
ZA010 -HMR DRVR	30	G10	
ZA010 -HMR DRVR	32	J10	
ZA010 -HMR DRVR	34	G11	
ZA010 -HMR DRVR	36	J11	
ZA010 -HMR DRVR	38	G12	
ZA010 -HMR DRVR	40	J12	
ZA010 -HMR DRVR	42	G13	
ZA010 -HMR DRVR	44	J13	
ZA010 -HMR DRVR	46	M02	
ZA010 -HMR DRVR	48	P02	
ZA010 -HMR DRVR	50	M03	
ZA010 -HMR DRVR	52	M04	
ZA010 -HMR DRVR	54	P04	
ZA010 -HMR DRVR	56	M05	
ZA010 -HMR DRVR	58	P05	
ZA010 -HMR DRVR	60	M06	
ZA010 -HMR DRVR	62	P06	
ZA010 -HMR DRVR	64	M07	
ZA010 -HMR DRVR	66	P07	
ZA010 -HMR DRVR	68	M08	
ZA010 -HMR DRVR	70	M09	D06 ——— ZA030 +HAMMER ECHO RTN
ZA010 -HMR DRVR	72	P09	
ZA010 -HMR DRVR	74	M10	
ZA010 -HMR DRVR	76	P10	
ZA010 -HMR DRVR	78	M11	
ZA010 -HMR DRVR	80	P11	
ZA010 -HMR DRVR	82	M12	
ZA010 -HMR DRVR	84	P12	
ZA010 -HMR DRVR	86	M13	
ZA010 -HMR DRVR	88	P13	
ZA010 -HMR DRVR	90	S02	
ZA010 -HMR DRVR	92	U02	
ZA010 -HMR DRVR	94	S03	
ZA010 -HMR DRVR	96	S04	
ZA010 -HMR DRVR	98	U04	
ZA010 -HMR DRVR	100	S05	
ZA010 -HMR DRVR	102	U05	
ZA010 -HMR DRVR	104	S06	
ZA010 -HMR DRVR	106	U06	
ZA010 -HMR DRVR	108	S07	
ZA010 -HMR DRVR	110	U07	
ZA010 -HMR DRVR	112	S08	
ZA010 -HMR DRVR	114	S09	
ZA010 -HMR DRVR	116	U09	
ZA010 -HMR DRVR	118	S10	
ZA010 -HMR DRVR	120	U10	
ZA010 -HMR DRVR	122	S11	
ZA010 -HMR DRVR	124	U11	
ZA010 -HMR DRVR	126	S12	
ZA010 -HMR DRVR	128	U12	B06 ——— -OUT GRP 2-46 (T.P.)
ZA010 -HMR DRVR	130	S13	B07 ——— -OUT GRP 48-94 (T.P.)
ZA010 -HMR DRVR	132	U13	B09 ——— -OUT GRP 96-132 (T.P.)
WK010 +POR		B02	B10 ——— -OUT GRP 95-131 (T.P.)
ZA040 +CLOSE CONTACTOR		B03	B11 ——— -OUT GRP 47-93 (T.P.)
ZA010 +NOT PRINT TIME CHECK		B13	B12 ——— -OUT GRP 1-45 (T.P.)
ZA035 +D1		D02	
ZA035 +D3		D04	
ZA035 +INITIATE SMPLE RING RESET		D07	
ZA030 +HAMMER SAMPLE		D09	

A1-M2

CONTINUED ON ZA130 →

"THIS DOCUMENT IS THE PROPERTY OF IBM. ITS USE IS AUTHORIZED ONLY FOR RESPONDING TO A REQUEST FOR QUOTATION OR FOR THE PERFORMANCE OF WORK FOR IBM. ALL QUESTIONS MUST BE REFERRED TO THE IBM PURCHASING DEPARTMENT

IBM						DATE	CHANGE NO		DATE	CHANGE NO
NAME	ECHO CHECK EVEN POSITIONS MOD II				24JAN77	1495290			
					6DEC77	356703			
DESIGN			SHT OF						
DETAIL	L.A.I.	2FEB77	VD FEB77						
CHECK	G.D.B.	4FEB77	CLASSIFICATION	MUST CONFORM TO ENG SPEC	DEVELOPMENT NO	LOGIC PG NO			
APPRO	R.C.N.	9FEB77	28FEB77			ZA120			

4703202 C

820 0136-1 MADE 7806221 04 VERTICAL ELECTRICAL FORMAT ASTROCLOTH MYLAR

4703203 C

MOD II

PART NO	LOGIC PG NO
4703203	ZA130

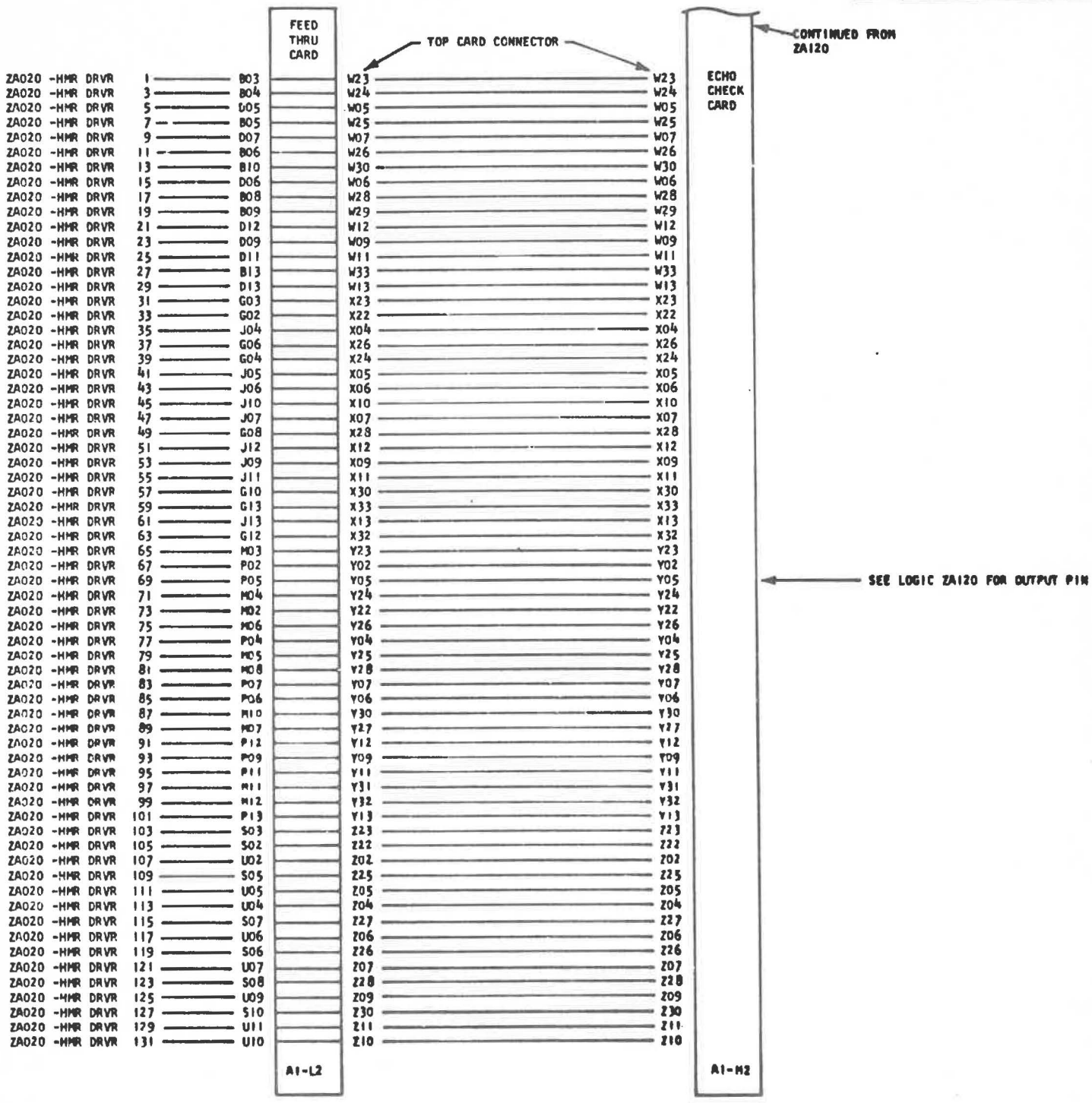

"THIS DOCUMENT IS THE PROPERTY OF IBM. ITS USE IS AUTHORIZED ONLY FOR RESPONDING TO A REQUEST FOR QUOTATION OR FOR THE PERFORMANCE OF WORK FOR IBM. ALL QUESTIONS MUST BE REFERRED TO THE IBM PURCHASING DEPARTMENT

IBM					DATE	CHANGE NO		DATE	CHANGE NO	4703203 C
NAME	ECHO CHECK ODD POSITIONS MOD II				24JAN77	1495290				
					6DEC77	356703				
DESIGN			SHT OF							
DETAIL	L.A.I.	2FEB77	VD FEB77							
CHECK	G.D.B.	4FEB77	CLASSIFICATION	MUST CONFORM TO ENG SPEC		DEVELOPMENT NO		LOGIC PG NO		
APPRO	R.C.H.	9FEB77						ZA130		

820 0134 1 MROS 7L0888206 VERTICAL ELECTRICAL FORMAT ASTROCLOTH MOSBY

PART NO 4703229 | LOGIC PG NO ZZ010

5211 MOD I - II

COMPONENT	PART NUMBER	DESCRIPTION	FUNCTION	LOGIC PAGE
C1, C2	5252809	8UF	CARRIAGE MOTOR	ZA070
C5, C6	5252810	10 UF	BELT MOTOR	ZA071
C7	5252740	100K UF	FILTER CAP	ZZ020
C10	217046	.024 UF	EMITTER	ZA080
D1	369649	ZENER DIODE	+24V CLAMP	ZZ020
D2	615354	DIODE ASM-AM	SUPPRESSION DIODE	ZZ020
E1	1803793	TRANSDUCER	PRINT EMITTER (PSS)	ZA080
E2	6808527	LED/PT ASSEMBLY	BELT EMITTER	ZA082
E3	6808527	LED/PT ASSEMBLY	CARRIAGE EMITTER	ZA082
E4	1812301	LED/PT ASSEMBLY	PAPER MOTION SENSE	ZA081
K1	2410111	RELAY	+25V CONTROLLED	ZZ020
L1-66	1800796	HAMMER COIL	HAMMER ACTUATE MOD I	ZA100
L1-132	1800796	HAMMER COIL	HAMMER ACTUATE MOD II	ZA100-ZA110
L133	1812547	COIL MAGNET	PAPER CLAMP	ZA081
M1	4703237	DC MOTOR	CARRIAGE DRIVE	ZA070
M2	4138363	DC MOTOR	RIGHT RIBBON DRIVE	ZA070
M3	1816039	DC MOTOR	BELT DRIVE	ZA071
M4	4138363	DC MOTOR	LEFT RIBBON DRIVE	ZA071
M5	4703240	AC MOTOR (200V)	FAN 50/60HZ	YF001
M5	4703241	AC MOTOR(208-240V)	FAN 50/60HZ	YF001
P1, P2, P4, P6		9 POS CONN	CARR, RIGHT AND LEFT RIBBON, BELT MOTORS	ZA070-ZA071
P3, P5		2 POS CONN	PAPER CLAMP, BELT EMITTER	ZA081-ZA080
P7		3 POS CONN	LOGIC GATE FAN	YF001
P8		16 POS CONN	OPERATOR PANEL	ZA002
P9		4 POS CONN	PAPER HOLE SENSE	ZA081
P13		3 POS CONN	IMPRESSION CONTROL POT	ZA080

"THIS DOCUMENT IS THE PROPERTY OF IBM, ITS USE IS AUTHORIZED ONLY FOR RESPONDING TO A REQUEST FOR QUOTATION OR FOR THE PERFORMANCE OF WORK FOR IBM. ALL QUESTIONS MUST BE REFERRED TO THE IBM PURCHASING DEPARTMENT.

IBM										
NAME	COMPONENT LISTING					DATE	CHANGE NO		DATE	CHANGE NO
						27JUN77	359424			
						6DEC77	356703			
DESIGN			SHT 1 OF 1			7FEB78	359422			
DETAIL	GDB	2MAY77	VD MAY77							
CHECK	LAI	6MAY77	CLASSIFICATION		MUST CONFORM TO ENG SPEC		DEVELOPMENT NO		LOGIC PG NO	
APPRO	RCH	6MAY77	RCH	12JUL77					ZZ010	

4703229 C

5211 MOD I - II

COMPONENT	PART NUMBER	DESCRIPTION	FUNCTION	LOGIC PAGE
R1, R2, R3, R4	639292	100Ω 10W	RIGHT, LEFT RIBBON MOTOR	ZA070-ZA071
R5, R6	5615879	4Ω 50W	BELT MOTOR	ZA071
R7, R8, R9, R10	5615309	7Ω 50W	RIGHT, LEFT RIBBON MOTOR	ZA070-ZA071
R11, R12	5615311	15Ω 50W	CARRIAGE MOTOR	ZA070
R13	507142	100Ω 25W	+25V NOISE SUPPRESSION	ZZ020
R14, R15	5615309	7Ω 50W	CARRIAGE MOTOR	ZA070
R16	5615592	20Ω 50W	LOWER PAPER CLAMP	ZA081
R20	216465	7.5K 1/4W	BELT EMITTER NOISE SUPPRESSION	ZA080
R21	1810970	25K	IMPRESSION CONTROL POT	ZA080
SW1	363420	SWITCH	POWER ON/OFF	YF00L
SW2	1589401	SWITCH	END OF FORMS	ZA080
SW3	5616034	SWITCH	THROAT INTLK	ZA080
SW4, SW5	5576617	SWITCH	RIGHT, LEFT RIBBON REV	ZA070-ZA071
SW6	738826	SWITCH	6/8 L.P.I	ZA002
SW C.E.	738827	SWITCH	CE BELT, CARR, RIBBON, PAPER CLAMP	ZA001
SW7	5593438	SWITCH ASSEMBLY	OPERATOR PANEL	ZA002
TB1		20 POS	DC POWER (LOGIC GATE)	ZZ020
TB2, TB3		8 POS	RIBBON MOTOR (POWER PLATE)	ZA070-ZA071, ZZ02
TB4		8 POS	BELT EMITTER (BELT LED)	ZA082
TB5		8 POS	CARRIAGE EMITTER (CARR LED)	ZA082
TB6		29 POS	HAMMER RETURN (REAR OF HMR UNIT)	ZA100
	5593440	PCB-OP	LED COMPONENT BOARD OPERATOR PANEL	ZA002

50/60 HZ POWER SUPPLY ASSEMBLY - LEVEL III

PART NUMBER	DESCRIPTION
5593470	POWER SUPPLY ASM 50/60 HZ

NOTE: SEE WIRING DIAGRAM PART NUMBER 5593471 FOR COMPLETE LISTING OF POWER SUPPLY COMPONENT PART NUMBERS.

	1862655	FILTER	AC LINE FILTER	YF00L
(PS)P1		4 POS CONN	AC POWER TO FERRO TRANSFORMER	YF00L
(PS)P4		3 POS CONN	AC POWER TO LOGIC GATE FAN	YF00L
(PS)P20		15 POS CONN	AC POWER FERRO TO CONTROL BOARD	YF00L
(PS)P23		12 POS CONN	+25V DC OUTPUT	YF00L
(PS)P25		6 POS CONN	+5V DC AND +8.5VDC OUTPUT	YF00L
(PS)P26		3 POS CONN	+24 V AC TO CONTROL BOARD	YF00L
(PS)P27		10 POS CONN	P.S. SIGNAL	YF00L

"THIS DOCUMENT IS THE PROPERTY OF IBM. ITS USE IS AUTHORIZED ONLY FOR RESPONDING TO A REQUEST FOR QUOTATION OR FOR THE PERFORMANCE OF WORK FOR IBM. ALL QUESTIONS MUST BE REFERRED TO THE IBM PURCHASING DEPARTMENT.

NAME	COMPONENT LISTING					27JUN77	359424			
						6DEC77	356703			
DESIGN			SHT 1 OF 1			17 JAN 78	155919			
DETAIL	GDB	2MAY77	VD MAY77							
CHECK	LAI	6MAY77	CLASSIFICATION		MUST CONFORM TO ENG SPEC		DEVELOPMENT NO		LOGIC PG NO	
APPRO	RCH	6MAY77	RCH	12JUL77					ZZ011	

4703230 C

4703205 C

PART NO	LOGIC PG NO
4703205	ZZ020

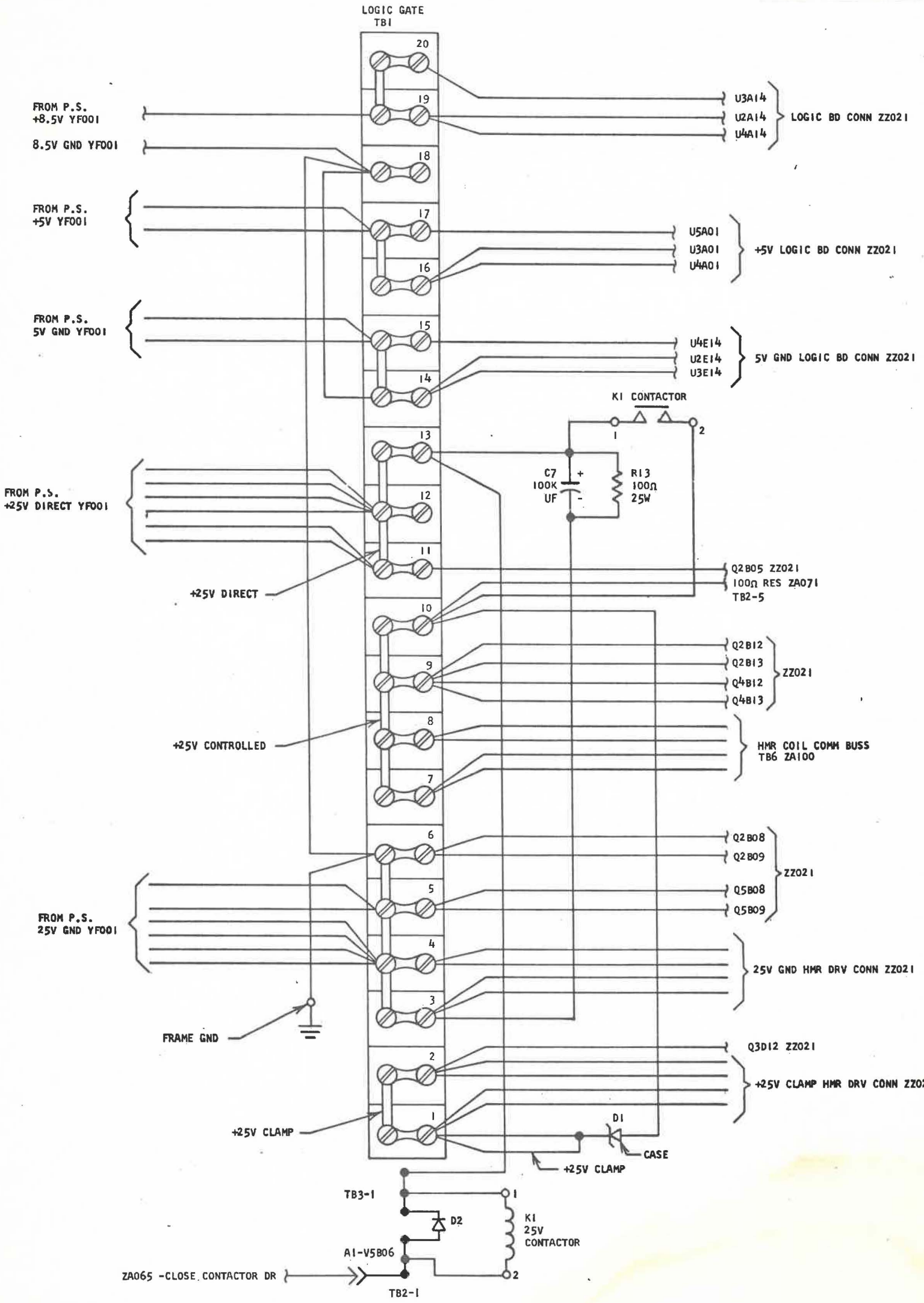

"THIS DOCUMENT IS THE PROPERTY OF IBM, ITS USE IS AUTHORIZED ONLY FOR RESPONDING TO A REQUEST FOR QUOTATION OR FOR THE PERFORMANCE OF WORK FOR IBM. ALL QUESTIONS MUST BE REFERRED TO THE IBM PURCHASING DEPARTMENT.

IBM									
NAME	LOGIC GATE TB1					DATE	CHANGE NO		DATE	CHANGE NO
						24JAN77	149529U			
						10AUG77	359424			
DESIGN			SHT OF			6DEC77	356703			
DETAIL	L.A.I.	3FEB77	VD FEB77			7FEB78	359422			
CHECK	G.D.B.	7FEB77	CLASSIFICATION		MUST CONFORM TO ENG SPEC		DEVELOPMENT NO		LOGIC PG NO	
APPRO	R.C.H.	9FEB77	RCH	28FEB77					ZZ020	

4703205 C

620-0134-1 MRO# 780922204 VERTICAL ELECTRICAL FORMAT ASTROCLOTH N0807

4703206 C

PART NO 4703206 | TECHNOLOGY NO 77021

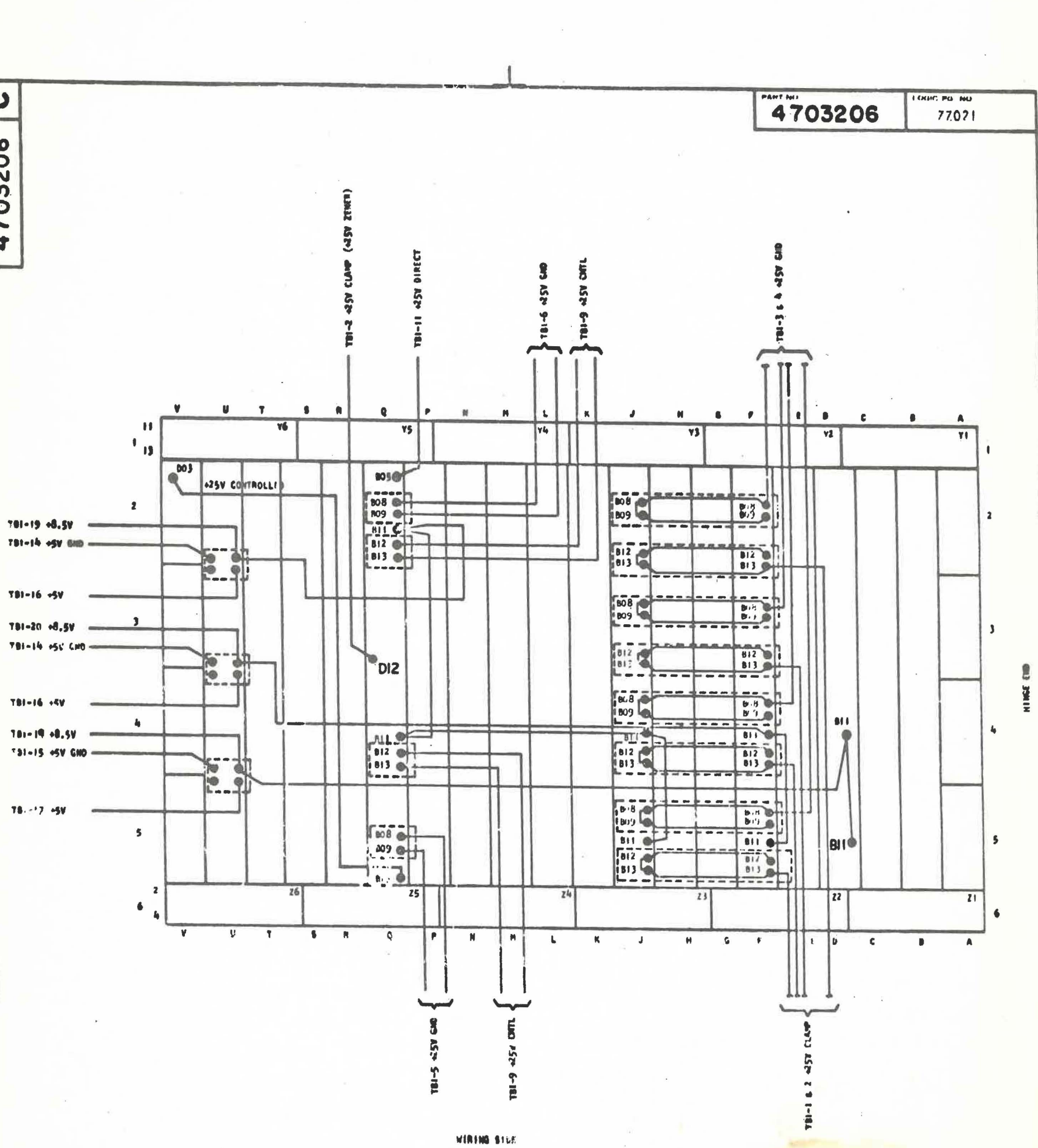

THIS DOCUMENT IS THE PROPERTY OF IBM. ITS USE IS AUTHORIZED ONLY FOR RESPONDING TO A REQUEST FOR QUOTATION OR FOR THE PERFORMANCE OF WORK FOR IBM. ALL QUESTIONS MUST BE REFERRED TO THE IBM PURCHASING DEPARTMENT.

IBM					DATE	CHANGE NO		DATE	CHANGE NO
NAME	GATE VOLTAGE DISTRIBUTION				22JAN77	1495290			
					6DEC77	356703			
DESIGN			SHT 1 OF 1		18APR78	784041			
DETAIL	L.A.I.	26JAN77	VC FEB77						
CHECK	G.D.B.	7FEB77	CLASSIFICATION	MUST CONFORM TO ENG SPEC	DEVELOPMENT NO		LOGIC PG NO		
APPRO	R. M.	9FEB77	RCH 28				11 21		

4703206 C

4703208 C

MOD II

PART NO 4703208 | LOGIC PG NO ZZ025

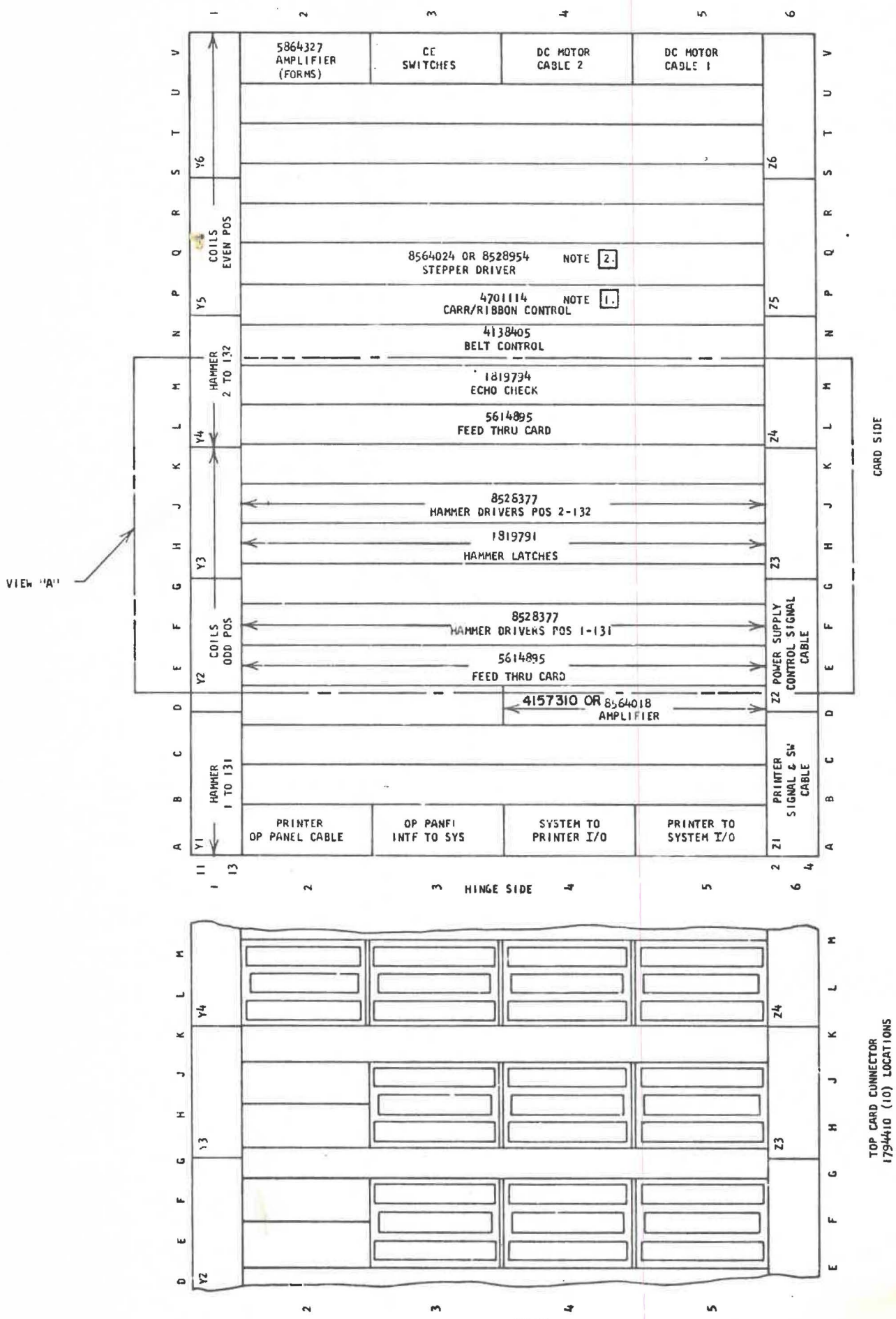

NOTES

1. SOME PRINTERS HAVE PART NUMBER 4701110 INSTALLED. IF REPLACEMENT IS NECESSARY ORDER PART NUMBER 4701114
2. PRINTERS WITH PART NUMBER 8528944 INSTALLED, ORDER PART NUMBER 8564024 FOR REPLACEMENT, IF D2 DIODE IS INSTALLED AND +8.5V IS WIRED TO Q2B11 AND Q4B11. REF. LOGICS ZZ020 AND ZZ021

"THIS DOCUMENT IS THE PROPERTY OF IBM. ITS USE IS AUTHORIZED ONLY FOR RESPONDING TO A REQUEST FOR QUOTATION OR FOR THE PERFORMANCE OF WORK FOR IBM. ALL QUESTIONS MUST BE REFERRED TO THE IBM PURCHASING DEPARTMENT.

IBM						DATE	CHANGE NO		DATE	CHANGE NO
NAME	CARD LOCATION CHART MOD II					24JAN77	1495290		18APR78	784041
						10AUG77	359424		8AUG78	784049
DESIGN			SHT OF			6DEC77	356703		8DEC78	784101
DETAIL	L.A.I.	25JAN77	VD FEB77			7FEB78	359422		14 FEB 79	357779
CHECK	G.D.B.	7FEB77	CLASSIFICATION			MUST CONFORM TO ENG SPEC	DEVELOPMENT NO		LOGIC PG NO	
APPRO	R.C.H.	9FEB77	RCH	28FEB77					ZZ025	

4703208 C

620 0134 1 MNOE 780822204 VERTICAL ELECTRICAL FORMAT ASTRODATA ASSOC

SECTION 19: FUNCTION WIRING AND TIMING DIAGRAMS

SECTION CONTENTS

•This section contains the following 5211 Printer Function Wiring and Timing Diagrams:

PAGE	PART NUMBER	TITLE
19-010	8324058	Belt Motor Control Diagram
19-015	8324059	Belt Motor Control Timing
19-020	8324060	Print Subscan (PSS) Timing
19-025	8324061	Belt Motor Control Logic
19-030	8324062	Carriage Motor Control Diagram
19-035	8324063	Carriage Motor Control Timing (6/LPI)
19-040	8324064	Carriage Motor Control Logic
19-045	8324065	Carriage Motor Stop Logic
19-050	8324066	Ribbon Motor Control Diagram
19-055	8324067	Ribbon Motor Control Timing
19-060	8324068	Ribbon Motor Control Logic
19-065	8324069	Hammer Control Diagram (Model–1)
19-070	8324070	Hammer Control Diagram (Model–2)
19-075	8324071	Hammer Control Timing
19-080	8324072	Hammer Control Logic

THIS PAGE INTENTIONALLY LEFT BLANK

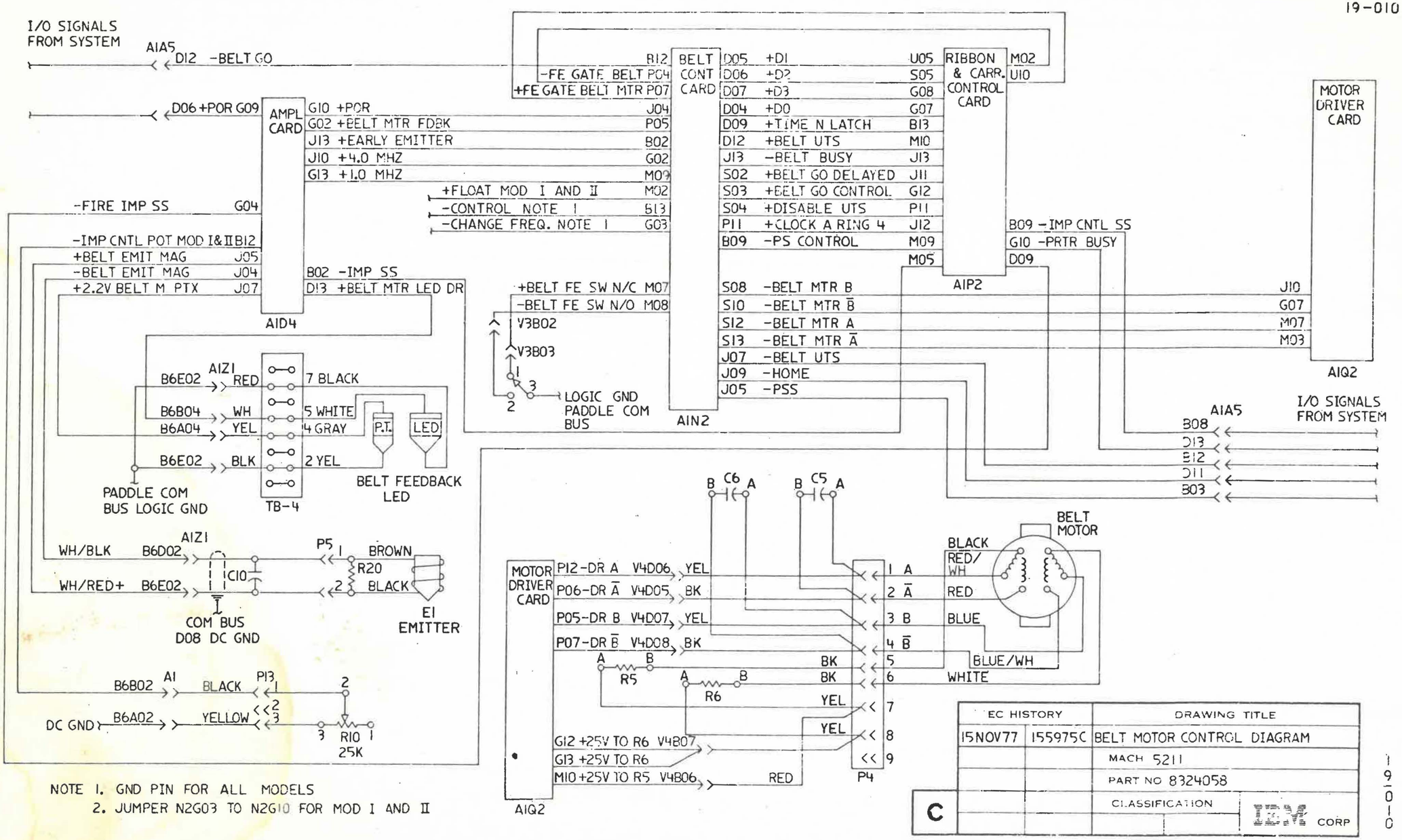

NOTE 1. GND PIN FOR ALL MODELS
2. JUMPER N2G03 TO N2G10 FOR MOD I AND II

EC HISTORY		DRAWING TITLE
15NOV77	155975C	BELT MOTOR CONTROL DIAGRAM
		MACH 5211
		PART NO 8324058
		CLASSIFICATION

C

IBM CORP

BELT MOTOR CONTROL TIMING

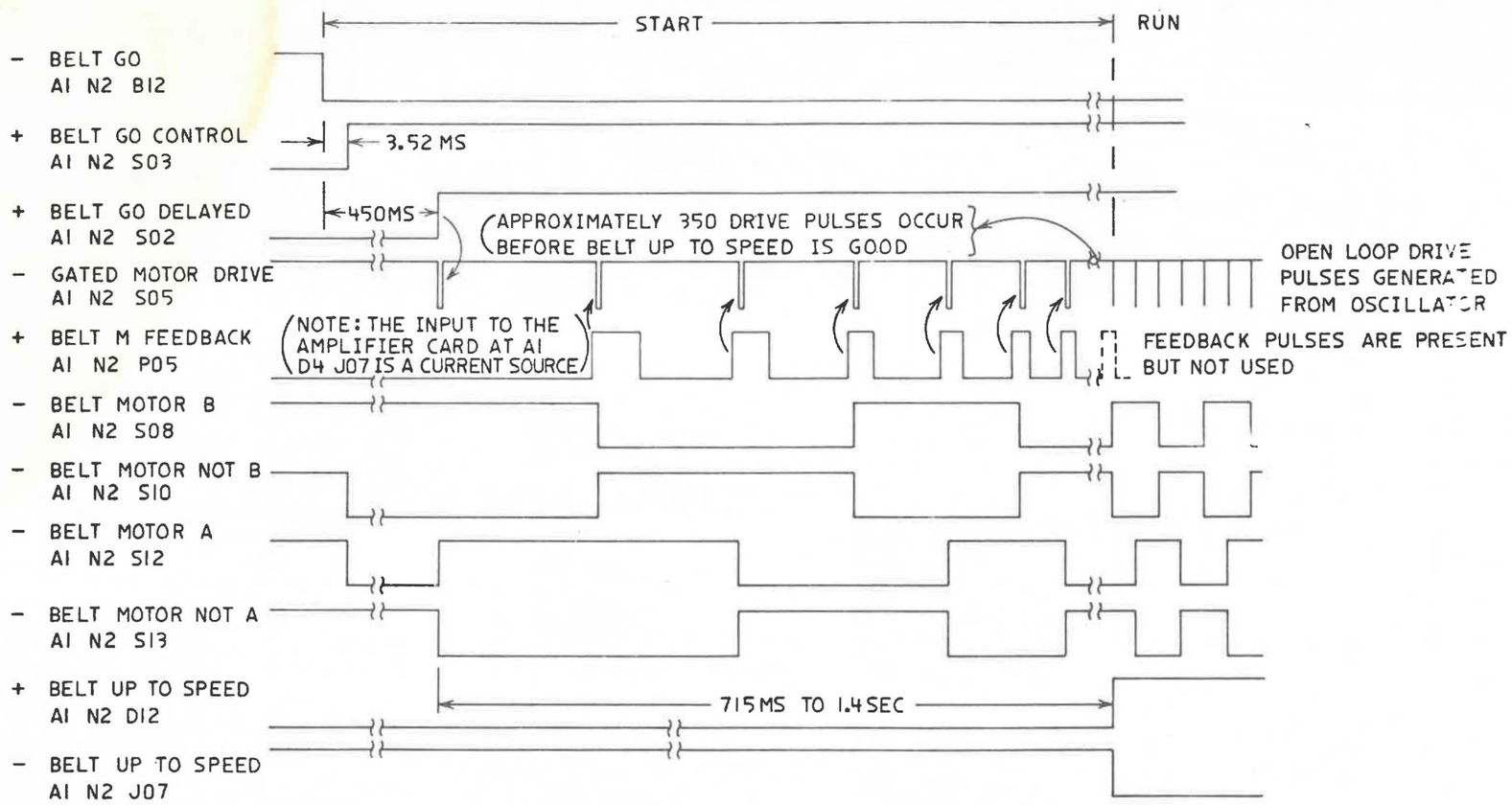

EC HISTORY		DRAWING TITLE
15NOV77	155975C	BELT MOTOR CONTROL TIMING
		MACH 5211
		PART NO 8234059
		CLASSIFICATION

C

IBM CORP

19-015

19-015

620-0131-1 MROZ 780822 ALD DRAWING FORMAT ASTROCLOTH N6501 9730 ABCDE
DRAFTING MEDIA GRAPHIC CONTROLS CORPORATION Buffalo New York Printed in U.S.A.

PRINT SUBSCAN (PSS) TIMING

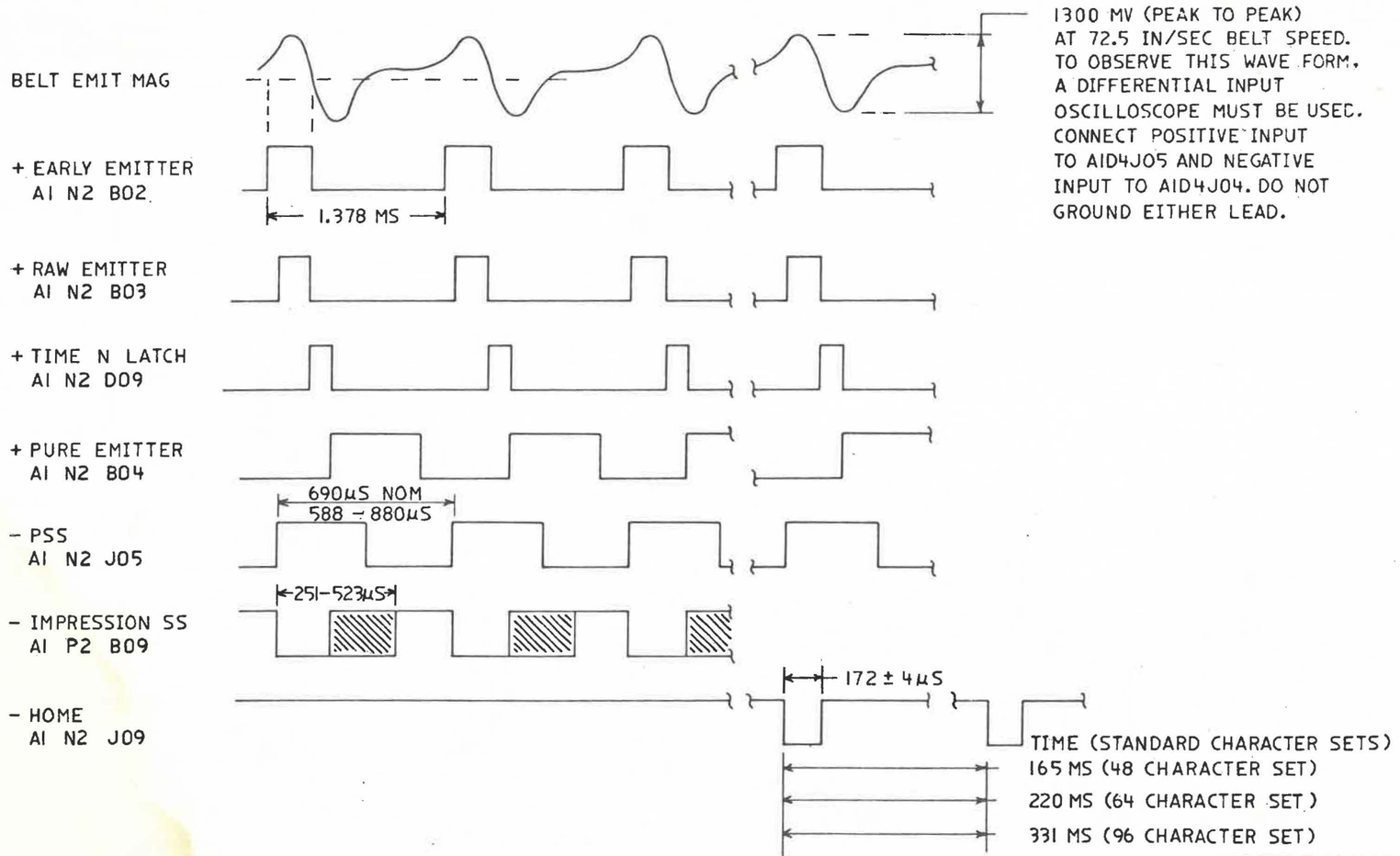

1300 MV (PEAK TO PEAK) AT 72.5 IN/SEC BELT SPEED. TO OBSERVE THIS WAVE FORM, A DIFFERENTIAL INPUT OSCILLOSCOPE MUST BE USED. CONNECT POSITIVE INPUT TO A1D4J05 AND NEGATIVE INPUT TO A1D4J04. DO NOT GROUND EITHER LEAD.

EC HISTORY		DRAWING TITLE
15NOV77	155975C	PRINT SUBSCAN (PSS) TIMING
		MACH 5211
		PART NO 8324060
		CLASSIFICATION

C

IBM CORP

620-0131 MROF 750522201 ALD DRAWING FORMAT ASTROCLOTH N6501 3730 ABCDE
GRAPHIC CONTROLS CORPORATION

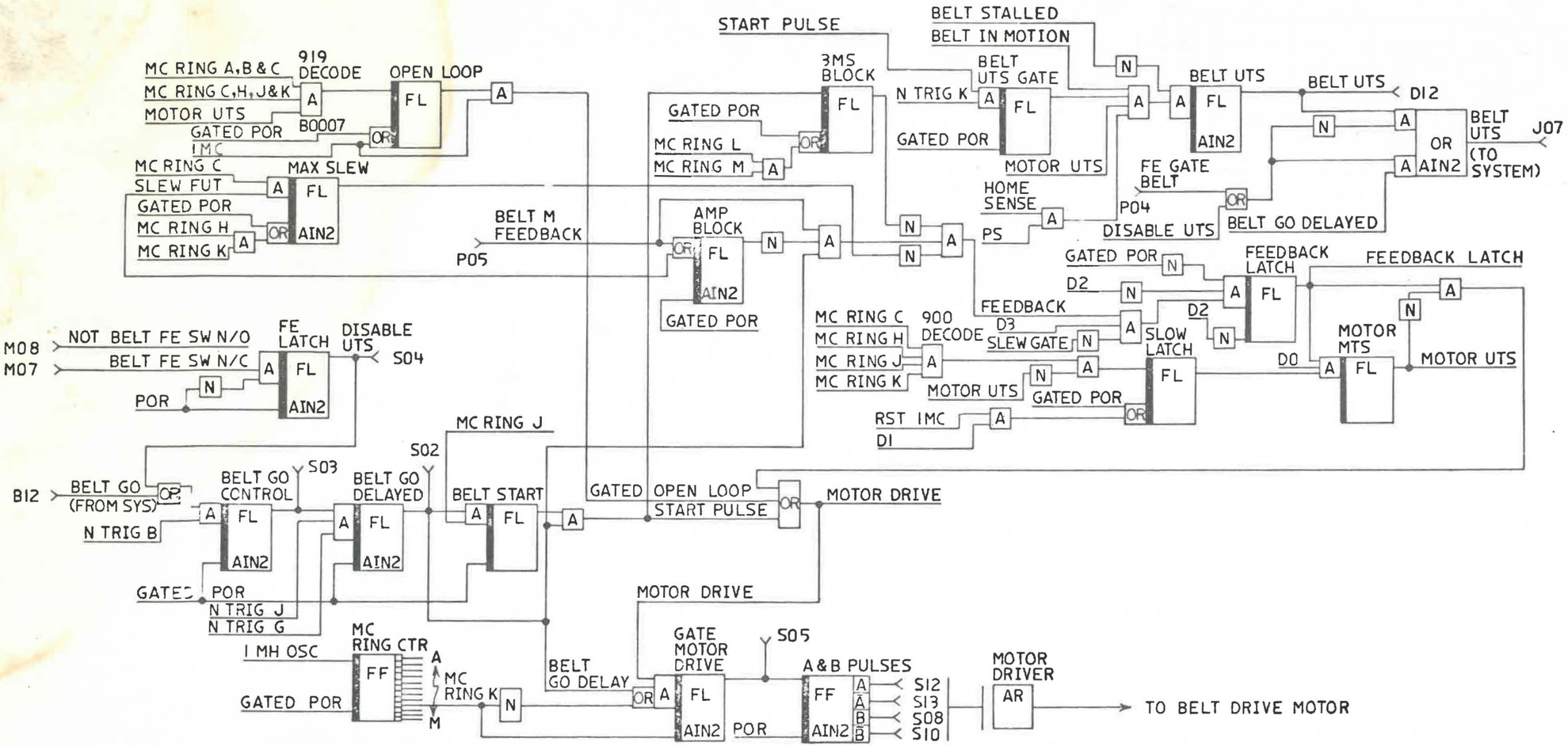

NOTE

1. THIS DIAGRAM IS NOT A PRECISE REPRESENTATION OF ACTUAL LOGICS, BUT IS PRESENTED FOR EASE OF UNDERSTANDING OF LOGIC FLOW

EC HISTORY		DRAWING TITLE
15NOV77	155975C	BELT MOTOR CONTROL LOGIC
		MACH 5211
		PART NO 8324061
C		CLASSIFICATION

IBM CORP

1925

1925

GRAPHIC MEDIA, GRAPHIC CONTROLS CORPORATION Buffalo, New York Printed in U.S.A.

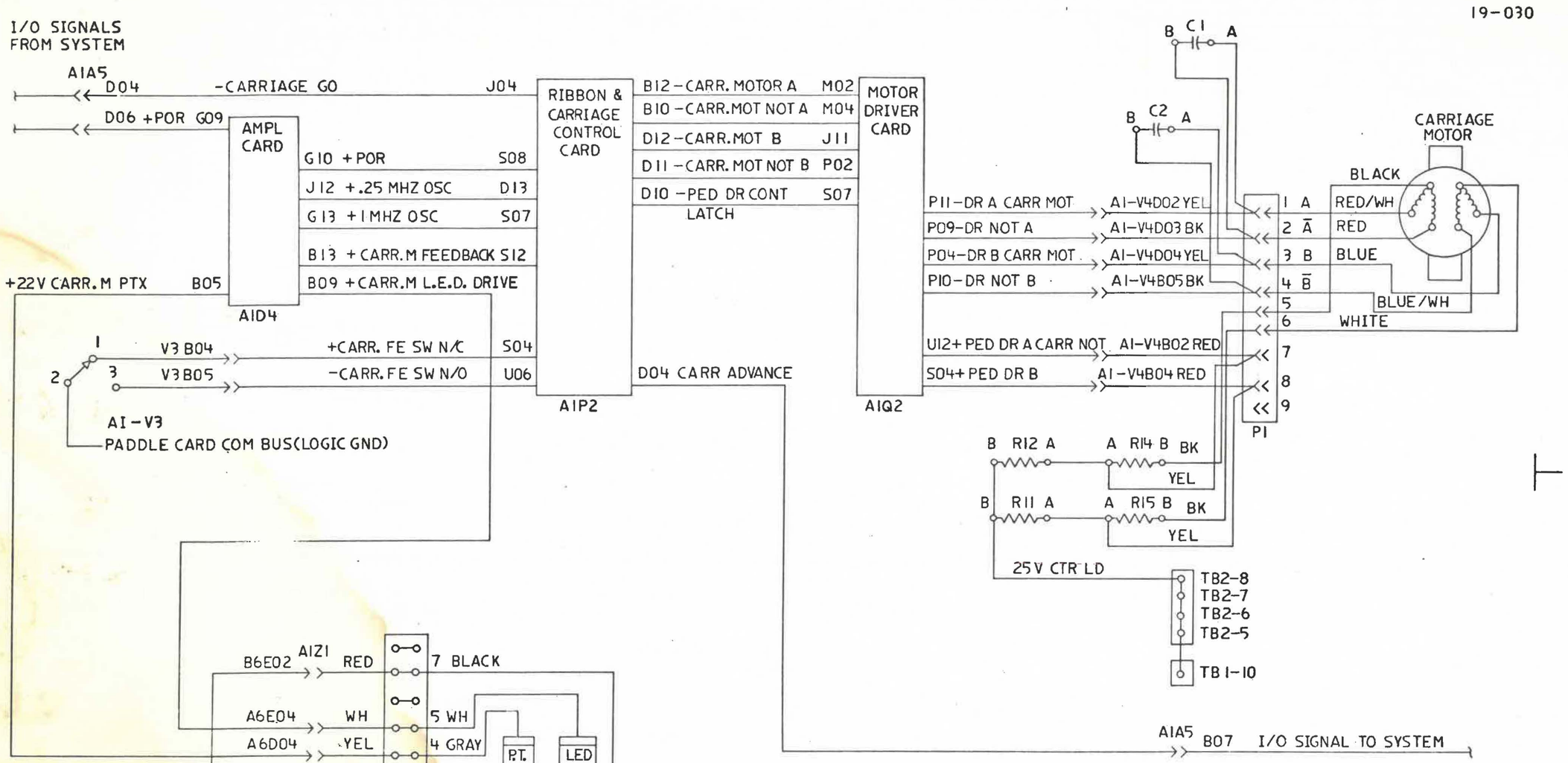

EC HISTORY		DRAWING TITLE
15NOV77	155975C	CARR MOTOR CONTROL DIAGRAM
		MACH 5211
		PART NO 8324062
		CLASSIFICATION

C

IBM CORP

620-0131-1 MRO# 780522201 ALD DRAWING FORMAT ASTROCLOTH N850T 3730 ABCDE
GRAPHIC CONTROLS CORPORATION Buffalo, New York Printed in U.S.A.

CARRIAGE MOTOR - TIMING 6 LPI SINGLE SPACE

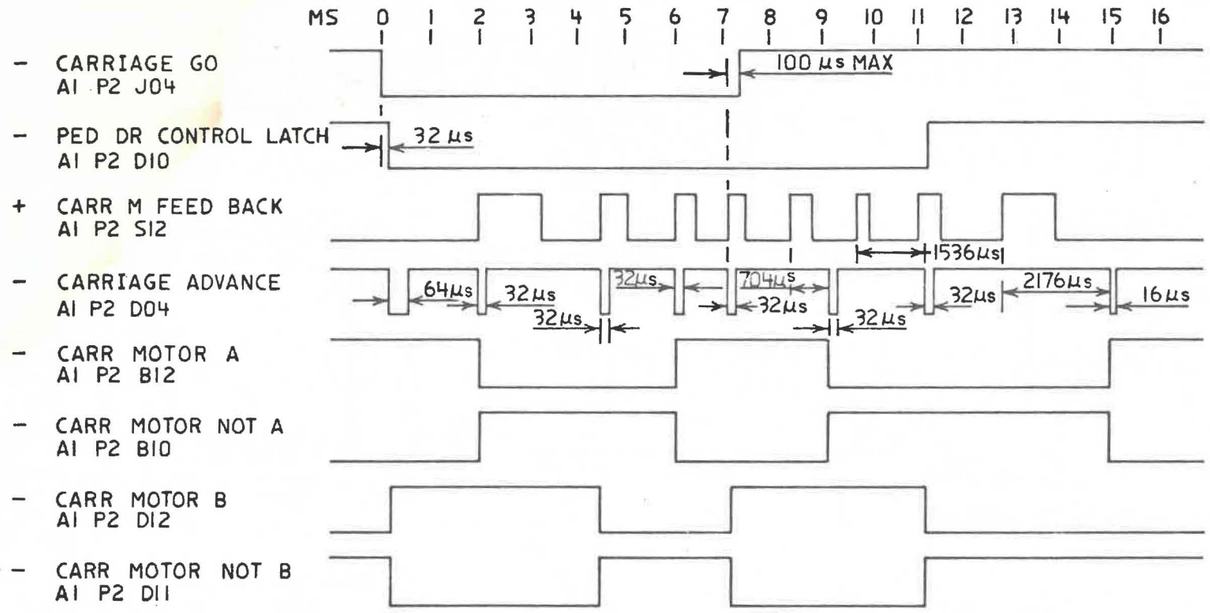

NOTE: CARR MOTOR A, NOT A, B, NOT B, MAYBE 180° FROM AS SHOWN

EC HISTORY		DRAWING TITLE
15NOV77	155975C	CARRIAGE MOTOR CONTROL TIMING
		MACH 5211
		PART NO 8324063
C		CLASSIFICATION

IBM CORP

1035

1035

620-0131-1 MROF 760822201 ALD DRAWING FORMAT ASTROCLOTH N6501 3730 ABCDE

DRAFTING MEDIA GRAPHIC CONTROLS CORPORATION Buffalo, New York Printed in U.S.A.

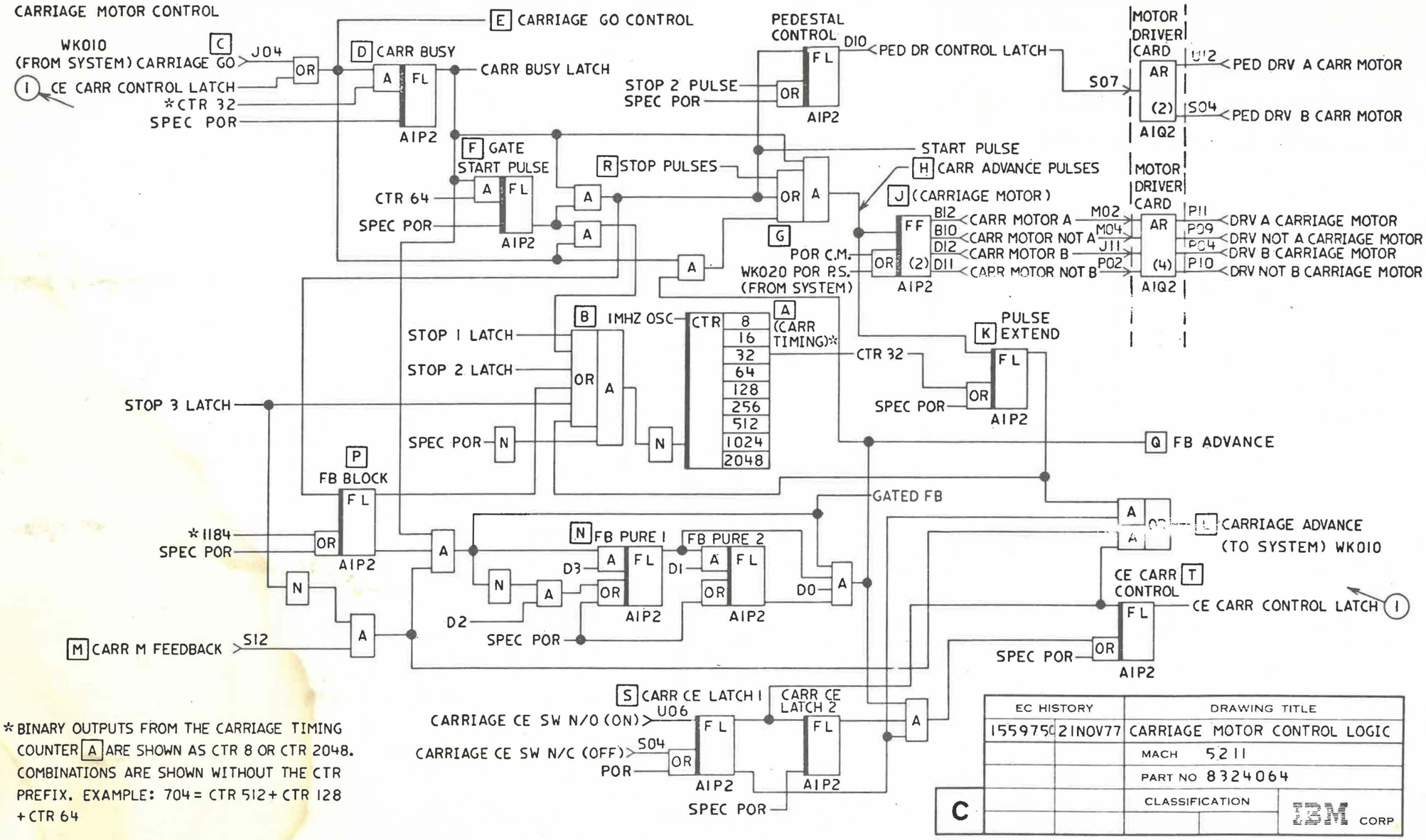

* BINARY OUTPUTS FROM THE CARRIAGE TIMING COUNTER A ARE SHOWN AS CTR 8 OR CTR 2048. COMBINATIONS ARE SHOWN WITHOUT THE CTR PREFIX. EXAMPLE: 704 = CTR 512 + CTR 128 + CTR 64

EC HISTORY		DRAWING TITLE
1559750	21NOV77	CARRIAGE MOTOR CONTROL LOGIC
		MACH 5211
		PART NO 8324064
		CLASSIFICATION

C

IBM CORP

620-0131 1 MRO# 780522201 ALD DRAWING FORMAT 3730 ABCDE
DRAFTING MEDIA GRAPHIC CONTROLS CORPORATION Buffalo, New York Printed in U.S.A.

19-045

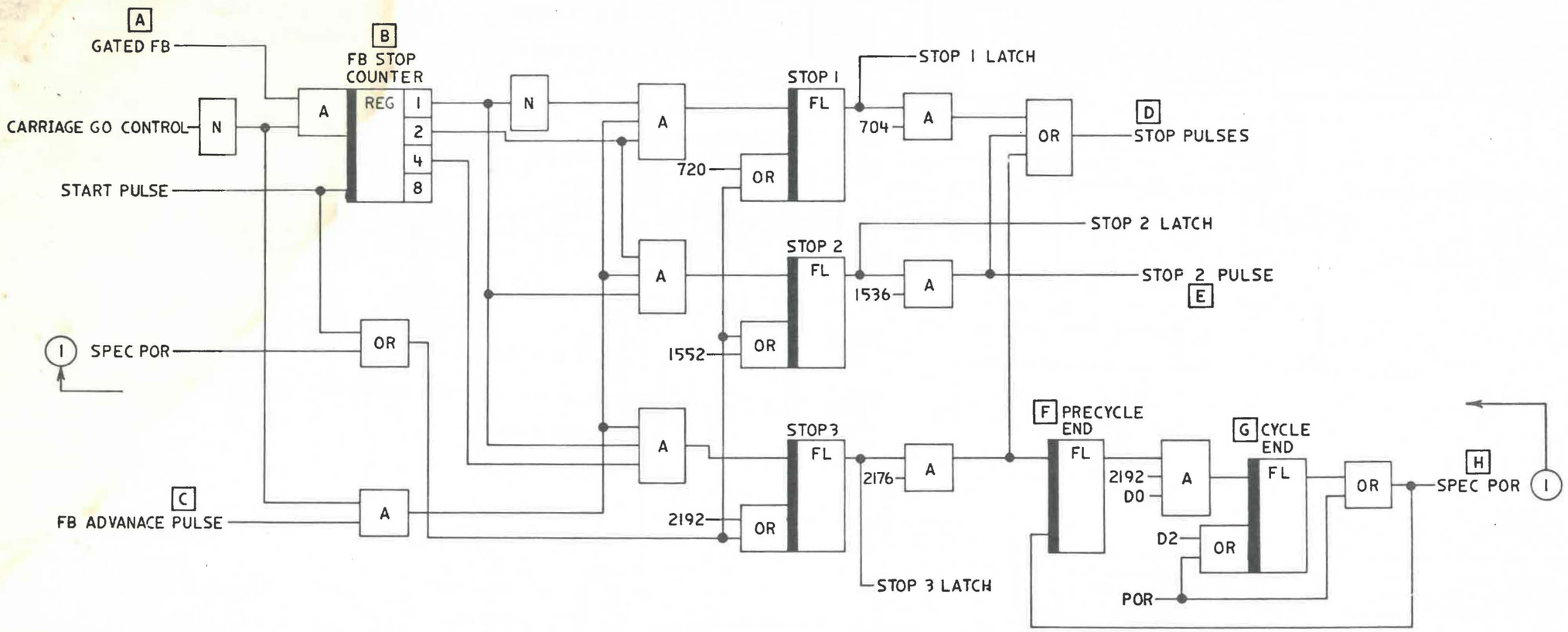

EC HISTORY		DRAWING TITLE
155975C	21NOV77	CARRIAGE MOTOR STOP LOGIC
		MACH 5211
		PART NO 8324065
		CLASSIFICATION

C

IBM CORP

19-045

19-045

620-0131-1 MROZ 780522201 ALD DRAWING FORMAT ASTROCLOTH N6501 3730 ABCDE

DRAFTING MEDIA GRAPHIC CONTROLS CORPORATION Buffalo New York

19-050

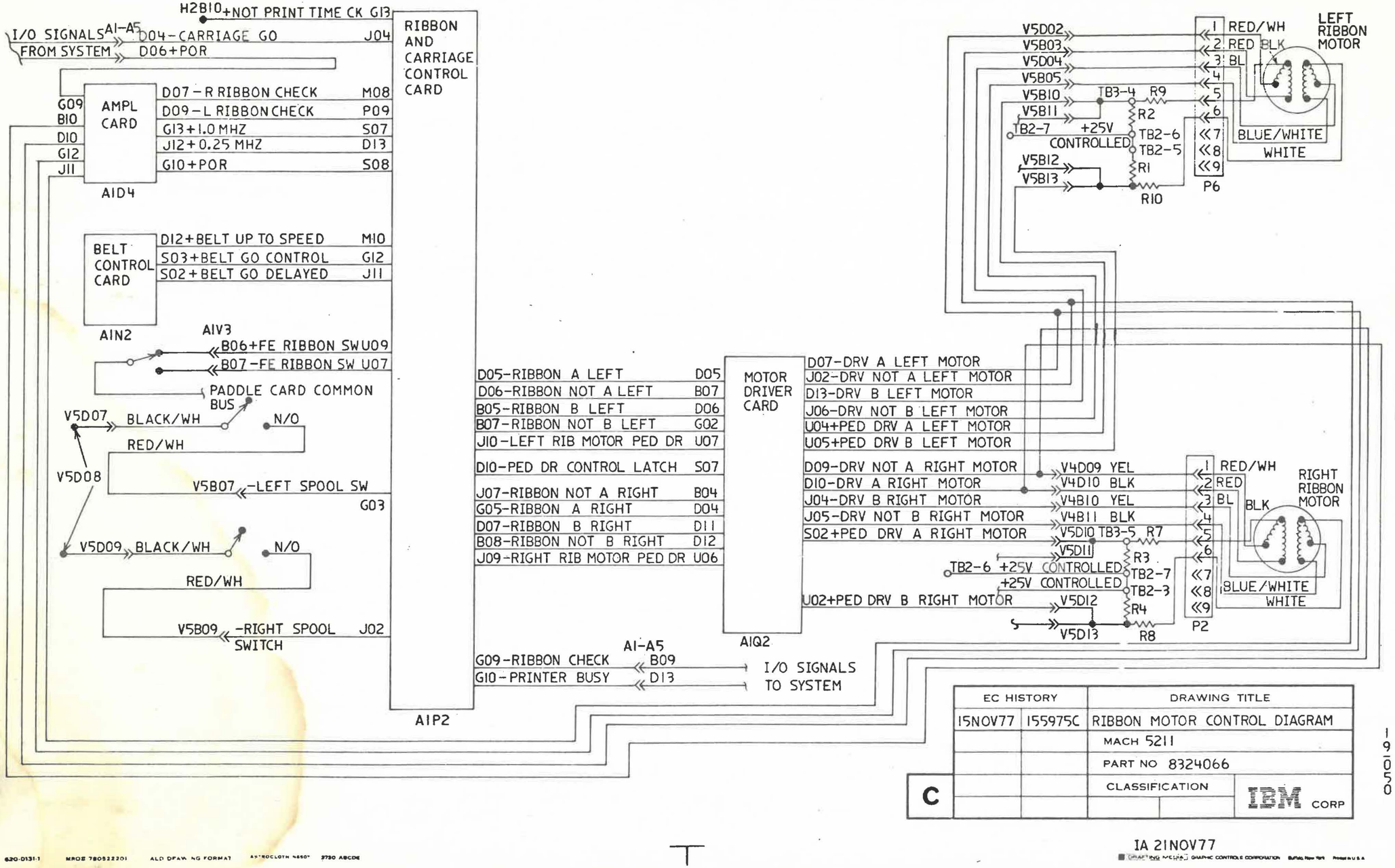

EC HISTORY		DRAWING TITLE
15NOV77	155975C	RIBBON MOTOR CONTROL DIAGRAM
		MACH 5211
		PART NO 8324066
C		CLASSIFICATION

IBM CORP

1950

1950

IA 21NOV77

620-0131-1 MROE 780522201 ALD DRAWING FORMAT ASTROCLOTH 4650* 2730 ABCDE
DRAFTING MEDIA GRAPHIC CONTROLS CORPORATION Buffalo, New York Printed in U.S.A.

19-055

RIBBON DRIVE RIGHT (NOTE 1)

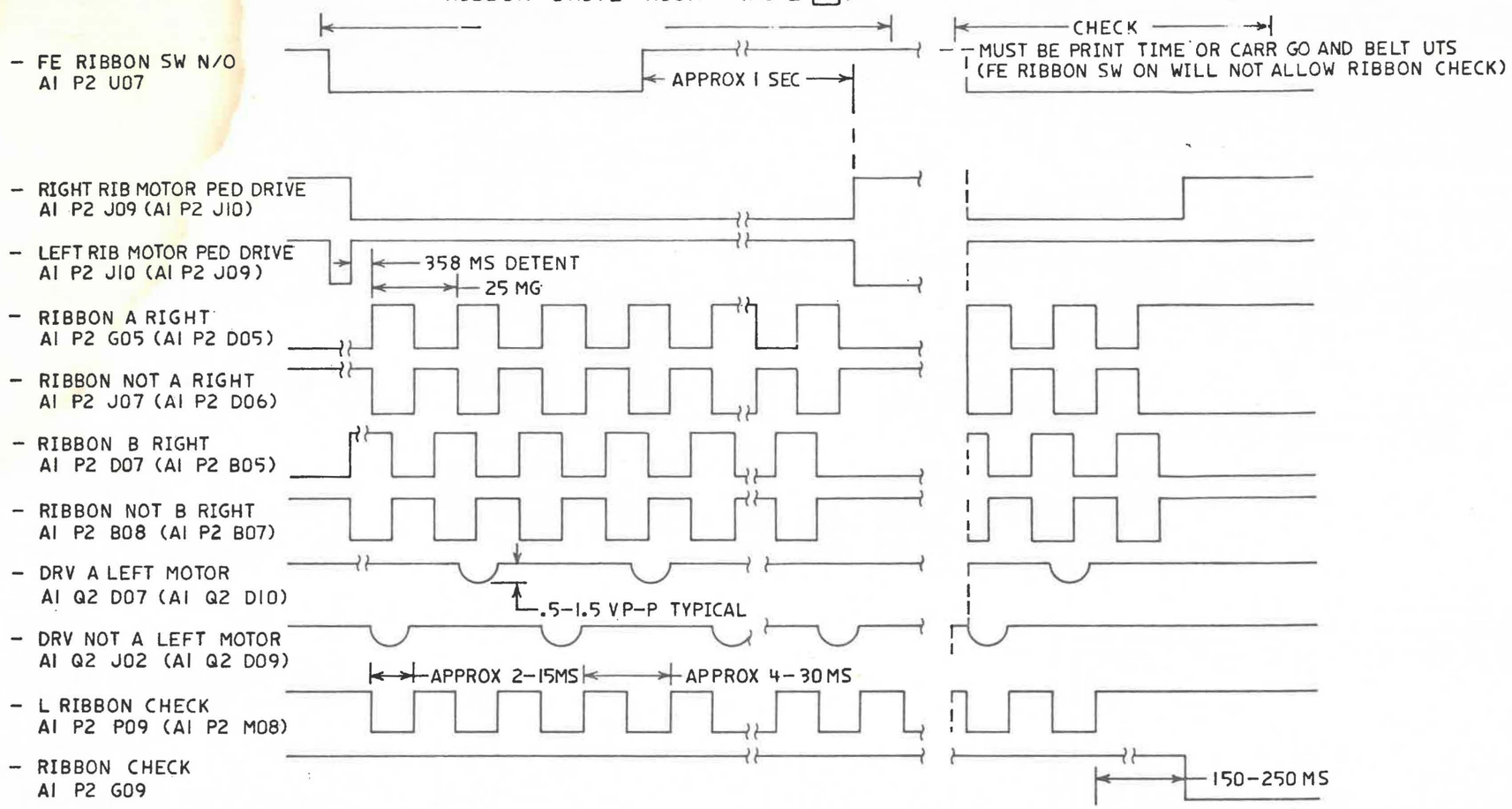

NOTE 1 PROBE POINTS IN PARENTHESES ARE FOR LEFT DRIVE

EC HISTORY		DRAWING TITLE
15NOV77	155975C	RIBBON MOTOR CONTROL TIMING
		MACH 5211
		PART NO 8324067
		CLASSIFICATION

C

IBM CORP

1955

1955

620-0131-1 MROZ 780522201 ALD DRAWING FORMAT ASTROCLOTH 14501 3780 ABCDE

DRAFTING MEDIA GRAPHIC CONTROLS CORPORATION Printed in U.S.A.

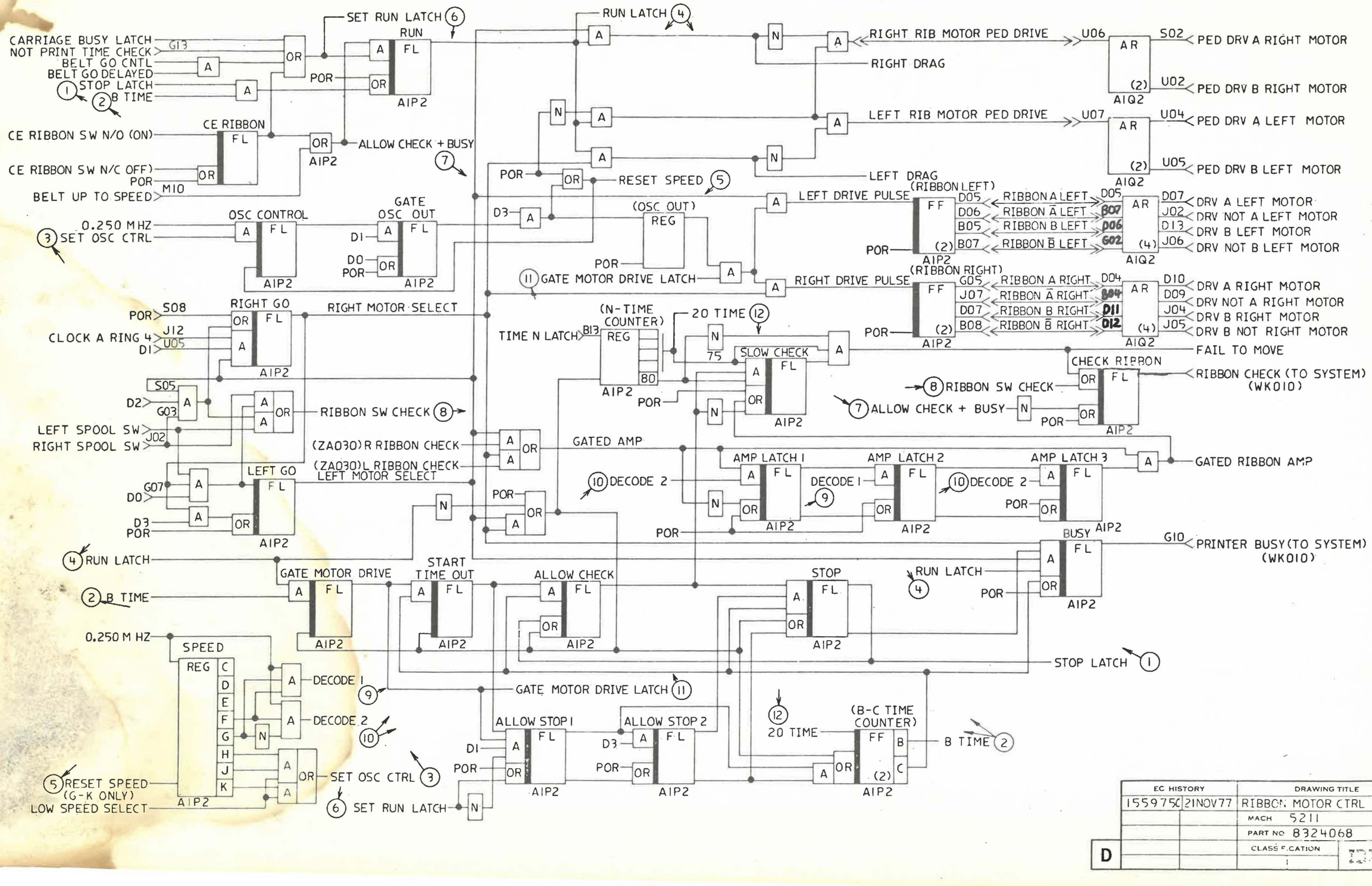

EC HISTORY		DRAWING TITLE
155975C	21NOV77	RIBBON MOTOR CTRL LOGIC
		MACH 5211
		PART NO 8324068
		CLASSIFICATION I

D

19-065

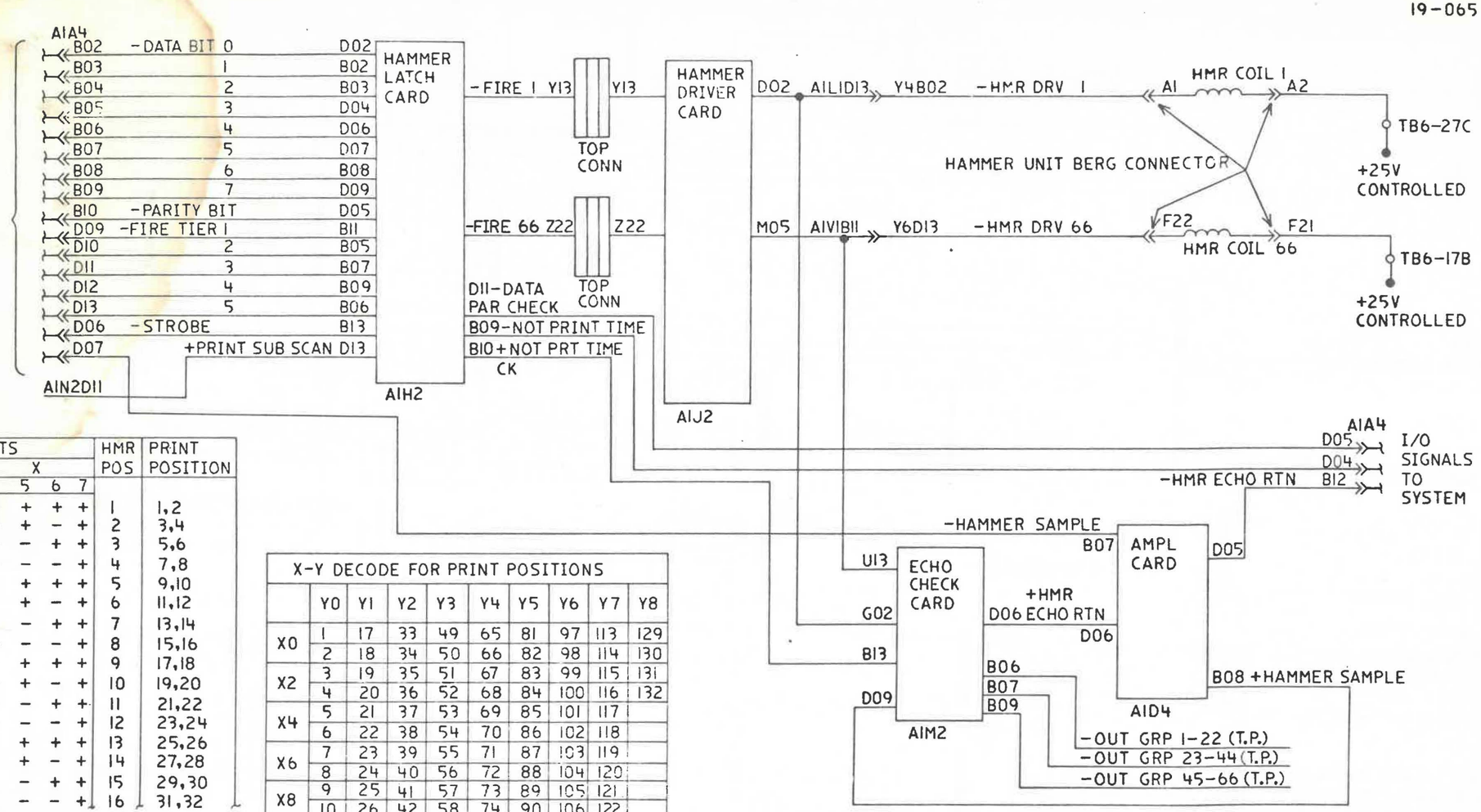

DATA BITS Y 0	1	2	3	DATA BITS X 4	5	6	7	HMR POS	PRINT POSITION
+	+	+	+	+	+	+	+	1	1,2
+	+	+	+	+	+	−	+	2	3,4
+	+	+	+	+	−	+	+	3	5,6
+	+	+	+	+	−	−	+	4	7,8
+	+	+	+	−	+	+	+	5	9,10
+	+	+	+	−	+	−	+	6	11,12
+	+	+	+	−	−	+	+	7	13,14
+	+	+	+	−	−	−	+	8	15,16
+	+	+	−	+	+	+	+	9	17,18
+	+	+	−	+	+	−	+	10	19,20
+	+	+	−	+	−	+	+	11	21,22
+	+	+	−	+	−	−	+	12	23,24
+	+	+	−	−	+	+	+	13	25,26
+	+	+	−	−	+	−	+	14	27,28
+	+	+	−	−	−	+	+	15	29,30
+	+	+	−	−	−	−	+	16	31,32
+	+	−	−	−	−	−	+	32	63,64
+	−	+	−	−	−	−	+	48	95,96
+	−	−	−	−	−	−	+	64	127,128
−	+	+	+	+	+	+	+	65	129,130
−	+	+	+	+	+	−	+	66	131,132

NOTE
REFER TO LOGIC DIAGRAM SECTION 18 FOR POINT TO POINT WIRING OF EACH HAMMER COIL.

X-Y DECODE FOR PRINT POSITIONS									
	Y0	Y1	Y2	Y3	Y4	Y5	Y6	Y7	Y8
X0	1	17	33	49	65	81	97	113	129
	2	18	34	50	66	82	98	114	130
X2	3	19	35	51	67	83	99	115	131
	4	20	36	52	68	84	100	116	132
X4	5	21	37	53	69	85	101	117	
	6	22	38	54	70	86	102	118	
X6	7	23	39	55	71	87	103	119	
	8	24	40	56	72	88	104	120	
X8	9	25	41	57	73	89	105	121	
	10	26	42	58	74	90	106	122	
X10	11	27	43	59	75	91	107	123	
	12	28	44	60	76	92	108	124	
X12	13	29	45	61	77	93	109	125	
	14	30	46	62	78	94	110	126	
X14	15	31	47	63	79	95	111	127	
	16	32	48	64	80	96	112	128	

EC HISTORY		DRAWING TITLE
15 NOV 77	155975C	HAMMER CTRL DIAGRAM MODEL 1
		MACH 5211 MODEL 1
		PART NO 8324069
C		CLASSIFICATION
		IBM CORP

1-9-065

1-9-065

820-0131-1 MROZ 78052201 ALD DRAWING FORMAT ASTROCLOTH N690* 3730 ABCDE

DRAFTING MEDIA GRAPHIC CONTROLS CORPORATION Buffalo, New York Printed in U.S.A.

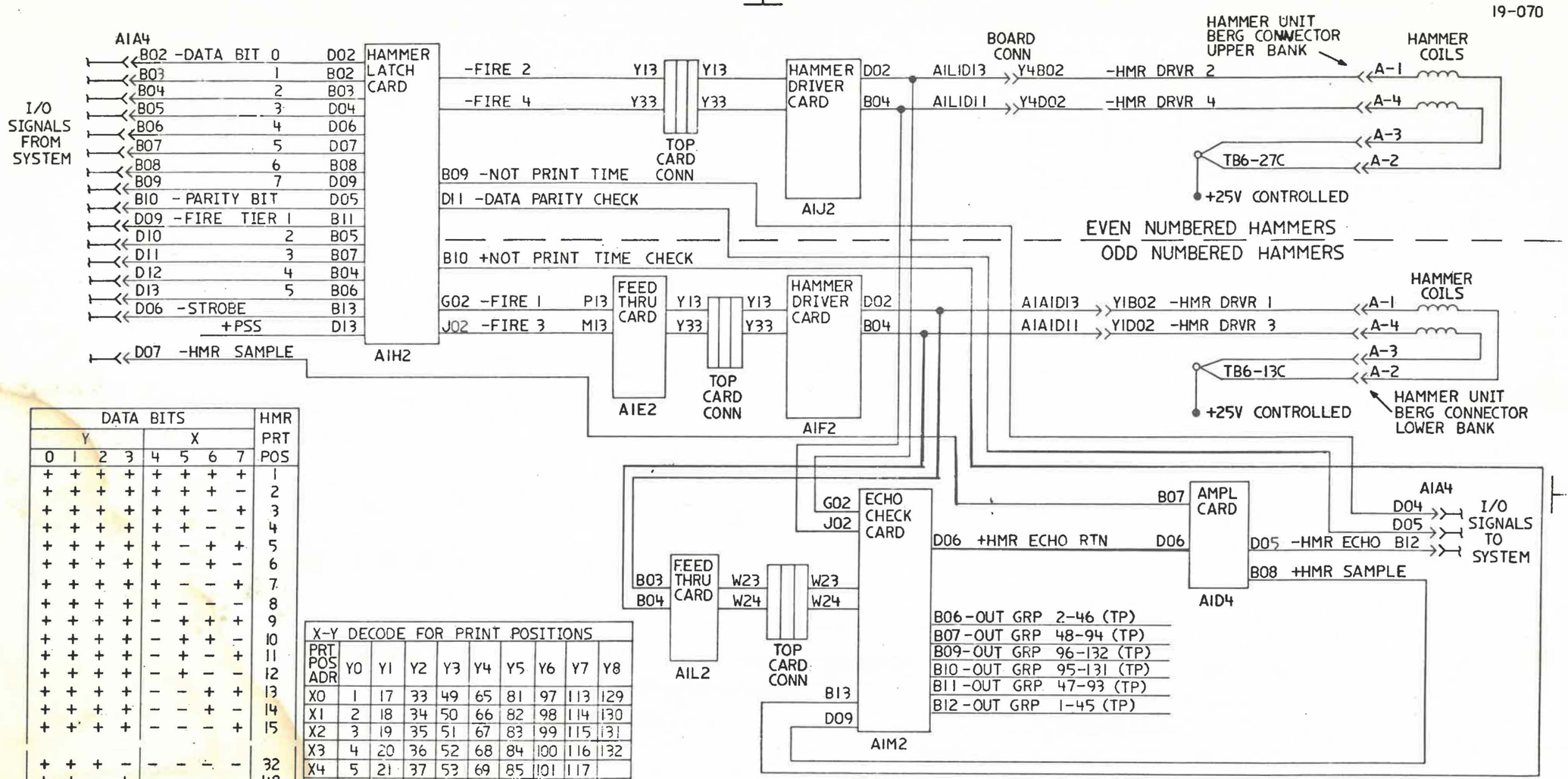

DATA BITS								HMR PRT POS
Y				X				
0	1	2	3	4	5	6	7	
+	+	+	+	+	+	+	+	1
+	+	+	+	+	+	+	−	2
+	+	+	+	+	+	−	+	3
+	+	+	+	+	+	−	−	4
+	+	+	+	+	−	+	+	5
+	+	+	+	+	−	+	−	6
+	+	+	+	+	−	−	+	7
+	+	+	+	+	−	−	−	8
+	+	+	+	−	+	+	+	9
+	+	+	+	−	+	+	−	10
+	+	+	+	−	+	−	+	11
+	+	+	+	−	+	−	−	12
+	+	+	+	−	−	+	+	13
+	+	+	+	−	−	+	−	14
+	+	+	+	−	−	−	+	15
+	+	+	−	−	−	−	−	32
+	+	−	+	−	−	−	−	48
+	+	−	−	−	−	−	−	64
+	−	+	+	−	−	−	−	80
+	−	+	−	−	−	−	−	96
+	−	−	+	−	−	−	−	112
+	−	−	−	−	−	−	−	128
−	+	+	+	−	−	−	−	132

X-Y DECODE FOR PRINT POSITIONS									
PRT POS ADR	Y0	Y1	Y2	Y3	Y4	Y5	Y6	Y7	Y8
X0	1	17	33	49	65	81	97	113	129
X1	2	18	34	50	66	82	98	114	130
X2	3	19	35	51	67	83	99	115	131
X3	4	20	36	52	68	84	100	116	132
X4	5	21	37	53	69	85	101	117	
X5	6	22	38	54	70	86	102	118	
X6	7	23	39	55	71	87	103	119	
X7	8	24	40	56	72	88	104	120	
X8	9	25	41	57	73	89	105	121	
X9	10	26	42	58	74	90	106	122	
X10	11	27	43	59	75	91	107	123	
X11	12	28	44	60	76	92	108	124	
X12	13	29	45	61	77	93	109	125	
X13	14	30	46	62	78	94	110	126	
X14	15	31	47	63	79	95	111	127	
X15	16	32	48	64	80	96	112	128	

REFER TO LOGIC WIRING DIAGRAM SECTION 18 FOR POINT TO POINT WIRING OF EACH HAMMER COIL

EC HISTORY		DRAWING TITLE
15NOV77	155975C	HAMMER CONTROL DIAG. MODEL 2
		MACH 5211 MODEL 2
		PART NO 8324070
C		CLASSIFICATION
		IBM CORP

19-070

19-070

820-0131-0 MROS 780522201 ALD DRAWING FORMAT ASTROCLOTH N8301 8278
DRAFTING MEDIA GRAPHIC CONTROLS CORPORATION Buffalo, New York Printed in U.S.A.

PRINT CONTROL TIMING (MODEL I & II)

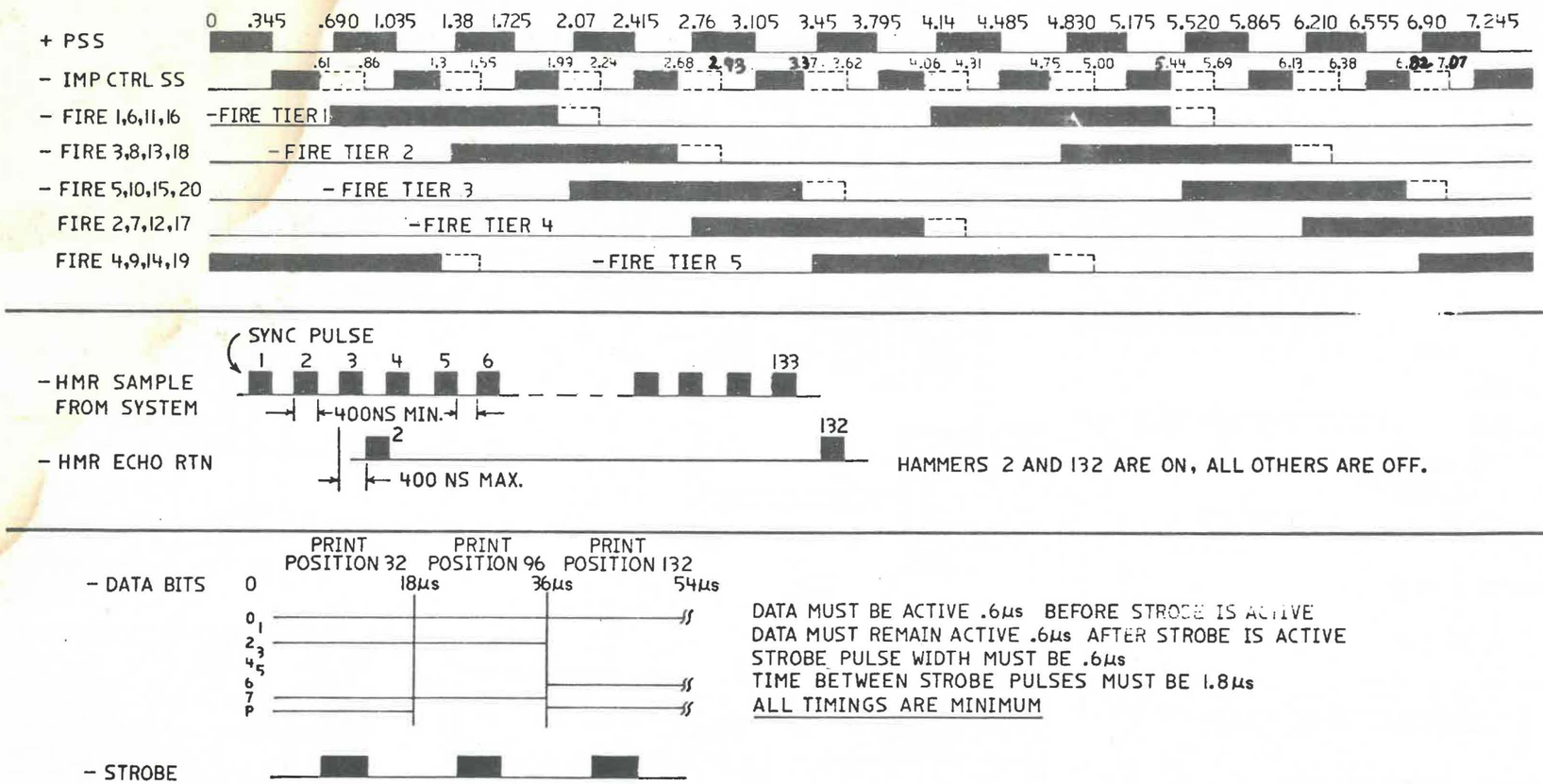

HAMMERS 2 AND 132 ARE ON, ALL OTHERS ARE OFF.

DATA MUST BE ACTIVE .6μs BEFORE STROBE IS ACTIVE
DATA MUST REMAIN ACTIVE .6μs AFTER STROBE IS ACTIVE
STROBE PULSE WIDTH MUST BE .6μs
TIME BETWEEN STROBE PULSES MUST BE 1.8μs
ALL TIMINGS ARE MINIMUM

EC HISTORY		DRAWING TITLE
15 NOV 77	155975C	HAMMER CONTROL TIMING
		MACH 5211
		PART NO 8324071
		CLASSIFICATION

C

IBM CORP

19-075

19-075

620-0131-1 MROD 780922201 ALD DRAWING FORMAT ASTROLLOTH NS201 3730 ABCDE
GRAFTING MEDIA GRAPHIC CONTROLS CORPORATION Buffalo, New York Printed in U.S.A.

HAMMER ADDRESSING AND FIRING NOTE [1]

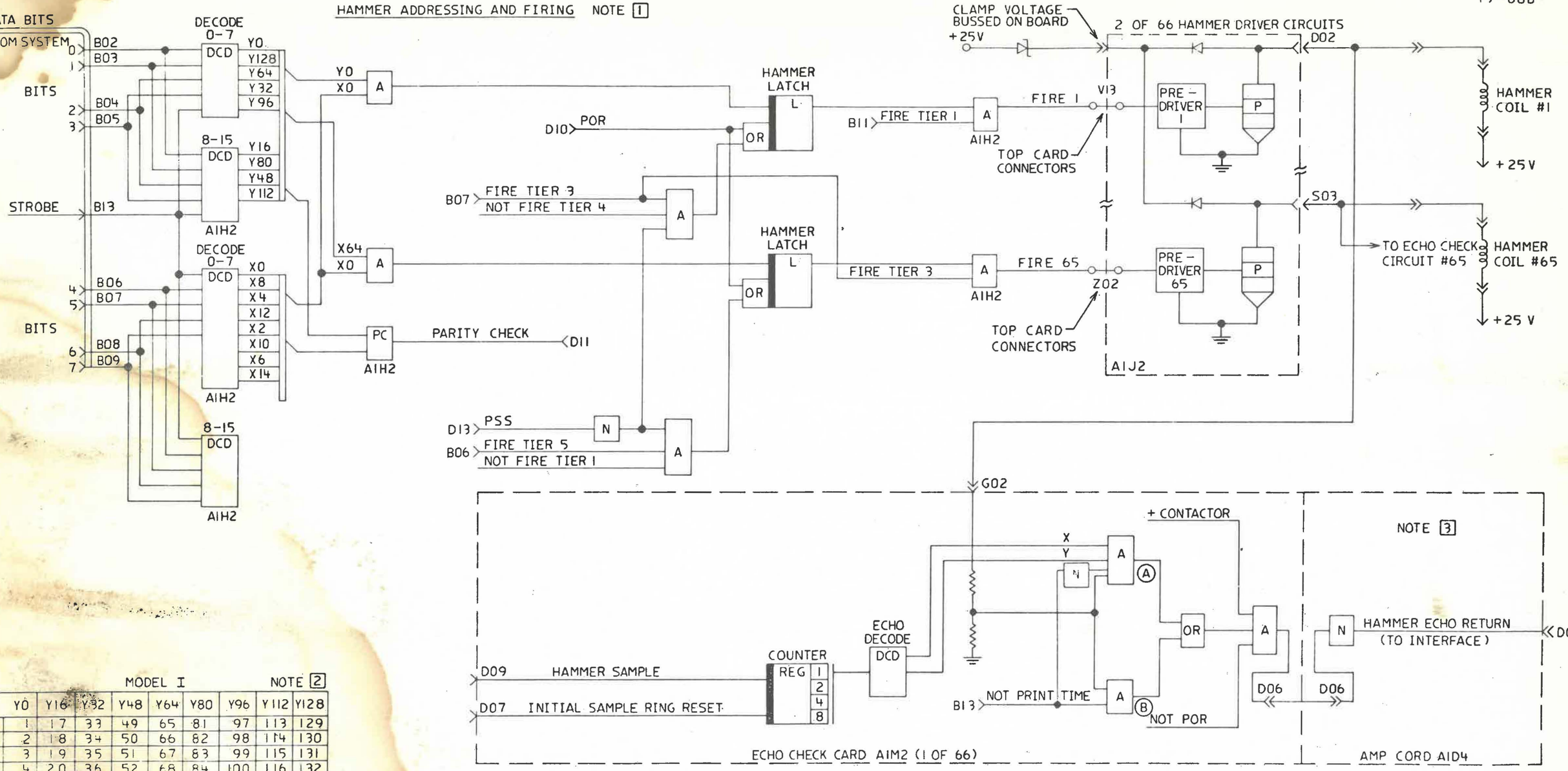

MODEL I — NOTE [2]

	Y0	Y16	Y32	Y48	Y64	Y80	Y96	Y112	Y128
	1	17	33	49	65	81	97	113	129
X0	2	18	34	50	66	82	98	114	130
	3	19	35	51	67	83	99	115	131
X2	4	20	36	52	68	84	100	116	132
	5	21	37	53	69	85	101	117	
X4	6	22	38	54	70	86	102	118	
	7	23	39	55	71	87	103	119	
X6	8	24	40	56	72	88	104	120	
	9	25	41	57	73	89	105	121	
X8	10	26	42	58	74	90	106	122	
	11	27	43	59	75	91	107	123	
X10	12	28	44	60	76	92	108	124	
	13	29	45	61	77	93	109	125	
X12	14	30	46	62	78	94	110	126	
	15	31	47	63	79	95	111	127	
X14	16	32	48	64	80	96	112	128	

NOTES

[1] THIS DIAGRAM IS FOR EASE OF UNDERSTANDING THE MODEL I, IN POSITIVE LOGIC. IT DOES NOT REPRESENT ACTUAL LOGIC

[2] THIS CHART REPRESENTS THE ACTUAL HAMMER DECODE LINES

[3] (A) ANY HAMMER ON CHECK – AN OUTPUT WHEN NOT PRINT TIME
(B) HAMMER ECHO CHECK – ANY INCORRECT OUTPUT DURING PRINT TIME

EC HISTORY		DRAWING TITLE
155975C	16NOV77	HAMMER CONTROL LOGIC
		MACH 5211
		PART NO 8324072
		CLASSIFICATION

D

IBM Maintenance Library

5211 Printer Parts Catalog

S124-0139-1

Preface

This Parts Catalog (PC) contains listings and illustrations of all replaceable assemblies, subassemblies and detail parts released on or before February 1, 1978.

This Parts Catalog is Section 20 of the *5211 Maintenance Information Manual* and uses 20 as a prefix for page numbering.

Second Edition (March 1978)

This is a major revision of, and obsoletes, S124-0139-0.

Changes that affect this catalog are made periodically; any such changes will be reported in subsequent revisions or Technical Newsletters.

Requests for copies of IBM publications should be made to your IBM representative or to the IBM branch office serving your locality.

This manual has been prepared by the IBM System Products Division, Product Publications, Dept. K10, P. O. Box 6, Endicott, N. Y. 13760.

A form is provided at the back of this publication for reader's comments. If the form has been removed, comments may be sent to the above address. Comments become the property of IBM.

©Copyright International Business Machines Corporation 1977

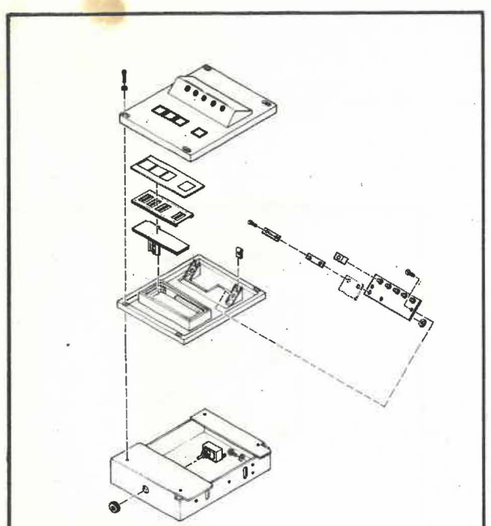

OPERATOR PANEL ASSEMBLY
SEE FIGURE 3A
PAGE 20-018

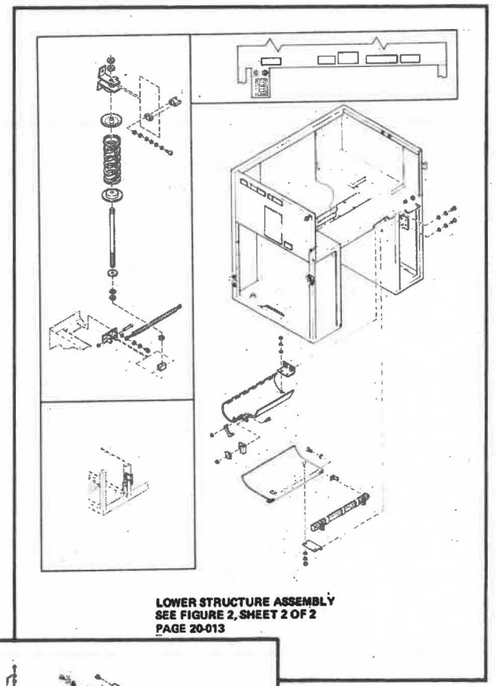

LOWER STRUCTURE ASSEMBLY
SEE FIGURE 2, SHEET 2 OF 2
PAGE 20-013

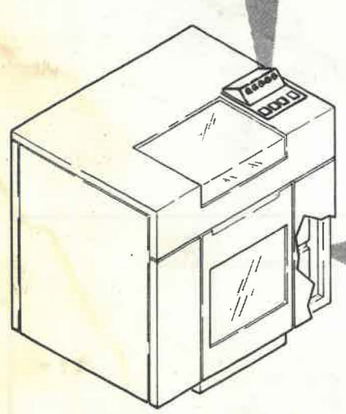

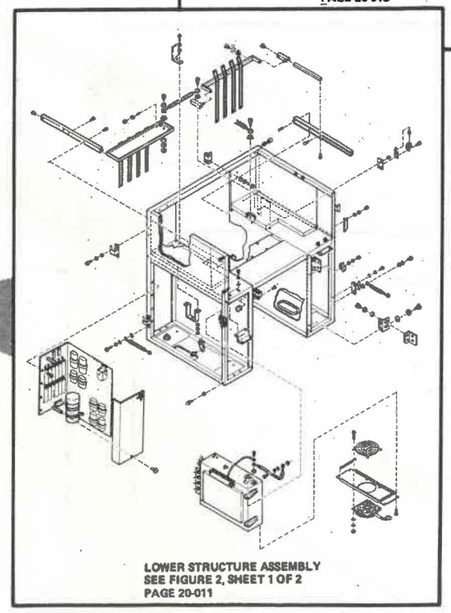

LOWER STRUCTURE ASSEMBLY
SEE FIGURE 2, SHEET 1 OF 2
PAGE 20-011

VISUAL INDEX 3

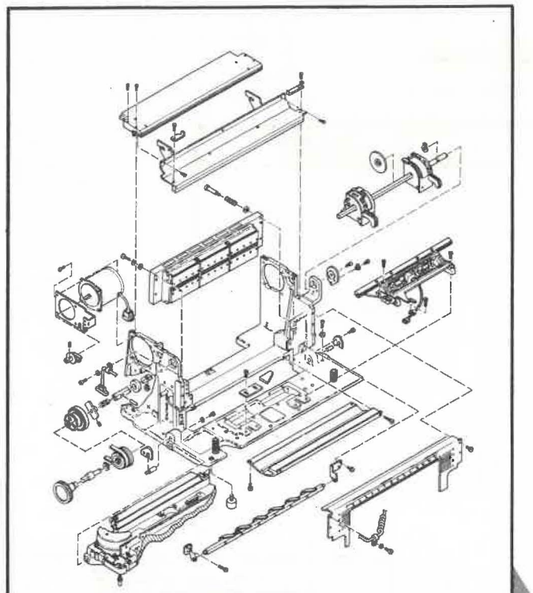

BASIC MECHANISM ASSEMBLY
SEE FIGURE 4
PAGE 20-019

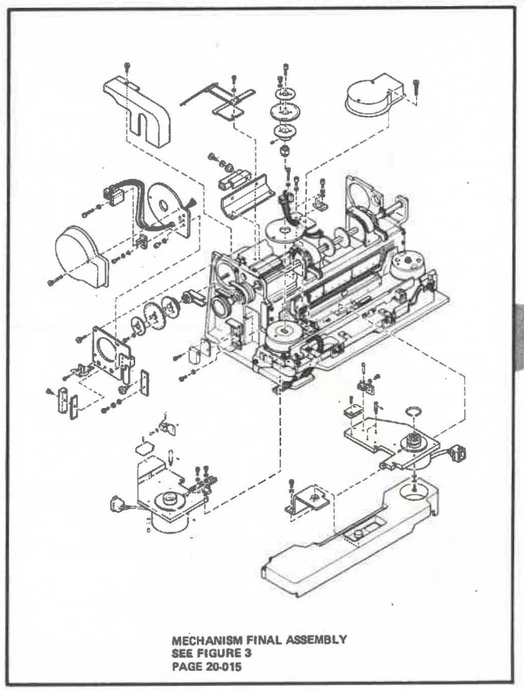

MECHANISM FINAL ASSEMBLY
SEE FIGURE 3
PAGE 20-015

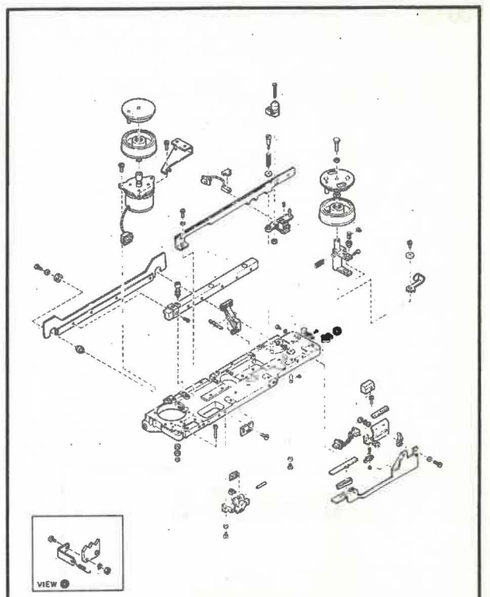

FRONT ASSEMBLY
SEE FIGURE 5
PAGE 20-021

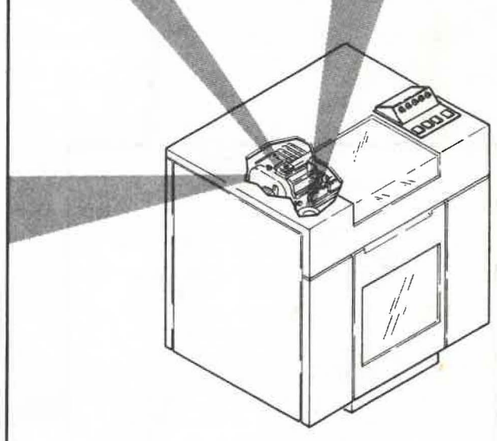

VISUAL INDEX 4

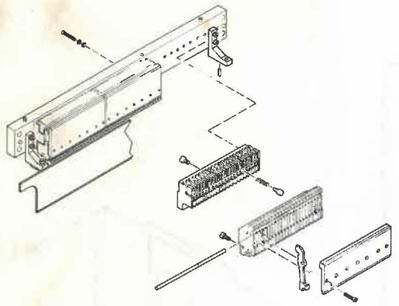

FORMS GUIDE ASSEMBLY—MODEL 1
SEE FIGURE 6
PAGE 20-022

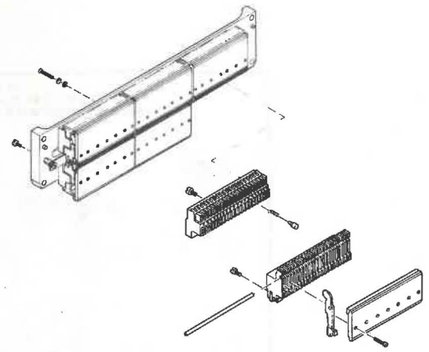

HAMMER UNIT ASSEMBLY MODEL 2
SEE FIGURE 7
PAGE 20-024

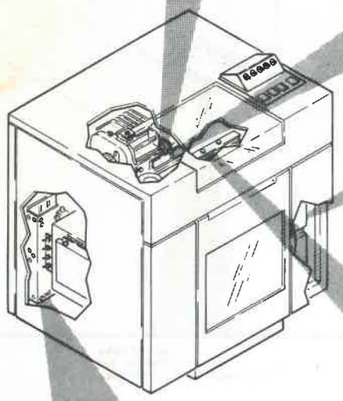

CABLE ASSEMBLIES
WITH COMPONENT PARTS
SEE FIGURE 12
PAGE 20-033

POWER PLATE ASSEMBLY
SEE FIGURE 11
PAGE 20-031

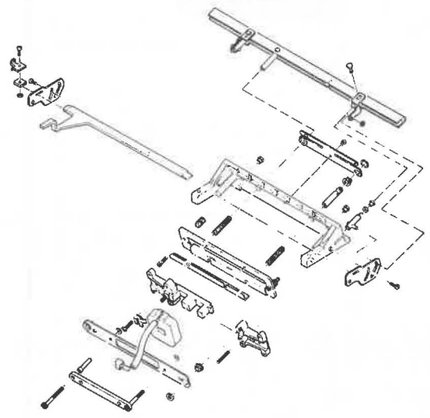

LOWER CLAMP ASSEMBLY
SEE FIGURE 8
PAGE 20-025

VISUAL INDEX 5

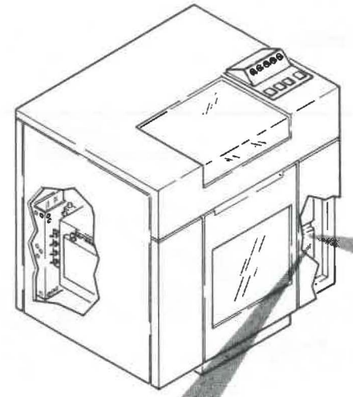

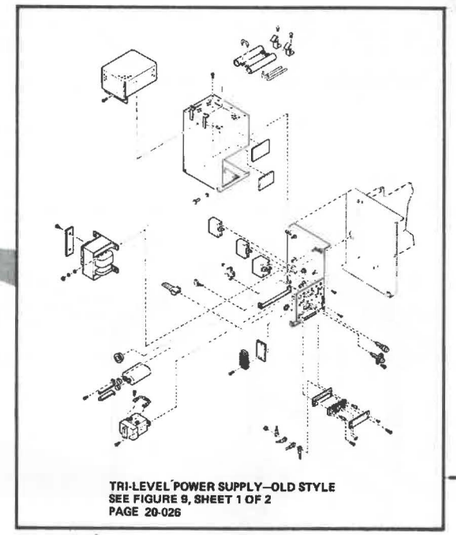

TRI-LEVEL POWER SUPPLY—OLD STYLE
SEE FIGURE 9, SHEET 1 OF 2
PAGE 20-026

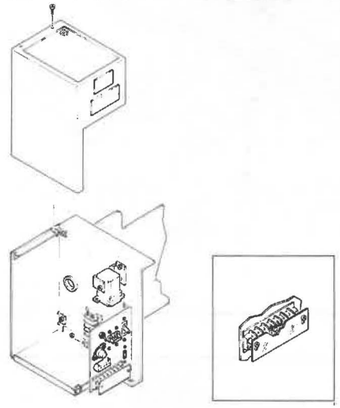

TRI-LEVEL POWER SUPPLY—NEW STYLE
SEE FIGURE 9A, SHEET 1 OF 2
PAGE 20-028

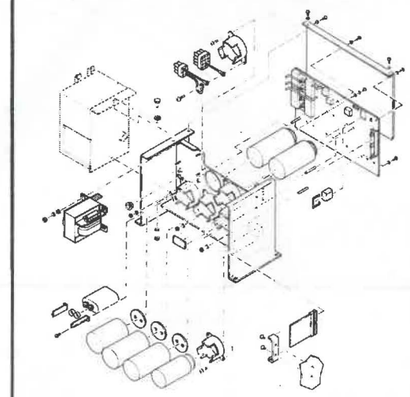

TRI-LEVEL POWER SUPPLY—OLD STYLE
SEE FIGURE 9, SHEET 2 OF 2
PAGE 20-027

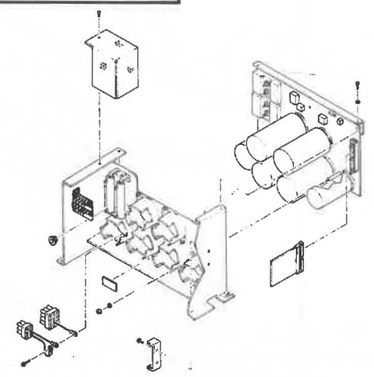

TRI-LEVEL POWER SUPPLY—NEW STYLE
SEE FIGURE 9A, SHEET 2 OF 2
PAGE 20-029

VISUAL INDEX 6

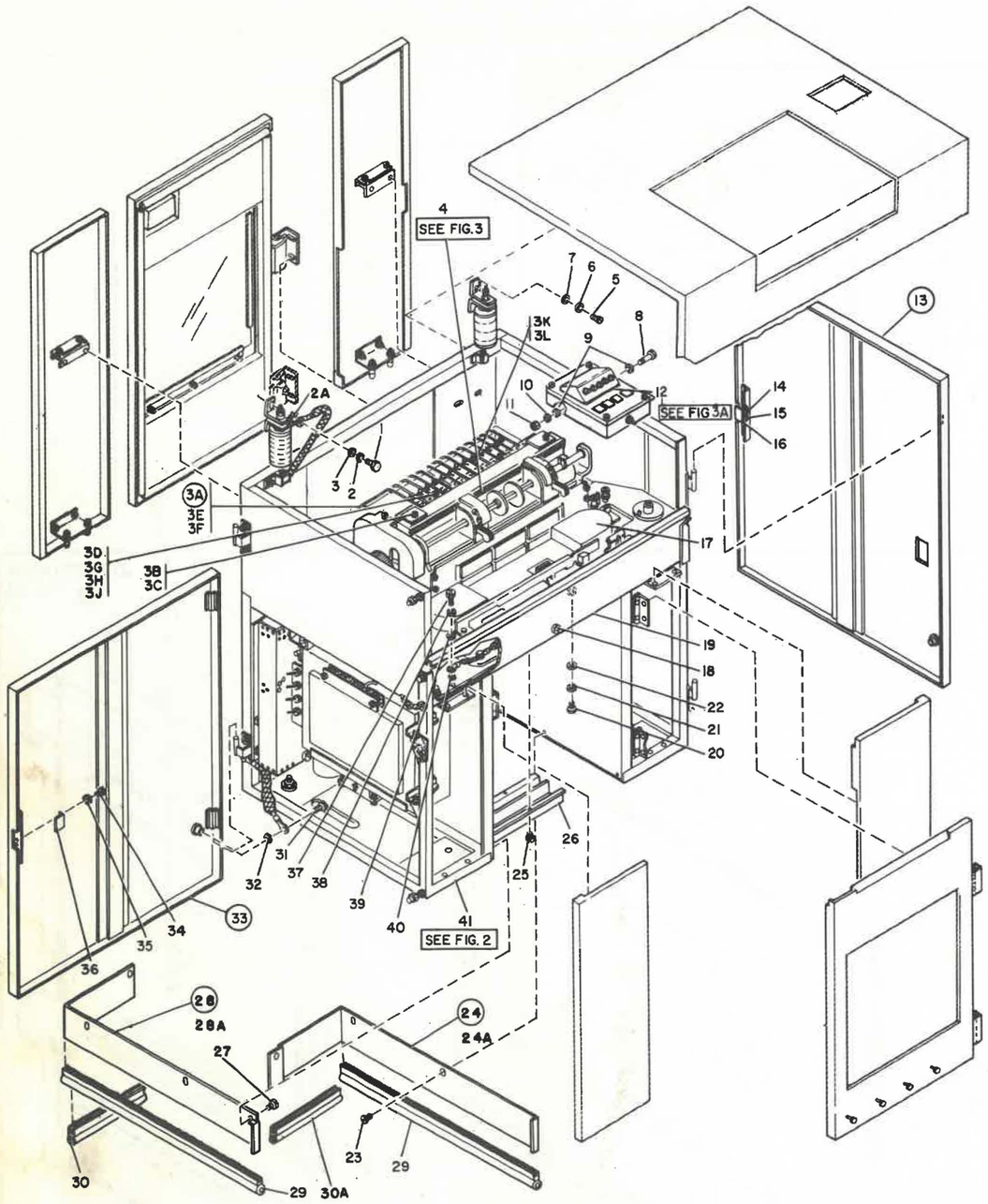

FIGURE 1. FINAL ASSEMBLY. SHEET 1 OF 5. INDEX NOS. 1-41 SEE LIST 1.

FINAL ASSEMBLY

FIGURE-INDEX NUMBER	PART NUMBER	UNITS PER ASM.	DESCRIPTION 1 2 3 4
1 -	4135002	1	FINAL ASSEMBLY,MODEL 1
-	1815100	1	FINAL ASSEMBLY,MODEL 2
			FOR ILLUSTRATION SEE FIGURE 1
- 1	120211	1	. SCREW,HEX HD- 10-32 X 0.500 LG
- 2	9092	1	. LOCKWASHER,SPLIT- 0.194 ID X 0.337 OD
- 2A	56079	1	. LOCKWASHER,EXT TEETH- 0.204 ID X 0.410 O
- 3	1940	1	. WASHER,FLAT- 0.192 ID X 0.562 OD
- 3A	5593466	1	. GUIDE ASM,UPPER
- 3B	34512	2	. SCREW,BD HD- 8-32 X 0.375 LG
- 3C	22478	2	. WASHER,FL- 0.170 ID X 0.375 OD
- 3D	119	2	. . SCREW,MACH FL CSK HD- 8-32 X 0.500 LG
- 3E	1815105	1	. . GUIDE,UPPER
- 3F	5593465	1	. . COVER
- 3G	22478	2	. . WASHER,FL- 0.170 ID X 0.375 OD
- 3H	1090873	2	. . LOCKWASHER,SPLIT- 0.168 ID X 0.296 OD
- 3J	257189	2	. . NUT,HEX- 8-32
- 3K	850248	1	. . TINSEL
- 3L	236849	2	. . SCREW,BD HD- 10-32 X 0.250 LG ATT PT
- 4	1808563	1	. MECHANISM FINAL ASSEMBLY,MODEL 1
			FOR DETAIL BREAKDOWN SEE FIGURE 3
- 4	1808564	1	. MECHANISM FINAL ASSEMBLY,MODEL 2
			FOR DETAIL BREAKDOWN SEE FIGURE 3
- 5	130434	3	. SCREW,SLOTTED HEX HD 10-32 X 0.375 LG
- 6	9092	3	. LOCKWASHER,SPLIT- 0.194 ID X 0.337 OD
- 7	1940	3	. WASHER,FLAT- 0.192 ID X 0.562 OD
- 8	36112	2	. SCREW,SLOTTED HEX HD- 1/4-20 X 1.500 LG
- 9	3550	4	. WASHER,FL- 0.250 ID X 0.562 OD
- 10	6935	2	. LOCKWASHER,SPLIT- 0.250 ID X 0.493 OD
- 11	36109	2	. NUT,HEX- 1/4-20
- 12	5593448	1	. OPERATOR PANEL
			FOR DETAIL BREAKDOWN SEE FIGURE 3A
- 13	4135007	1	. COVER ASM,BLUE
- 13	5576650	1	. COVER ASM,RED
- 13	5576652	1	. COVER ASM,GREY
- 13	5576654	1	. COVER ASM,YELLOW
- 14	58207	4	. . SCREW,BD HD- 8-32 X 0.250 LG
- 15	185116	4	. . WASHER
- 16	833697	2	. . STRIKE
- 17	5576666	1	. COVER ASM
- 18	637733	1	. SCREW,SEM HEX HD- 10-32 X 0.465 LG
- 19	4138367	1	. PLATE ASM
- 20	38686	4	. SCREW,HEX HD- 1/4-20 X 0.500 LG
- 21	6935	4	. LOCKWASHER,SPLIT- 0.250 ID X 0.493 OD
- 22	3550	4	. WASHER,FL- 0.250 ID X 0.562 OD
- 23	236849	4	. SCREW,BD HD- 10-32 X 0.250 LG
- 24	6808567	1	. SKIRT ASSEMBLY
- 24A	4134960	1	. SKIRT
- 25	332620	6	. SCREW,BD HD- 10-32 X 0.500 LG
- 26	1819764	1	. CHANNEL
- 27	236849	3	. SCREW,BD HD- 10-32 X 0.250 LG
- 28	6808568	1	. SKIRT ASSEMBLY
- 28A	4134959	1	. SKIRT
- 29	4138390	1	. SEAL
- 30	4138398	1	. SEAL
- 30A	6808566	1	. SEAL
- 31	236849	2	. SCREW,BD HD- 10-32 X 0.250 LG
- 32	56079	2	. LOCKWASHER,EXT TEETH- 0.204 ID X 0.410 O
- 33	4135007	2	. COVER ASM,BLUE
- 33	5576650	1	. COVER ASM,RED
- 33	5576652	1	. COVER ASM,GREY
- 33	5576654	1	. COVER ASM,YELLOW
- 34	58207	4	. . SCREW,BD HD- 8-32 X 0.250 LG
- 35	185116	4	. . WASHER
- 36	833697	2	. . STRIKE
- 37	120211	1	. SCREW,HEX HD- 10-32 X 0.500 LG
- 38	9092	1	. LOCKWASHER,SPLIT- 0.194 ID X 0.337 OD
- 39	1940	1	. WASHER,FLAT- 0.192 ID X 0.562 OD
- 40	56079	4	. LOCKWASHER,EXT TEETH- 0.20 ID X 0.41 OD
- 41	1815055	1	. LOWER STRUCTURE ASSEMBLY
			FOR DETAIL BREAKDOWN SEE FIGURE 2

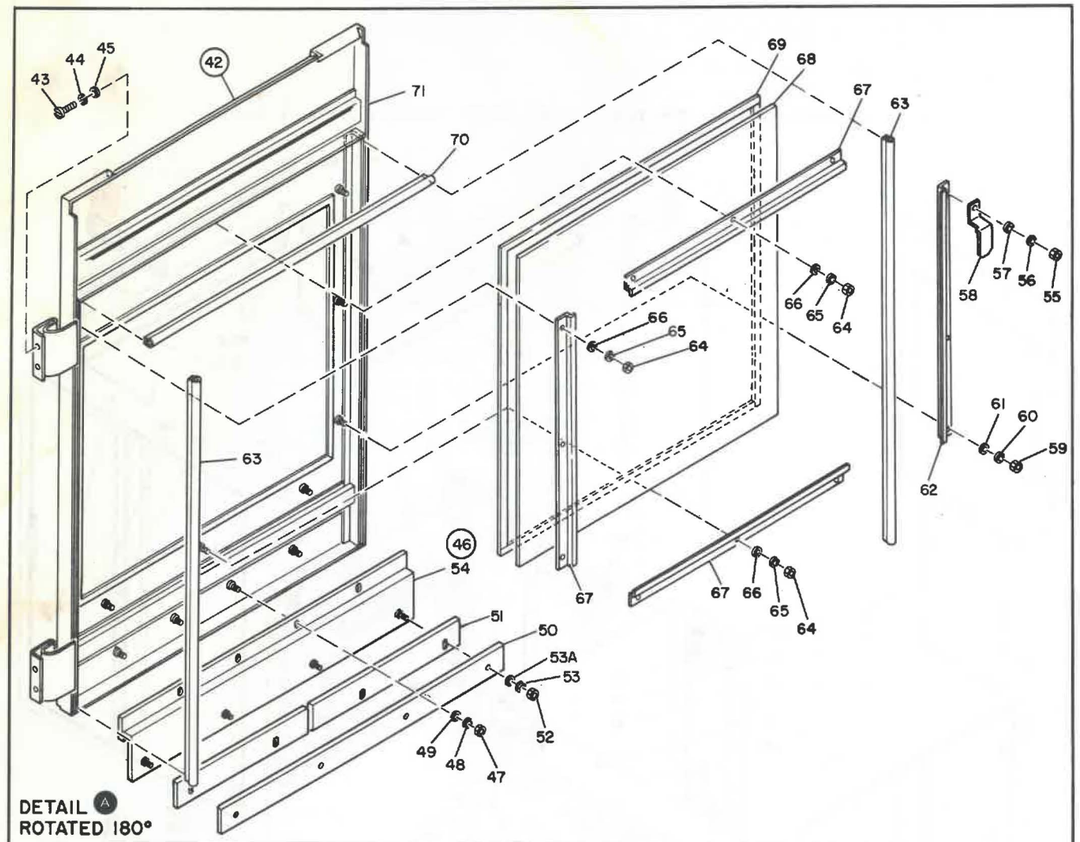

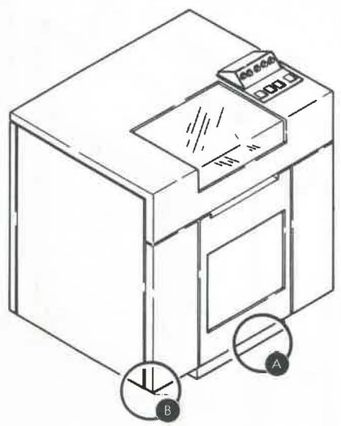

FRONT VIEW

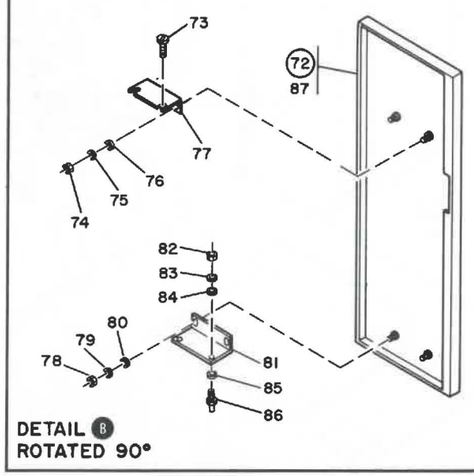

FIGURE 1. FINAL ASSEMBLY. SHEET 2 OF 5. INDEX NOS. 42-87SEE LIST 1.

FIGURE-INDEX NUMBER	PART NUMBER	UNITS PER ASM.	DESCRIPTION 1 2 3 4	
1 - 42	4138346	1	. DOOR ASM	
- 43	130434	4	. SCREW,SLOTTED HEX HD 10-32 X 0.375 LG	ATT PT
- 44	9092	4	. LOCKWASHER,SPLIT- 0.194 ID X 0.337 OD	ATT PT
- 45	1940	4	. WASHER,FLAT- 0.192 ID X 0.562 OD	ATT PT
- 46	6808569	1	. . SKIRT ASM	
- 47	11598	4	. . NUT,HEX- 10-32	ATT PT
- 48	9092	4	. . LOCKWASHER,SPLIT- 0.194 ID X 0.337 OD	ATT PT
- 49	1940	4	. . WASHER,FLAT- 0.192 ID X 0.562 OD	ATT PT
- 50	4135082	1	. . . PLATE	
- 51	4135127	2	. . . PAD	
- 52	11598	4	. . . NUT,HEX- 10-32	ATT PT
- 53	9092	4	. . . LOCKWASHER,SPLIT- 0.194 ID X 0.337 OD	ATT PT
- 53A	1940	4	. . . WASHER,FLAT- 0.192 ID X 0.562 OD	ATT PT
- 54	1819773	1	. . . BRACKET	
- 55	11598	1	. . NUT,HEX- 10-32	
- 56	1940	1	. . WASHER,FLAT- 0.192 ID X 0.562 OD	
- 57	9092	1	. . LOCKWASHER,SPLIT- 0.194 ID X 0.337 OD	
- 58	5576638	1	. . STRIKE	
- 59	11598	2	. . NUT,HEX- 10-32	
- 60	45690	2	. . WASHER,FL- 0.203 ID X 0.438 OD	
- 61	9092	2	. . LOCKWASHER,SPLIT- 0.194 ID X 0.337 OD	
- 62	4138349	1	. . CLAMP	
- 63	2526535	2	. . SEAL,72 INCHES LG	
- 64	11598	9	. . NUT,HEX- 10-32	
- 65	45690	9	. . WASHER,FL- 0.203 ID X 0.438 OD	
- 66	9092	9	. . LOCKWASHER,SPLIT- 0.194 ID X 0.337 OD	
- 67	4138349	3	. . CLAMP	
- 68	1815113	1	. . GLASS	
- 69	4138391	1	. . SEAL	
- 70	2526535	1	. . SEAL,72 INCHES LG	
- 71	4138347	1	. . DOOR	
- 72	557669	1	. COVER ASSEMBLY,LEFT FRONT	
- 73	32042	2	. SCREW,BD HD- 10-32 X 0.375 LG	ATT PT
- 74	11598	2	. . NUT,HEX- 10-32	
- 75	9092	2	. . LOCKWASHER,SPLIT- 0.194 ID X 0.337 OD	
- 76	1940	2	. . WASHER,FLAT- 0.192 ID X 0.562 OD	
- 77	4138371	1	. . BRACKET	
- 78	11598	2	. . NUT,HEX- 10-32	
- 79	9092	2	. . LOCKWASHER,SPLIT- 0.194 ID X 0.337 OD	
- 80	1940	2	. . WASHER,FLAT- 0.192 ID X 0.562 OD	
- 81	1819763	1	. . BRACKET	
- 82	11598	2	. . NUT,HEX- 10-32	
- 83	9092	2	. . LOCKWASHER,SPLIT- 0.194 ID X 0.337 OD	
- 84	1940	2	. . WASHER,FLAT- 0.192 ID X 0.562 OD	
- 85	1940	2	. . WASHER,FLAT- 0.192 ID X 0.562 OD	
- 86	474405	2	. . PIN	
- 87	1815117	1	. . COVER	

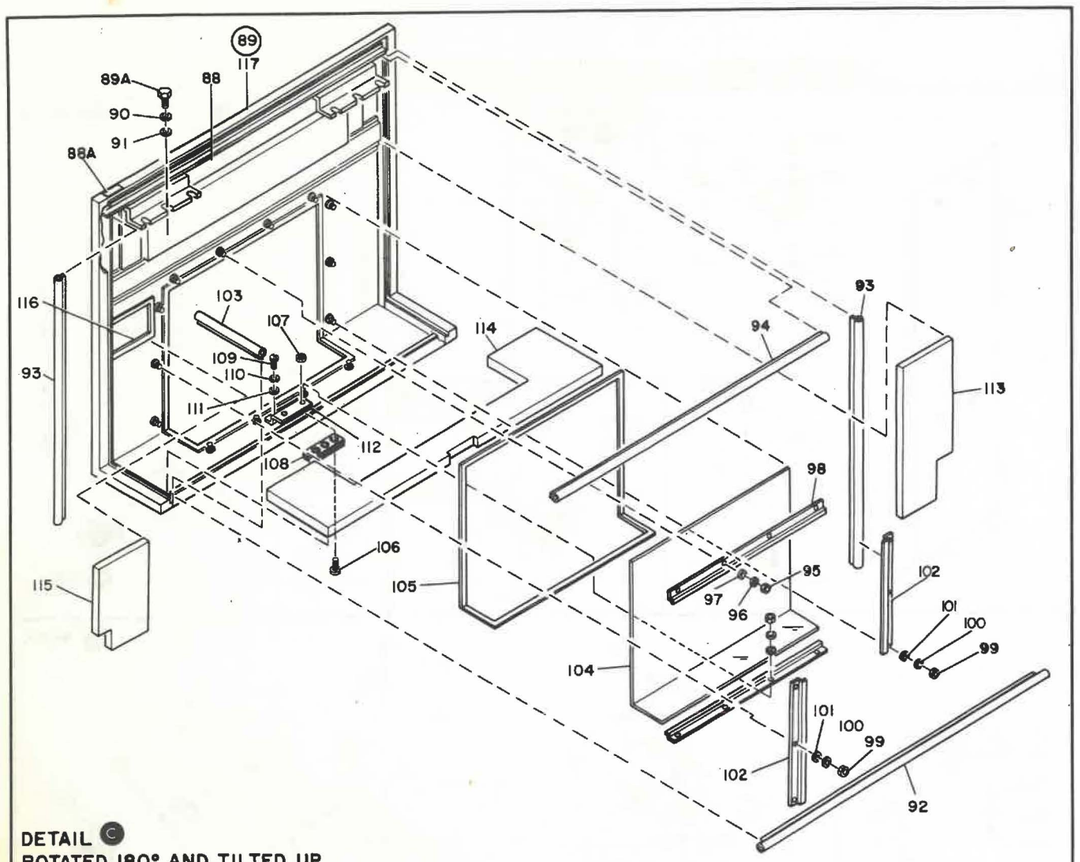

DETAIL C
ROTATED 180° AND TILTED UP

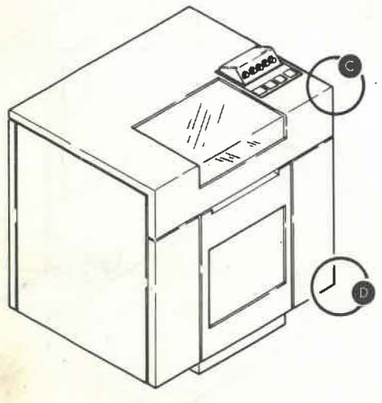

FRONT VIEW

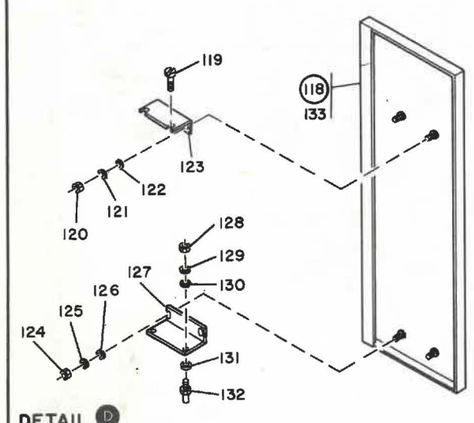

DETAIL D
ROTATED 90°

FIGURE 1. FINAL ASSEMBLY. SHEET 3 OF 5. INDEX NOS. 88-133. SEE LIST 1.

FIGURE-INDEX NUMBER	PART NUMBER	UNITS PER ASM.	DESCRIPTION 1 2 3 4	
1 - 88	8330332	1	. PAD	
- 88A	911932	1	. LABEL	
- 89	4138339	1	. COVER ASM,TOP	ATT PT
- 89A	38686	6	. SCREW,HEX HD- 1/4-20 X 0.500 LG	ATT PT
- 90	6935	6	. LOCKWASHER,SPLIT- 0.250 ID X 0.493 OD	ATT PT
- 91	3550	6	. WASHER,FL- 0.250 ID X 0.562 OD	ATT PT
- 92	2526535	2	. . SEAL,72 INCHES LG	
- 93	2526535	2	. . SEAL,72 INCHES LG	
- 94	2526535	2	. . SEAL,72 INCHES LG	
- 95	11598	8	. . NUT,HEX- 10-32	
- 96	9092	8	. . LOCKWASHER,SPLIT- 0.194 ID X 0.337 OD	
- 97	45690	8	. . WASHER,FL- 0.203 ID X 0.438 OD	
- 98	4138394	2	. . CLAMP	
- 99	11598	6	. . NUT,HEX- 10-32	
-100	9092	6	. . LOCKWASHER,SPLIT- 0.194 ID X 0.337 OD	
-101	45690	6	. . WASHER,FL- 0.203 ID X 0.438 OD	
-102	4138345	2	. . CLAMP	
-103	2526535	2	. . SEAL,72 INCHES IG	
-104	4138341	1	. . GLASS	
-105	4138391	1	. . SEAL	
-106	438552	2	. . SCREW,MACH BD HD- 4-40 X 0.750 LG	
-107	37913	2	. . NUT,HEX- 0.375-16	
-108	848876	1	. . LATCH ASM,COVER	
-109	32042	2	. . SCREW,BD HD- 10-32 X 0.375 LG	
-110	9092	2	. . LOCKWASHER,SPLIT- 0.194 ID X 0.337 OD	
-111	45690	2	. . WASHER,FL- 0.203 ID X 0.438 OD	
-112	6808521	1	. . BRACKET ASM	
-113	4138344	1	. . CHANNEL	
-114	4138342	1	. . CHANNEL	
-115	4138343	1	. . MAT	
-116	6808599	1	. . SEAL	
-117	4138340	1	. . COVER	
-118	5576670	1	. COVER ASM,RIGHT FRONT	
-119	32042	2	. SCREW,BD HD- 10-32 X 0.375 LG	ATT PT
-120	11598	2	. . NUT,HEX- 10-32	
-121	9092	2	. . LOCKWASHER,SPLIT- 0.194 ID X 0.337 OD	
-122	1940	2	. . WASHER,FLAT- 0.192 ID X 0.562 OD	
-123	4138371	1	. . BRACKET	
-124	11598	2	. . NUT,HEX- 10-32	
-125	9092	2	. . LOCKWASHER,SPLIT- 0.194 ID X 0.337 OD	
-126	1940	2	. . WASHER,FLAT- 0.192 ID X 0.562 CD	
-127	1819763	1	. . BRACKET	
-128	11598	2	. . NUT,HEX- 10-32	
-129	9092	2	. . LOCKWASHER,SPLIT- 0.194 ID X 0.337 OD	
-130	1940	2	. . WASHER,FLAT- 0.192 ID X 0.562 OD	
-131	1940	2	. . WASHER,FLAT- 0.192 ID X 0.562 OD	
-132	474405	2	. . PIN	
-133	1815119	1	. . COVER	

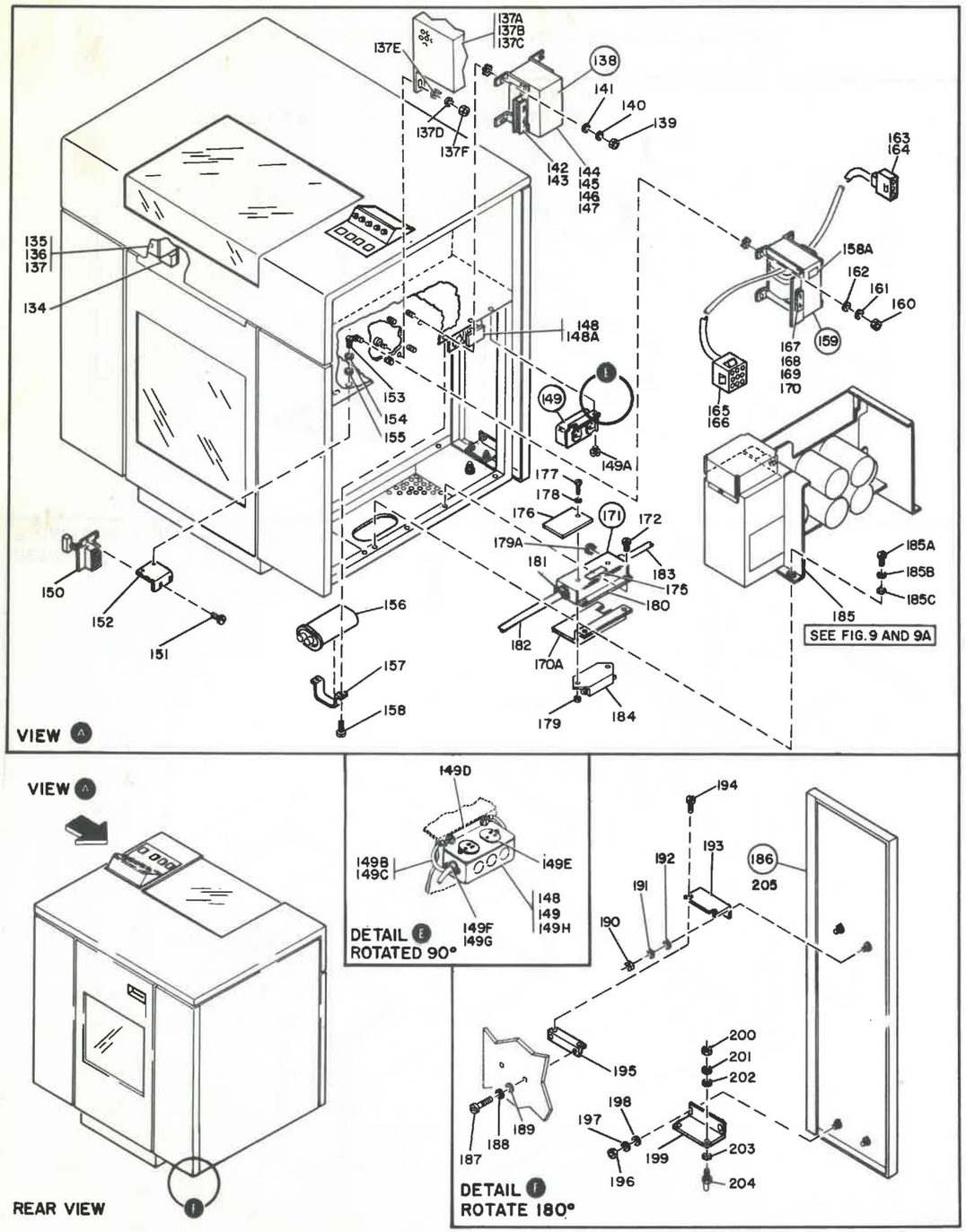

FIGURE 1. FINAL ASSEMBLY. SHEET 4 OF 5. INDEX NOS. 134-205. SEE LIST 1.

FIGURE-INDEX NUMBER	PART NUMBER	UNITS PER ASM.	DESCRIPTION 1 2 3 4	
1 -134	5576696	1	. STRIKE	
-135	38381	2	. SCREW,FIL HD- 10-32 X 0.312 LG	
-136	9092	2	. LOCKWASHER,SPLIT- 0.194 ID X 0.337 OD	
-137	1940	2	. WASHER,FLAT- 0.192 ID X 0.562 OD	
-137A	6808593	1	. COVER ASM	
-137B	2180701	1	. SCREW	ATT PT
-137C	130434	2	. SCREW,SLOTTED HEX HD 10-32 X 0.375 LG	ATT PT
-137D	9092	3	. LOCKWASHER,SPLIT- 0.194 ID X 0.337 OD	ATT PT
-137E	1940	3	. WASHER,FLAT- 0.192 ID X 0.562 OD	ATT PT
-137F	11598	1	. NUT,HEX- 10-32	ATT PT
-138	6808516	1	. TRANSFORMER ASM- 50/60 HZ	
-138	6808585	1	. TRANSFORMER ASM- 50 HZ	
-139	11598	4	. NUT,HEX- 10-32	ATT PT
-140	9092	4	. LOCKWASHER,SPLIT- 0.194 ID X 0.337 OD	ATT PT
-140A	56079	1	. LOCKWASHER,EXT TEETH- 0.204 ID X 0.410 O	ATT PT
-141	1940	4	. WASHER,FLAT- 0.192 ID X 0.562 OD	ATT PT
-142	10170	2	. . SCREW,BD HD- 6-32 X 0.250 LG	
-143	337193	1	. . SHIELD,TERMINAL BOARD 6 POSITION	
-144	322550	2	. . SCREW,BD HD- 6-32 X 0.500 LG	
-145	322266	1	. . STRIP,MARKER,6 POS NOS.	
-146	317131	1	. . BLOCK	
-147	210883	2	. . STUD	
-148	6808579	1	. BRACKET ASM	
-148A	332620	2	. SCREW,BD HD- 10-32 X 0.500 LG	ATT PT
-149	5576641	1	. OUTLET ASM	ATT PT
-149A	332620	2	. SCREW,BD HD- 10-32 X 0.500 LG	ATT PT
-149B	1993977	1	. . JUMPER ASM	
-149C	236849	2	. . SCREW,BD HD- 10-32 X 0.250 LG	
-149D	4703239	1	. . BRACKET	
-149E	357995	1	. . OUTLET,CONV 115V 60 HZ	
-149F	151596	1	. . CLAMP	
-149G	38443	2	. . SCREW,FL CSK HD- 6-32 X 0.312 LG	
-149H	1993937	1	. . JUMPER ASM	
-150	4138327	1	. SWITCH ASM	
-151	236849	2	. SCREW,BD HD- 10-32 X 0.250 LG	
-152	5576642	1	. BRACKET	
-153	130434	2	. SCREW,SLOTTED HEX HD 10-32 X 0.375 LG	ATT PT
-154	9092	2	. LOCKWASHER,SPLIT- 0.194 ID X 0.337 OD	ATT PT
-155	1940	2	. WASHER,FLAT- 0.192 ID X 0.562 OD	ATT PT
-156	5252841	1	. CAPACITOR	
-157	1145820	1	. BRACKET	
-158	5644	2	. SCREW,FL HD- 6-32 X 0.625 LG	ATT PT
-158A	2582954	1	. LABEL	
-159	5593446	1	. TRANSFORMER ASM,FERRO- 60 HZ	
-159	4119618	1	. TRANSFORMER ASM,FERRO- 50 HZ	
-160	11598	4	. NUT,HEX- 10-32	ATT PT
-161	9092	4	. LOCKWASHER,SPLIT- 0.194 ID X 0.337 OD	ATT PT
-161A	56079	1	. LOCKWASHER,EXT TEETH- 0.204 ID X 0.410 O	ATT PT
-162	1940	4	. WASHER,FLAT- 0.192 ID X 0.562 OD	ATT PT
-163	1847536	1	. . CONNECTOR,15 POSITION	
-164	1471028	3	. . CONTACT	
-165	1847532	1	. . CONNECTOR	
-166	1471028	6	. . CONTACT	
-167	322550	2	. . SCREW,BD HD- 6-32 X 0.500 LG	
-168	740554	1	. . STRIP	
-169	317310	1	. . BLOCK,5 DBL SCREW TERMINAL	
-170	210883	2	. . STUD	
-170A	4703256	1	. PLATE ASM	
-171	5576677	1	. LINE FILTER ASM 60HZ	
-171	6808547	1	. LINE FILTER ASM 60 HZ 6 FOOT CORD	
-171	5576679	1	. LINE FILTER ASM 50HZ	
-172	34512	2	. SCREW,BD HD- 8-32 X 0.375 LG	ATT PT
-175	183755	1	. . LABEL	
-176	4703232	1	. . PLATE	
-177	186758	2	. . SCREW,BD HD- 8-32 X 0.437 LG	
-178	1090873	2	. . LOCKWASHER,SPLIT- 0.168 ID X 0.296 OD	
-179	257189	2	. . NUT,HEX- 8-32	
-179A	850065	1	. . PLUG BUTTON-USED ON 6808547 FILTER ASM	
-180	5576663	1	. . COVER,FILTER	
-181	151598	2	. . CLAMP	
-182	4138338	1	. . CABLE ASM 50-60HZ FOR COMPONENT PARTS SEE FIGURE 12	
-183	1819739	1	. . CABLE ASM 60HZ FOR COMPONENT PARTS SEE FIGURE 12	
-183	4135130	1	. . CABLE ASM 60 HZ-USED ON 6808547 FILTER FOR COMPONENT PARTS SEE FIGURE 12	
-183	5576678	1	. . CABLE ASM 50HZ	

FIGURE-INDEX NUMBER	PART NUMBER	UNITS PER ASM.	DESCRIPTION 1 2 3 4	
1			FOR COMPONENT PARTS SEE FIGURE 12	
-184	1862655	1	. . FILTER	
-185	4138414	1	. TRI-LEVEL POWER SUPPLY ASM 60HZ	
-185	4138420	1	. TRI-LEVEL POWER SUPPLY ASM 50HZ	
			FOR DETAIL BREAKDOWN SEE FIGURE 9	
-185	5593470	1	. TRI-LEVEL POWER SUPPLY 50/60 HZ	
			FOR DETAIL BREAKDOWN SEE FIGURE 9A	
-185A	38686		. SCREW,HEX HD- 1/4-20 X 0.500 LG	
-185B	6935		. LOCKWASHER,SPLIT- 0.250 ID X 0.493 OD	
-185C	3550		. WASHER,FL- 0.250 ID X 0.562 OD	
-186	5576671	1	. COVER ASM	
-187	130434	2	. SCREW,SLOTTED HEX HD 10-32 X 0.375 LG	ATT PT
-188	9092	2	. LOCKWASHER,SPLIT- 0.194 ID X 0.337 OD	ATT PT
-189	1940	2	. WASHER,FLAT- 0.192 ID X 0.562 OD	ATT PT
-190	11598	2	. . NUT,HEX- 10-32	
-191	9098	2	. . LOCK WASHER	
-192	1940	2	. . WASHER,FLAT- 0.192 ID X 0.562 OD	
-193	4138371	1	. . BRACKET	
-194	32042	2	. . SCREW,BD HD- 10-32 X 0.375 LG	
-195	4138372	1	. . BRACKET	
-196	11598	2	. . NUT,HEX- 10-32	
-197	9092	2	. . LOCKWASHER,SPLIT- 0.194 ID X 0.337 OD	
-198	1940	2	. . WASHER,FLAT- 0.192 ID X 0.562 OD	
-199	1819763	1	. . BRACKET	
-200	11598	2	. . NUT,HEX- 10-32	
-201	9092	2	. . LOCKWASHER,SPLIT- 0.194 ID X 0.337 OD	
-202	1940	2	. . WASHER,FLAT- 0.192 ID X 0.562 OD	
-203	1940	2	. . WASHER,FLAT- 0.192 ID X 0.562 OD	
-204	474405	2	. . PIN	
-205	4138355	1	. . COVER	

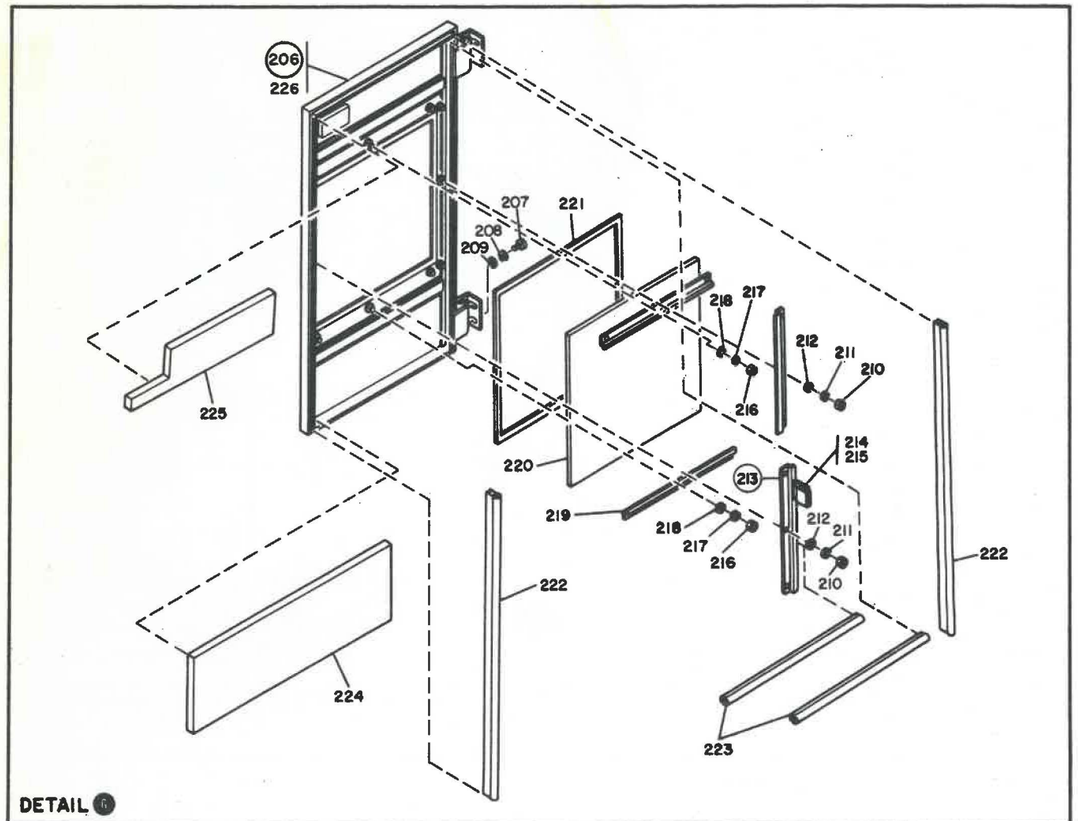

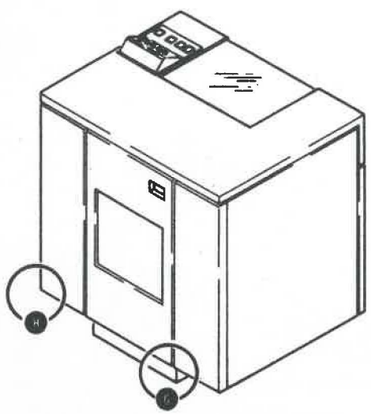

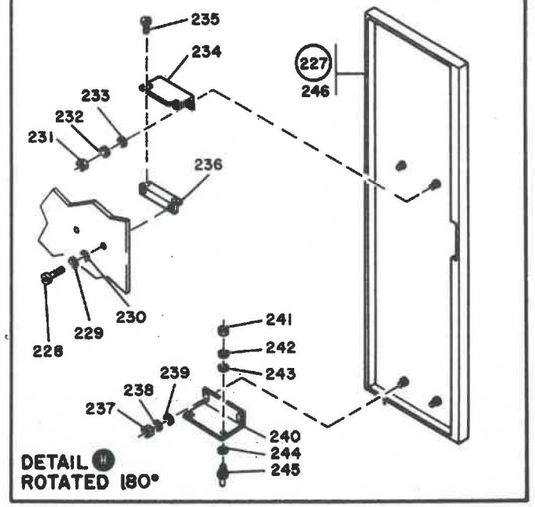

FIGURE 1. FINAL ASSEMBLY. SHEET 5 OF 5. INDEX NOS. 206-246. SEE LIST 1.

FIGURE-INDEX NUMBER	PART NUMBER	UNITS PER ASM.	DESCRIPTION 1 2 3 4	
1 -206	4138353	1	. DOOR ASM	
-207	130434	4	. SCREW,SLOTTED HEX HD 10-32 X 0.375 LG	ATT PT
-208	9092	4	. LOCKWASHER,SPLIT- 0.194 ID X 0.337 OD	ATT PT
-209	1940	4	. WASHER,FLAT- 0.192 ID X 0.562 OD	ATT PT
-210	11598	3	. . NUT,HEX- 10-32	
-211	9092	3	. . LOCKWASHER,SPLIT- 0.194 ID X 0.337 OD	
-212	45690	3	. . WASHER,FL- 0.203 ID X 0.438 OD	
-213	4138350	1	. . CLAMP ASM	
-214	113288	2	. . . SCREW	
-215	848876	1	. . . LATCH ASM,COVER	
-216	11598	9	. . NUT,HEX- 10-32	
-217	9092	9	. . LOCKWASHER,SPLIT- 0.194 ID X 0.337 OD	
-218	45690	9	. . WASHER,FL- 0.203 ID X 0.438 OD	
-219	4138349	1	. . CLAMP	
-220	1815113	1	. . GLASS	
-221	4138391	1	. . SEAL	
-222	2526535	1	. . SEAL,72 INCHES LG	
-223	2526535	2	. . SEAL,72 INCHES LG	
-224	4138352	1	. . MAT	
-225	4138351	1	. . MAT	
-226	4138348	1	. . DOOR	
-227	5576672	1	. COVER ASM,LEFT REAR	
-228	130434	2	. SCREW,SLOTTED HEX HD 10-32 X 0.375 LG	ATT PT
-229	9092	2	. LOCKWASHER,SPLIT- 0.194 ID X 0.337 OD	ATT PT
-230	1940	2	. WASHER,FLAT- 0.192 ID X 0.562 OD	ATT PT
-231	11598	2	. . NUT,HEX- 10-32	
-232	9092	2	. . LOCKWASHER,SPLIT- 0.194 ID X 0.337 OD	
-233	1940	2	. . WASHER,FLAT- 0.192 ID X 0.562 OD	
-234	4138371	1	. . BRACKET	
-235	32042	2	. . SCREW,BD HD- 10-32 X 0.375 LG	
-236	4138372	1	. . BRACKET	
-237	11598	2	. . NUT,HEX- 10-32	
-238	9092	2	. . LOCKWASHER,SPLIT- 0.194 ID X 0.337 OD	
-239	1940	2	. . WASHER,FLAT- 0.192 ID X 0.562 OD	
-240	1819763	1	. . BRACKET	
-241	11598	2	. . NUT,HEX- 10-32	
-242	9092	2	. . LOCKWASHER,SPLIT- 0.194 ID X 0.337 OD	
-243	1940	2	. . WASHER,FLAT- 0.192 ID X 0.562 OD	
-244	1940	2	. . WASHER,FLAT- 0.192 ID X 0.562 OD	
-245	474405	2	. . PIN	
-246	4138355	1	. . COVER	

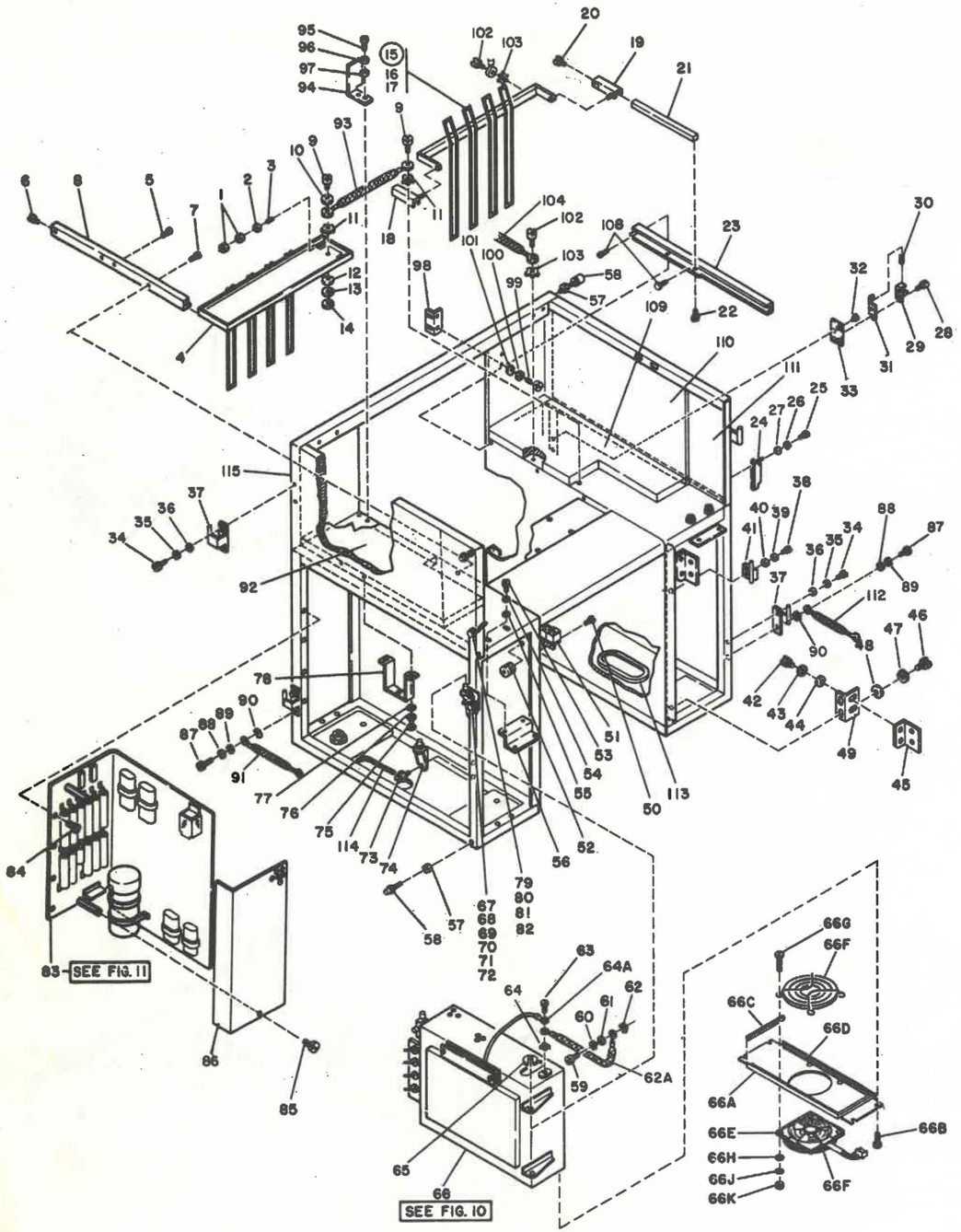

FIGURE 2. LOWER STRUCTURE ASSEMBLY. SHEET 1 OF 2. INDEX NOS. 1-115. SEE LIST 2.

LOWER STRUCTURE ASSEMBLY

FIGURE-INDEX NUMBER	PART NUMBER	UNITS PER ASM.	DESCRIPTION 1 2 3 4	
2 -	1815055	REF	LOWER STRUCTURE ASSEMBLY FOR NEXT HIGHER ASSEMBLY SEE FIGURE 1-115 FOR ILLUSTRATION SEE FIGURE 2	
- 1	11598	4	. NUT,HEX- 10-32	ATT PT
- 2	324	2	. WASHER,FL- 0.193 ID X 0.750 OD	ATT PT
- 3	736860	2	. SPRING	
- 4	1819767	1	. FRONT GUIDE ASM	
- 5	104763	2	. SCREW,CAP,SOC HD- 10-32 X 1/2 LG	ATT PT
- 6	58207	2	. SCREW,BD HD- 8-32 X 0.250 LG	ATT PT
- 7	236849	3	. SCREW,BD HD- 10-32 X 0.250 LG	ATT PT
- 8	4134996	1	. LEFT GUIDE	
- 9	32042	2	. SCREW,BD HD- 10-32 X 0.375 LG	
- 10	45690	1	. WASHER,FL- 0.203 ID X 0.438 OD	
- 11	56079	2	. LOCKWASHER,EXT TEETH- 0.204 ID X 0.410 O	
- 12	45690	1	. WASHER,FL- 0.203 ID X 0.438 OD	
- 13	9092	1	. LOCKWASHER,SPLIT- 0.194 ID X 0.337 OD	
- 14	11598	1	. NUT,HEX- 10-32	
- 15	5576616	1	. REAR GUIDE ASM	
- 16	222696	2	. BEARING	
- 17	4134987	1	. GUIDE	
- 18	4134990	1	. LEFT CHANNEL ASM	
- 19	4134991	1	. RIGHT CHANNEL ASM	
- 20	34512	6	. SCREW,BD HD- 8-32 X 0.375 LG	ATT PT
- 21	4134992	2	. RAIL	
- 22	236849	3	. SCREW,BD HD- 10-32 X 0.250 LG	
- 23	4134995	1	. RIGHT GUIDE	
- 24	4138365	1	. BRACKET	
- 25	130434	2	. SCREW,SLOTTED HEX HD 10-32 X 0.375 LG	ATT PT
- 26	9092	2	. LOCKWASHER,SPLIT- 0.194 ID X 0.337 OD	ATT PT
- 27	1940	2	. WASHER,FLAT- 0.192 ID X 0.562 OD	ATT PT
- 28	833616	2	. STUD	
- 29	833618	1	. LATCH	
- 30	214438	1	. SPRING	
- 31	833617	1	. BRACKET	
- 32	236849	2	. SCREW,BD HD- 10-32 X 0.250 LG	ATT PT
- 33	853634	1	. PLATE	
- 34	130434	6	. SCREW,HEX HD- 10-32 X 0.375 LG	ATT PT
- 35	9092	6	. LOCKWASHER,SPLIT- 0.194 ID X 0.337 OD	ATT PT
- 36	1940	6	. WASHER,FLAT- 0.192 ID X 0.562 OD	ATT PT
- 37	1819762	4	. HINGE	
- 38	130434	2	. SCREW,HEX HD- 10-32 X 0.375 LG	ATT PT
- 39	9092	2	. LOCKWASHER,SPLIT- 0.194 ID X 0.337 OD	ATT PT
- 40	1940	2	. WASHER,FLAT- 0.192 ID X 0.562 OD	ATT PT
- 41	4135028	1	. STOP	
- 42	130434	6	. SCREW,HEX HD- 10-32 X 0.375 LG	ATT PT
- 43	9092	6	. LOCKWASHER,SPLIT- 0.194 ID X 0.337 OD	ATT PT
- 44	1940	6	. WASHER,FLAT- 0.192 ID X 0.562 OD	ATT PT
- 45	1819771	3	. BRACKET	
- 46	130434	6	. SCREW,HEX HD- 10-32 X 0.375 LG	ATT PT
- 47	9092	6	. LOCKWASHER,SPLIT- 0.194 ID X 0.337 OD	ATT PT
- 48	1940	6	. WASHER,FLAT- 0.192 ID X 0.562 OD	ATT PT
- 49	1819770	3	. BRACKET	
- 50	10170	2	. SCREW,BD HD- 6-32 X 0.250 LG	ATT PT
- 51	2132050	1	. LATCH	
- 52	317227	1	. GROMMET	
- 53	130434	3	. SCREW,HEX HD- 10-32 X 0.375 LG	ATT PT
- 54	9092	3	. LOCKWASHER,SPLIT- 0.194 ID X 0.337 OD	ATT PT
- 55	1940	3	. WASHER,FLAT- 0.192 ID X 0.562 OD	ATT PT
- 56	4138370	1	. BRACKET	
- 57	3960	4	. NUT,HEX- 1/4-20	
- 58	255939	4	. SCREW ASM,DOOR	
- 59	120211	1	. SCREW,HEX HD- 10-32 X 0.500 LG	
- 60	9092	1	. LOCKWASHER,SPLIT- 0.194 ID X 0.337 OD	
- 61	1940	1	. WASHER,FLAT- 0.192 ID X 0.562 OD	
- 62	56079	1	. LOCKWASHER,EXT TEETH- 0.204 ID X 0.410 O	
- 62A	518611	1	. JUMPER ASM	
- 63	34512	1	. SCREW,BD HD- 8-32 X 0.375 LG	
- 64	55901	1	. LOCKWASHER,EXT TEETH- 0.176 ID X .381 OD	
- 64A	5733161	1	. JUMPER	
- 65	251759	2	. RING,RET- 0.480 ID X 0.940 OD	ATT PT
- 66	1819740	1	. LOGIC CHASSIS ASSEMBLY FOR DETAIL BREAKDOWN SEE FIGURE 10	
- 66A	4135081	1	. PLATE	
- 66B	58207	2	. SCREW,BD HD- 8-32 X 0.250 LG	ATT PT
- 66C	599557	2	. SEAL	
- 66D	599557	2	. SEAL	
- 66E	4703241	1	. FAN,208/230V 50/60HZ AND 220/235V 50/60HZ	
- 66F	4703240	1	. FAN,200V 50/60HZ	

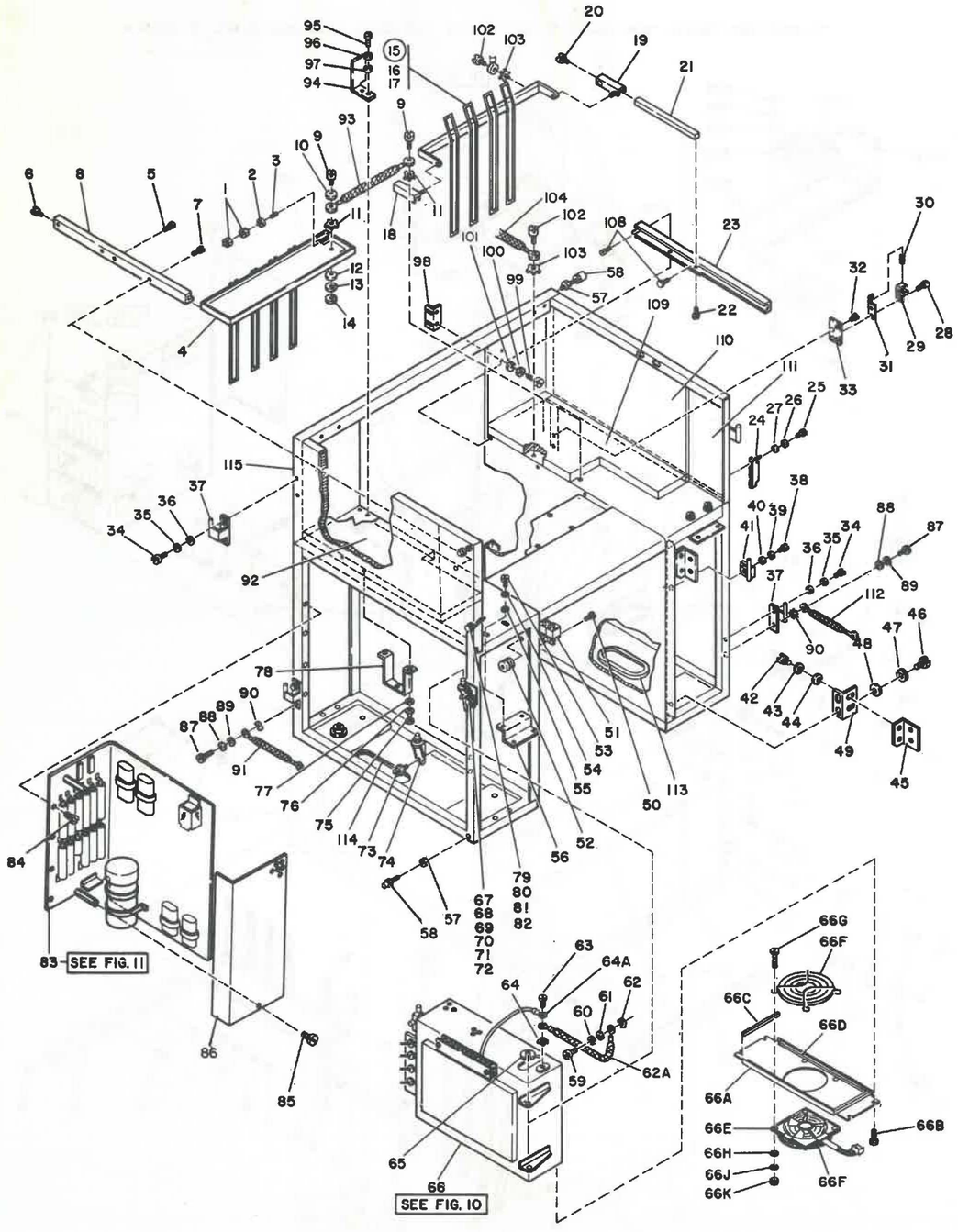

FIGURE 2. LOWER STRUCTURE ASSEMBLY. SHEET 1 OF 2. INDEX NOS. 1-115. SEE LIST 2.

LOWER STRUCTURE ASSEMBLY

FIGURE-INDEX NUMBER	PART NUMBER	UNITS PER ASM.	DESCRIPTION 1 2 3 4	
2				
- 66F	2172166	2	. GUARD	
- 66G	322555	4	. SCREW,MACH RH 6-32 X 2-1/4 LG	
- 66H	257986	4	. WASHER,FL- 0.156 ID X 0.312 OD	
- 66J	6364	4	. LOCKWASHER,SPLIT- 0.141 ID X 0.253 OD	
- 66K	257187	4	. NUT,HEX- 6-32	
- 67	833616	2	. STUD	
- 68	214438	1	. SPRING	
- 69	833618	1	. LATCH	
- 70	833617	1	. BRACKET	
- 71	236849	2	. SCREW,BD HD- 10-32 X 0.250 LG	
- 72	853634	1	. PLATE	
- 73	38686	4	. SCREW,HEX HD- 1/4-20 X 0.500 LG	ATT PT
- 74	225532	2	. HINGE ASM	
- 75	130434	2	. SCREW,HEX HD- 10-32 X 0.375 LG	ATT PT
- 76	9092	2	. LOCKWASHER,SPLIT- 0.194 ID X 0.337 OD	ATT PT
- 77	1940	2	. WASHER,FLAT- 0.192 ID X 0.562 OD	ATT PT
- 78	4135083	1	. BRACKET	
- 79	130434	1	. SCREW,HEX HD- 10-32 X 0.375 LG	ATT PT
- 80	9092	1	. LOCKWASHER,SPLIT- 0.194 ID X 0.337 OD	ATT PT
- 81	1940	1	. WASHER,FLAT- 0.192 ID X 0.562 OD	ATT PT
- 82	4138364	1	. BRACKET	
- 83	1819731	1	. POWER PLATE ASSEMBLY FOR DETAIL BREAKDOWN SEE FIGURE 11	
- 84	32042	4	. SCREW,BD HD- 10-32 X 0.375 LG	ATT PT
- 85	34512	2	. SCREW,BD HD- 8-32 X 0.375 LG	
- 86	1819733	1	. COVER	
- 87	120211	2	. SCREW,HEX HD- 10-32 X 0.500 LG	
- 88	9092	2	. LOCKWASHER,SPLIT- 0.194 ID X 0.337 OD	
- 89	1940	2	. WASHER,FLAT- 0.192 ID X 0.562 OD	
- 90	56079	2	. LOCKWASHER,EXT TEETH- 0.204 ID X 0.410 O	
- 91	856575	1	. JUMPER ASM	
- 92	4138396	1	. PAD	
- 93	523022	1	. JUMPER ASM	
- 94	5576637	1	. STRIKE	
- 95	130434	2	. SCREW,SLOTTED HEX HD 10-32 X 0.375 LG	ATT PT
- 96	9092	2	. LOCKWASHER,SPLIT- 0.194 ID X 0.337 OD	ATT PT
- 97	1940	2	. WASHER,FLAT- 0.192 ID X 0.562 OD	ATT PT
- 98	5593418	1	. BRACKET	
- 99	130434	2	. SCREW,SLOTTED HEX HD 10-32 X 0.375 LG	
-100	9092	2	. LOCKWASHER,SPLIT- 0.194 ID X 0.337 OD	
-101	28692	2	. WASHER,FLAT- 0.196 ID X 1.00 OD	
-102	58207	2	. SCREW,BD HD- 8-32 X 0.250 LG	
-103	55901	2	. LOCKWASHER,EXT TEETH- 0.176 ID X .381 OD	
-104	676748	1	. JUMPER ASM	
-106	55901	1	. WASHER	
-107	255939	1	. SCREW ASM,DOOR	
-108	236849	3	. SCREW	
-109	4138397	AR	. PAD	
-109	5593464	AR	. PAD	
-110	4138389	1	. PAD	
-111	5576640	2	. PAD	
-112	856575	1	. JUMPER ASM	
-113	350830	AR	. CHANNEL	
-114	350830	AR	. CHANNEL	
-115	4138326	1	. FRAME ASM	

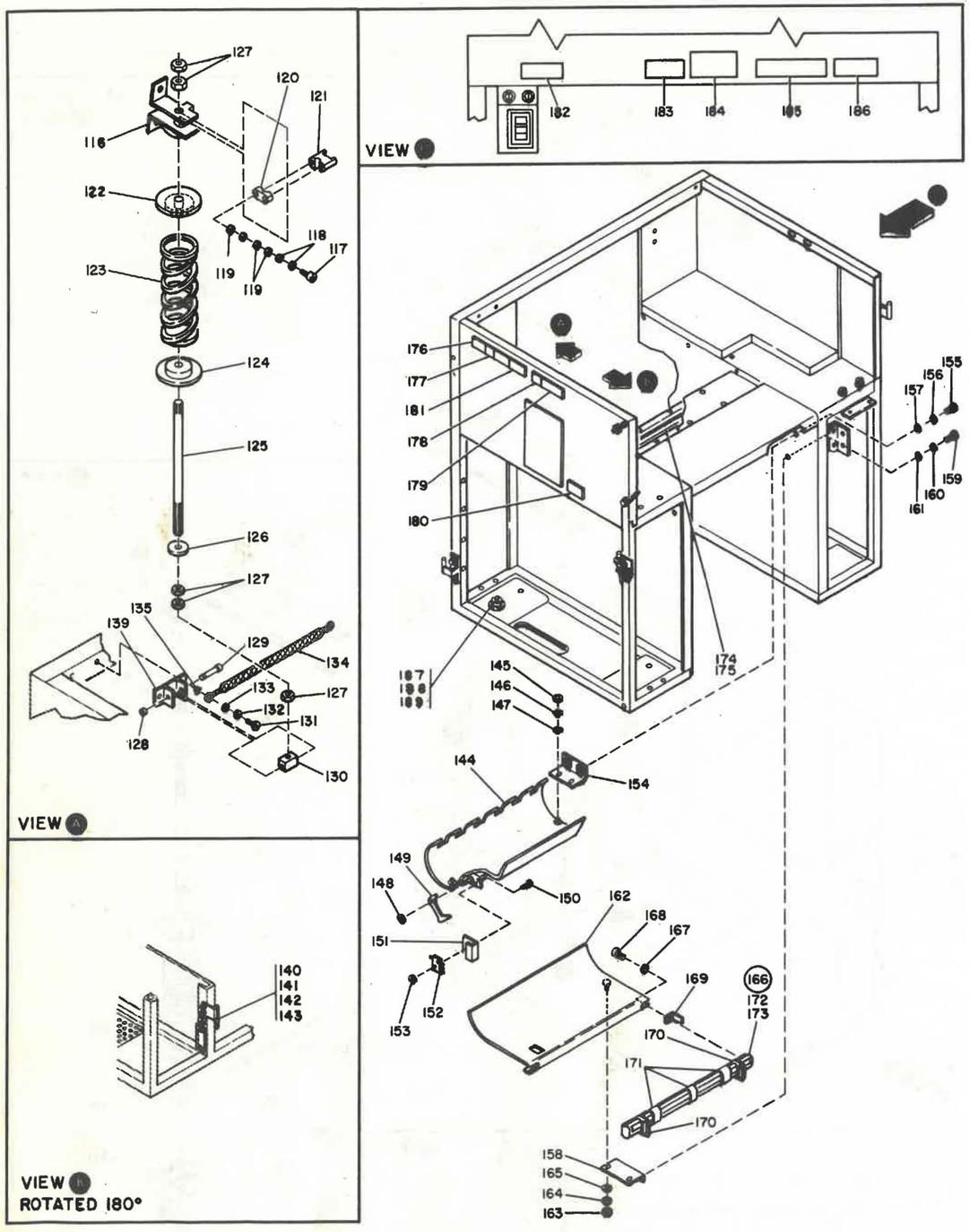

FIGURE 2. LOWER STRUCTURE ASSEMBLY. SHEET 2 OF 2. INDEX NOS. 116-189. SEE LIST 2.

FIGURE-INDEX NUMBER	PART NUMBER	UNITS PER ASM.	DESCRIPTION 1 2 3 4	
2				
-116	5576635	2	. BRACKET	
-117	332560	4	. SCREW,CAP SOC HD- 8-32 X 1.250 LG	
-118	45671	4	. WASHER	
-119	4253783	4	. WASHER	
-120	5576626	2	. BRAKE	
-121	5576627	2	. BRAKE	
-122	5576630	2	. GUIDE	
-123	5576629	2	. SPRING	
-124	5576630	2	. GUIDE	
-125	5576631	2	. SHAFT	
-126	154214	2	. WASHER,FL 21/64 ID X 1.000 OD X 3/32 THK	
-127	4564	10	. NUT,HEX- 5/16-18	
-128	257982	2	. CLIP,RETAINING E-TYPE	
-129	4253332	2	. STUD	
-130	4253789	2	. PIVOT BRACKET	
-131	55711	4	. SCREW,MACH HEX HD- 10-32 X 0.562 LG	
-132	9092	4	. LOCKWASHER,SPLIT- 0.194 ID X 0.337 OD	
-133	1940	4	. WASHER,FLAT- 0.192 ID X 0.562 OD	
-134	253425	1	. JUMPER	
-135	56079	1	. LOCKWASHER,EXT TEETH- 0.204 ID X 0.410 O	
-139	5576633	2	. BRACKET	
-140	130434	2	. SCREW,SLOTTED HEX HD 10-32 X 0.375 LG	
-141	9092	2	. LOCKWASHER,SPLIT- 0.194 ID X 0.337 OD	
-142	1940	2	. WASHER,FLAT- 0.192 ID X 0.562 OD	
-143	4135028	1	. STOP	
-144	1819755	1	. GUIDE ASM,UPPER	
-145	11598	4	. NUT,HEX- 10-32	ATT PT
-146	9092	4	. LOCKWASHER,SPLIT- 0.194 ID X 0.337 OD	ATT PT
-147	1940	4	. WASHER,FLAT- 0.192 ID X 0.562 OD	ATT PT
-148	1092125	1	. CLIP	
-149	4135067	1	. ACTUATOR	
-150	438544	2	. SCREW,BD HD- 4-40 X 1.000 LG	
-151	5593433	1	. GUARD	
-152	1589401	1	. SWITCH ASM	
-153	47987	2	. NUT,HEX- 2-56	
-154	1815109	2	. BRACKET,UPPER GUIDE	
-155	120211	4	. SCREW,HEX HD- 10-32 X 0.500 LG	ATT PT
-156	9092	4	. LOCKWASHER,SPLIT- 0.194 ID X 0.337 OD	ATT PT
-157	1940	4	. WASHER,FLAT- 0.192 ID X 0.562 OD	ATT PT
-158	1815108	2	. BRACKET,LOWER GUIDE	
-159	120211	4	. SCREW,HEX HD- 10-32 X 0.500 LG	ATT PT
-160	9092	4	. LOCKWASHER,SPLIT- 0.194 ID X 0.337 OD	ATT PT
-161	1940	4	. WASHER,FLAT- 0.192 ID X 0.562 OD	ATT PT
-162	1819756	1	. GUIDE ASM,LOWER	
-163	11598	4	. NUT,HEX- 10-32	ATT PT
-164	9092	4	. LOCKWASHER,SPLIT- 0.194 ID X 0.337 OD	ATT PT
-165	1940	4	. WASHER,FLAT- 0.192 ID X 0.562 OD	ATT PT
-166	5593455	1	. GUIDE ASM	
-167	12553	2	. WASHER,FL- 0.187 ID X 0.375 X 0.024 THK	
-168	1815411	2	. . SCREW,SHOULDER- 6-32	
-169	1821336	2	. . STOP	
-170	1812638	2	. . GUIDE,FORMS	
-171	1794804	3	. . CLIP	
-172	5593454	1	. . DECAL	
-173	1815302	1	. . GUIDE-FORMS ENTRANCE	
-174	1819764	1	. CHANNEL	
-175	38364	6	. SCREW SOCKET	ATT PT
-176	906744	1	. PLATE,SERIAL NO.-US/CANADA/WTC	
-176	855282	1	. PLATE,SERIAL NO.-SWEDEN	
-177	906758	1	. PLATE,SERIAL NO.-US/CANADA/WTC	
-177	855283	1	. PLATE,SERIAL NO.-SWEDEN	
-178	842555	1	. PLATE-UL APPROVAL	
-178	842556	1	. PLATE-UL APPROVAL	
-178	855286	1	. PLATE-UL APPROVAL	
-178	960766	1	. PLATE-CSA APPROVAL	
-179	6808548	1	. PLATE-POWER RATE- 60 HZ	
-179	6808543	1	. PLATE-POWER RATE- 60 HZ	
-179	6808542	1	. PLATE-POWER RATE- 50 HZ	
-180	369207	1	. LABEL-VOLTAGE	
-181	960748	1	. PLATE-PROPERTY OF USA	
-181	855263	1	. PLATE-PROPERTY OF USA/WTC	
-181	960746	1	. PLATE-PROPERTY OF CANADA	
-181	960740	1	. PLATE-MFD BY CANADA	
-181	911932	1	. PLATE-MFD IN CANADA	
-181	960742	1	. PLATE-RECONDITIONED IN CANADA	
-181	960752	1	. PLATE-RECONDITIONED IN CANADA	

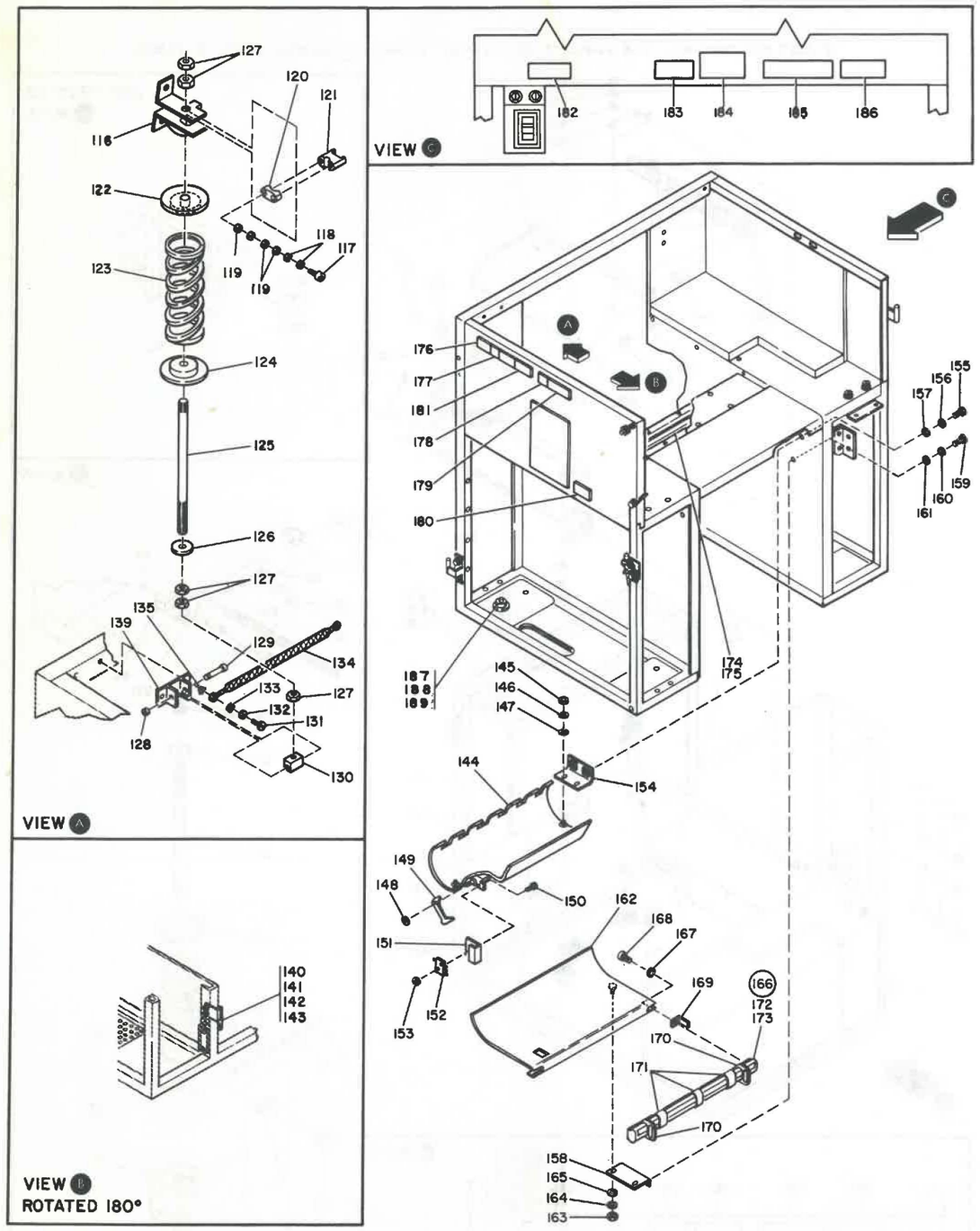

FIGURE 2. LOWER STRUCTURE ASSEMBLY. SHEET 2 OF 2. INDEX NOS. 116-189. SEE LIST 2.

LOWER STRUCTURE ASSEMBLY

FIGURE-INDEX NUMBER	PART NUMBER	UNITS PER ASM.	DESCRIPTION 1 2 3 4
2 -181	5054292	1	. PLATE-RENOVATED FOR CANADA
-181	4134350	1	. PLATES-WTC PROPERTY
-181	5054480	1	. PLATE-MFD BY WTC
-181	5054484	1	. PLATE-MFD FOR WTC
-181	5054488	1	. PLATE-RECONDITIONED BY WTC
-181	5054492	1	. PLATE-RECONDITIONED FOR WTC
-181	5054496	1	. PLATE-RENOVATED BY WTC
-181	5054290	1	. PLATE-RENOVATED FOR WTC
-181	5054478	1	. PLATE-PROPERTY OF SWEDEN
-181	5054482	1	. PLATE-MFD BY SWEDEN
-181	5054490	1	. PLATE-RECONDITIONED BY SWEDEN
-181	5054494	1	. PLATE-RECONDITIONED FOR SWEDEN
-181	5054498	1	. PLATE-RENOVATED BY SWEDEN
-181	5054294	1	. PLATE-MFG EXPORT
-181	5054296	1	. PLATE-MFG IMPORT
-181	902075	1	. PLATE-REGISTRATION
-181	960856	1	. PLATE-REGISTRATION
-182	845762	1	. LABEL
-183	369207	1	. LABEL
-184	2582954	1	. LABEL
-185	68C8596	1	. LABEL
-186	138755	1	. LABEL
-187	209567	4	. CASTER
-188	186950	4	. NUT,HEX 8-32
-189	130987	4	. LOCKWASHER

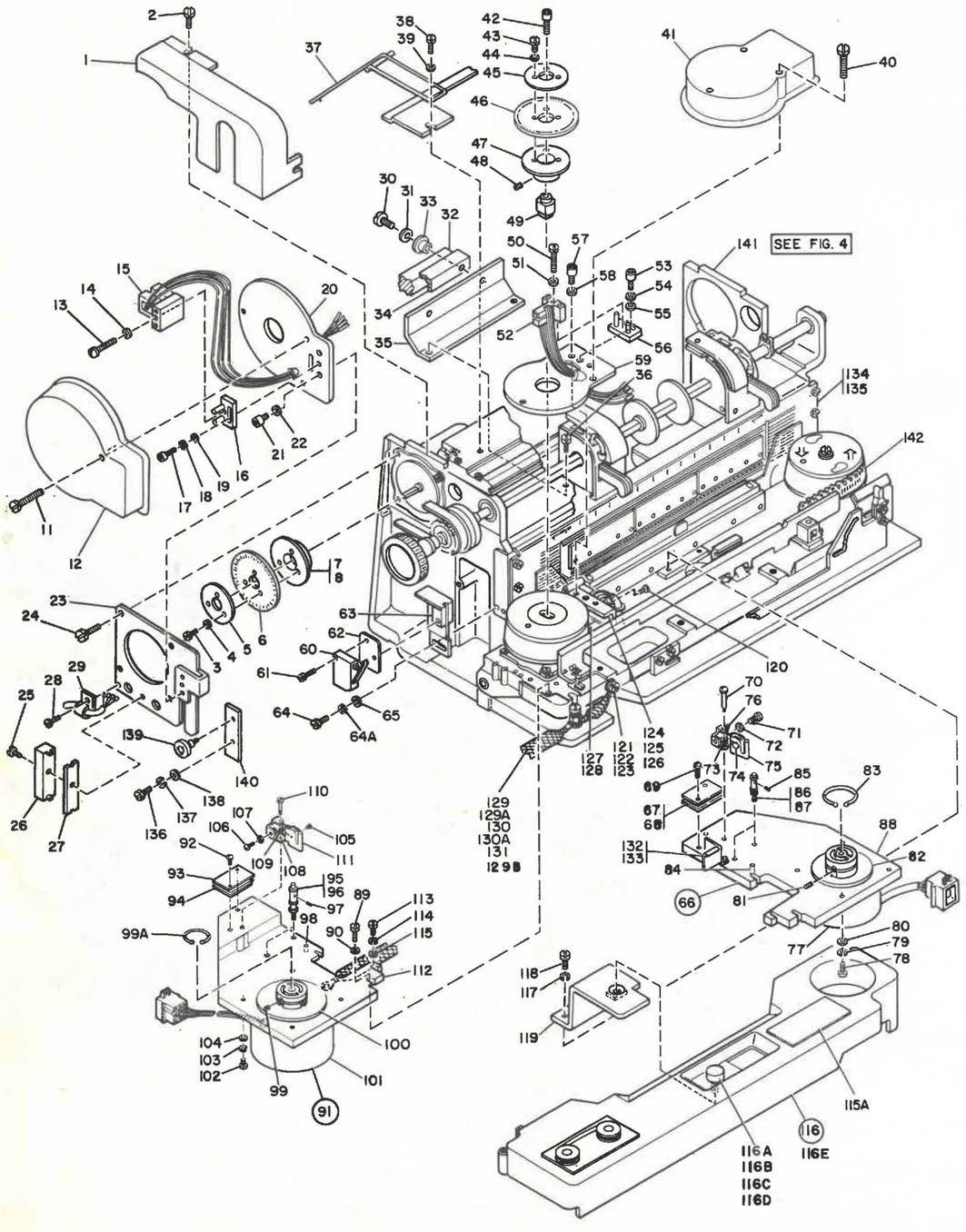

FIGURE 3. MECHANISM FINAL ASSEMBLY. SEE LIST 3.

MECHANISM FINAL ASSEMBLY

FIGURE-INDEX NUMBER	PART NUMBER	UNITS PER ASM.	DESCRIPTION 1 2 3 4	
3 -	1808563	REF	MECHANISM FINAL ASSEMBLY MODEL 1 FOR NEXT HIGHER ASM SEE FIGURE 1-4 FOR ILLUSTRATION SEE FIGURE 3	
-	1808564	REF	MECHANISM FINAL ASSEMBLY MODEL 2 FOR NEXT HIGHER ASM SEE FIGURE 1-4 FOR ILLUSTRATION SEE FIGURE 3	
- 1	4135092	1	. COVER	
- 2	5528	1	. SCREW,BD HD- 8-32 X 0.625 LG	ATT PT
- 3	438538	3	. SCREW,BIND HD- 2-56 X 0.250 LG	
- 4	257985	1	. WASHER,PLAIN- 0.125 ID X 0.250 OD	
- 5	4135096	1	. STIFFENER,DISC	
- 6	4703234	1	. DISC,NEW STYLE	
- 7	195	1	. SETSCREW,6 FLUTE 10-32 X 1.875 LG	
- 8	4135072	1	. COLLAR	
- 11	4703261	3	. SCREW	
- 12	5576611	1	. COVER ASM- BELT	
- 13	438552	1	. SCREW,MACH BD HD- 4-40 X 0.750 LG	
- 14	257985	1	. WASHER,PLAIN- 0.125 ID X 0.250 OD	
- 15	6808527	1	. TRANSDUCER ASSEMBLY	
- 16	4135089	1	. BLOCK ASM	
- 17	186924	1	. SCREW,CAP,SOC HD,FLUTED-4-40 X 0.375 LG	
- 18	257984	1	. LOCKWASHER,SPLIT- 0.115 ID X 0.212 OD	
- 19	257985	1	. WASHER,PLAIN- 0.125 ID X 0.250 OD	
- 20	5576606	1	. SUPPORT	
- 21	1072433	2	. SCREW,CAP SOC 8-32 X 1/4 LG	
- 22	22478	2	. WASHER,FL- 0.170 ID X 0.375 OD	
- 23	5576639	1	. BRACKET	
- 24	55198	4	. SCREW	ATT PT
- 25	438549	1	. SCREW,BD HD- 4-40 X 0.437 LG	
- 26	302090	1	. BLOCK,TERMINAL	
- 27	302131	1	. STRIP,INSULATOR 2.094 LG	
- 28	58207	1	. SCREW,BD HD- 8-32 X 0.250 LG	
- 29	2102364	1	. CLAMP,LOOP- 0.22 ID X 0.17 DIA MTG HOLE	ATT PT
- 30	322551	2	. SCREW,BD HD- 6-32 X 0.750 LG	
- 31	307286	2	. SPACER	
- 32	642571	1	. BAR	
- 33	642597	2	. BUSHING	
- 34	642598	1	. INSULATOR	
- 35	4135085	1	. BRACKET	
- 36	10170	2	. SCREW,BD HD- 6-32 X 0.250 LG	ATT PT
- 37	1815105	1	. GUIDE,UPPER	
- 38	34512	2	. SCREW,BD HD- 8-32 X 0.375 LG	ATT PT
- 39	22478	2	. WASHER,FL- 0.170 ID X 0.375 OD	ATT PT
- 40	5257443	3	. SCREW	ATT PT
- 41	5576611	1	. COVER ASM- BELT	
- 42	332560	1	. SCREW,CAP SOC HD- 8-32 X 1.250 LG	ATT PT
- 43	438538	3	. SCREW,BD HD- 2-56 X 0.250 LG	
- 44	257985	3	. WASHER,PLAIN- 0.125 ID X 0.250 OD	
- 45	4135096	1	. STIFFENER,DISC	
- 46	4135073	1	. DISC	
- 47	4135072	1	. COILAB	
- 48	195	1	. SETSCREW,6 FLUTE 10-32 X 1.875 LG	ATT PT
- 49	5576607	1	. HUB,EMITTER	
- 50	4388552	1	. SCREW	ATT PT
- 51	257985	1	. WASHER,PLAIN- 0.125 ID X 0.250 OD	ATT PT
- 52	6808527	1	. TRANSDUCER ASSEMBLY	
- 53	186924	1	. SCREW,CAP,SOC HD,FLUTED-4-40 X 0.375 LG	
- 54	257984	1	. LOCKWASHER,SPLIT- 0.115 ID X 0.212 OD	ATT PT
- 55	257985	1	. WASHER,PLAIN- 0.125 ID X 0.250 OD	ATT PT
- 56	4135089	1	. BLOCK ASM	
- 57	1072433	2	. SCREW,CAP SOC 8-32 X 1/4 LG	
- 58	22478	2	. WASHER,FL- 0.170 ID X 0.375 OD	ATT PT
- 59	5576606	1	. SUPPORT	
- 60	5616034	1	. SWITCH	
- 61	438550	2	. SCREW,BD HD- 4-40 X 0.500 LG	ATT PT
- 62	5312656	1	. SHIELD,SWITCH	
- 63	5576667	1	. BRACKET,SWITCH MTG	
- 64	104613	2	. SCREW,HEX SOC HD- 8-32 X 0.500 LG	ATT PT
- 64A	1090873	2	. LOCKWASHER,SPLIT- 0.168 ID X 0.296 OD	ATT PT
- 65	22478	2	. WASHER,FL- 0.170 ID X 0.375 OD	ATT PT
- 66	1815070	1	. RIBBON DRIVE ASM- RIGHT	
- 67	5576617	1	. . SWITCH	
- 68	749519	2	. . INSULATOR	
- 69	52523	2	. . SCREW	
- 70	749513	1	. . STUD	
- 71	35739	1	. . SCREW	
- 72	257187	2	. . NUT	

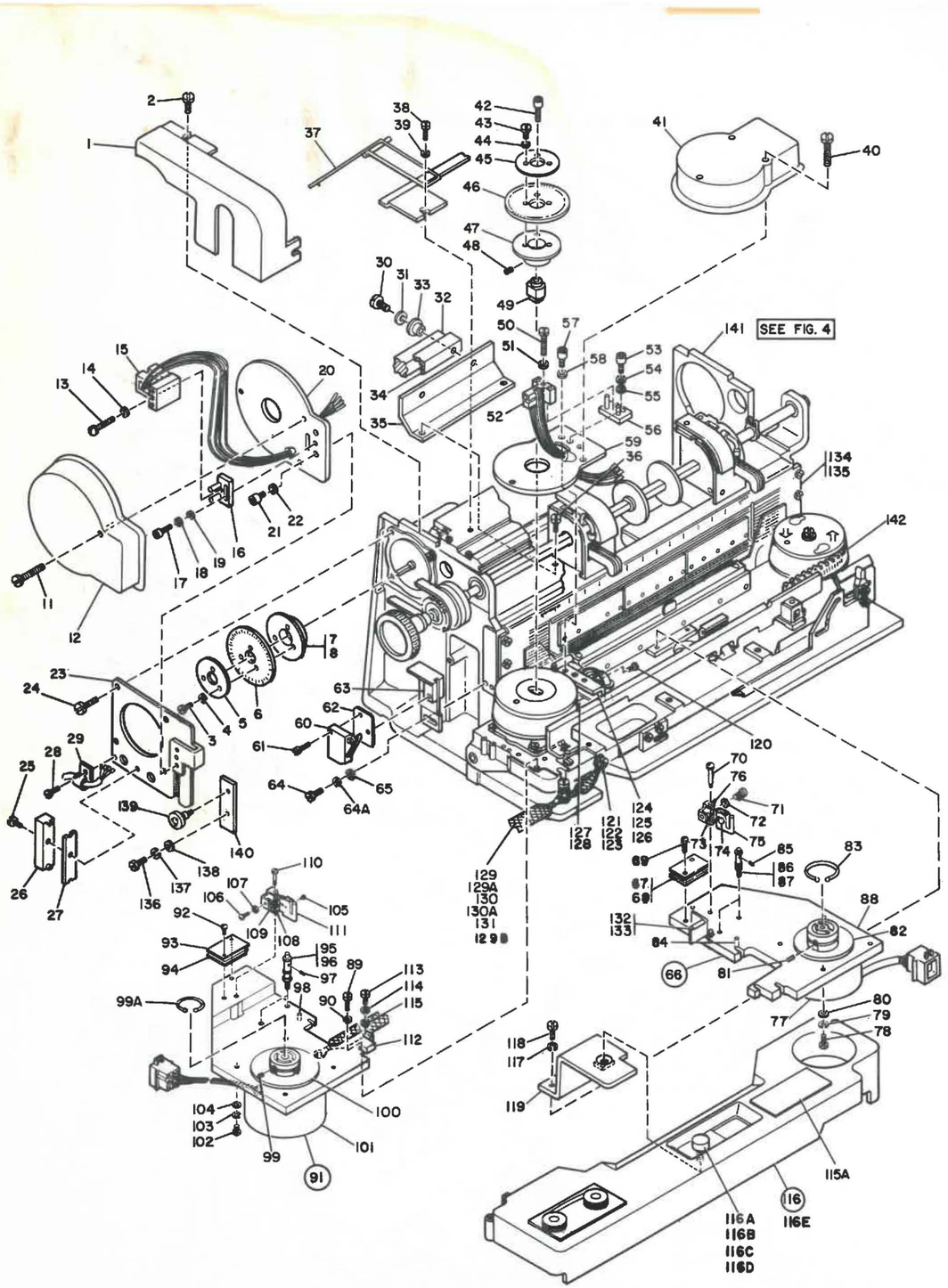

FIGURE 3. MECHANISM FINAL ASSEMBLY. SEE LIST 3.

MECHANISM FINAL ASSEMBLY

FIGURE-INDEX NUMBER	PART NUMBER	UNITS PER ASM.	DESCRIPTION 1 2 3 4
3 - 73	832611	1	. . SPRING
- 74	832610	1	. . PIN
- 75	832626	1	. . ACTUATOR,SWITCH
- 76	832612	1	. . ACTUATOR
- 77	4138363	1	. . MOTOR A,STEPPER
- 78	2994	4	. . SCREW
- 79	9092	4	. . LOCK WASHER
- 80	45690	4	. . WASHER
- 81	257971	2	. . SET SCREW
- 82	4138354	1	. . HUB
- 83	4703260	1	. . SPRING
- 84	234977	2	. . PIN
- 85	257968	2	. . SET SCREW
- 86	1815078	2	. . SPOOL ROLL
- 87	1815067	2	. . STUD
- 88	1815071	1	. . PLATE
- 89	322065	4	. SCREW,BD HD- 6-32 X 0.625 LG
- 90	257986	4	. WASHER,FL- 0.156 ID X 0.312 OD
- 91	1815068	1	. RIBBON DRIVE ASM- LEFT
- 92	52523	2	. . SCREW,FIL HD- 4-40 X 0.625 LG
- 93	5576617	1	. . SWITCH
- 94	749519	2	. . SHIELD,SWITCH
- 95	1815078	2	. . SPOOL,ROLL
- 96	1815095	2	. . STUD
- 97	257968	2	. . SCREW,SET,FLATPOINT-6-32 X 0.125 LG
- 98	234977	1	. . PIN,ROLL- 0.135 CE X 0.375 LG
- 99	257971	2	. . SETSCREW,SPLINE DR CUP PT 6-32 X 0.250LG
- 99A	4703260	1	. . SPRING
-100	4138354	1	. . HUB
-101	4138363	1	. . MOTOR ASM- STEPPER
-102	2994	4	. . SCREW,FIL HD- 10-32 X 0.625 LG
-103	9092	4	. . LOCKWASHER,SPLIT- 0.194 ID X 0.337 OD
-104	45690	4	. . WASHER,FL- 0.203 ID X 0.438 OD
-105	832610	1	. . PIN- 0.093 DIA X 0.380 LG
-106	35739	1	. . SCREW,BD HD- 6-32 X 0.438 LG
-107	257187	2	. . NUT,HEX- 6-32
-108	832613	1	. . ACTUATOR,LEFT
-109	832611	1	. . SPRING
-110	749513	1	. . STUD- 4-40 X 1.134 LG
-111	832626	1	. . ACTUATOR,SWITCH
-112	1815069	1	. . PLATE
-113	5528	2	. SCREW,BD HD- 8-32 X 0.625 LG
-114	1090873	2	. LOCKWASHER,SPLIT- 0.168 ID X 0.296 OD
-115	22478	2	. WASHER,FL- 0.170 ID X 0.375 OD
-115A	5593447	1	. LABEL-ENGLISH/JAPANESE
-115A	4703263	1	. LABEL-ITALIAN
-115A	4703265	1	. LABEL-GERMAN
-115A	6808537	1	. LABEL-FRENCH
-115A	4703262	1	. LABEL-CANADIAN FRENCH
-115A	4703264	1	. LABEL-SPANISH
-116	5593430	1	. COVER ASSEMBLY
-116A	5576673	1	. . FASTENER
-116B	753317	1	. . SPRING
-116C	1940	1	. . WASHER,FLAT- 0.192 ID X 0.562 OD
-116D	257701	1	. . CLIP
-116E	5593458	1	. . COVER
-117	10170	2	. SCREW,BD HD- 6-32 X 0.250 LG
-118	6364	2	. LOCKWASHER,SPLIT- 0.141 ID X 0.253 OD
-119	5576664	1	. BRACKET
-120	34512	1	. SCREW,BD HD- 8-32 X 0.375 LG
-121	856575	1	. JUMPER ASM
-122	58207	1	. SCREW
-123	55901	1	. LOCK WASHER
-124	302131	1	. STRIP,INSULATOR 2.094 LG
-125	302090	1	. BLOCK,TERMINAL
-126	438549	1	. SCREW,BD HD- 4-40 X 0.437 LG
-127	55918	2	. SCREW,BD HD- 10-32 X 0.625 LG
-128	5576609	1	. BRACKET
-129	438602	1	. SCREW,MACH BD HD- 10-32 X 1.500 LG
-129A	313385	2	. SPACER
-129B	759024	1	. STANDOFF
-130	56079	1	. LOCKWASHER,EXT TEETH- 0.204 ID X 0.410 O
-131	856575	1	. JUMPER ASM
-132	5593457	1	. GUIDE
-133	251970	1	. SCREW,BD HD- 4-40 X 0.250 LG ATT PT
-134	1794535	1	. GUIDE ASM-MODEL 1
-134	1821426	1	. GUIDE ASM-MODEL 2

FIGURE-INDEX NUMBER	PART NUMBER	UNITS PER ASM.	DESCRIPTION 1 2 3 4
3 -135	1E6758	4	. SCREW,BD HD- 8-32 X 0.437 LG ATT PT
-136	130434	1	. SCREW,SLOTTED HEX HD 10-32 X 0.375 LG
-137	9092	1	. LOCKWASHER,SPLIT- 0.194 ID X 0.337 OD ATT PT
-139	5576646	1	. BEARING
-140	5576644	1	. SLIDE
-141	1794573	1	. BASIC MECHANISM ASM
			FOR DETAIL BREAKDOWN SEE FIGURE 4
-142	1794986	1	. BELT,US-CANADA,48 CHAR SET,.079 HI
-142	1794987	1	. BELT,US-CANADA,64 CHAR SET,.079 HI -EBCDIC
-142	1794988	1	. BELT,US-CANADA,64 CHAR SET,.079 HI -ASCII
-142	1795023	1	. BELT,US-CANADA,38 CHAR SET,.095 HI
-142	1795022	1	. BELT,US-CANADA,42 CHAR SET,.095 HI
-142	1795244	1	. BELT,US-CANADA,48 CHAR SET,.095 HI
-142	1794622	1	. BELT,US-CANADA,64 CHAR SET,.095 HI
-142	1794623	1	. BELT,US-CANADA,96 CHAR SET,.095 HI
-142	1794975	1	. BELT,CANADA-FRANCE,48 CHAR SET,.079 HI
-142	1794976	1	. BELT,CANADA-FRANCE,64 CHAR SET,.
-142	1795208	1	. BELT,CANADA-FRANCE,48 CHAR SET,.095 HI
-142	1794624	1	. BELT,CANADA-FRANCE,64 CHAR SET,.095 HI
-142	1794625	1	. BELT,CANADA-FRANCE,96 CHAR SET,.095 HI
-142	1794688	1	. BELT,FRANCE,48 CHAR SET,.079 HI
-142	1794693	1	. BELT,FRANCE,64 CHAR SET,.079 HI
-142	1795208	1	. BELT,FRANCE,48 CHAR SET,.095 HI
-142	1794879	1	. BELT,FRANCE,64 CHAR SET,.095 HI
-142	1794880	1	. BELT,FRANCE,96 CHAR SET,.095 HI
-142	1794912	1	. BELT,SPAIN,48 CHAR SET,.079 HI
-142	1794914	1	. BELT,SPAIN,64 CHAR SET,.079 HI
-142	1795160	1	. BELT,SPAIN,48 CHAR SET,.095 HI
-142	1794889	1	. BELT,SPAIN,64 CHAR SET,.095 HI
-142	1794890	1	. BELT,SPAIN,96 CHAR SET,.095 HI
-142	1794971	1	. BELT,SPANISH SPEAKING,48 CHAR SET,.079
-142	1794972	1	. BELT,SPANISH SPEAKING,64 CHAR SET,.079
-142	1795163	1	. BELT,SPANISH SPEAKING,48 CHAR SET,.095
-142	1794915	1	. BELT,SPANISH SPEAKING,64 CHAR SET,.095
-142	1794916	1	. BELT,SPANISH SPEAKING,96 CHAR SET,.095
-142	1794697	1	. BELT,ITALY,48 CHAR SET,.079 HI
-142	1794836	1	. BELT,ITALY,64 CHAR SET,.079 HI
-142	1795210	1	. BELT,ITALY,48 CHAR SET,.095 HI
-142	1794881	1	. BELT,ITALY,64 CHAR SET,.095 HI
-142	1794882	1	. BELT,ITALY,96 CHAR SET,.095 HI
-142	1794703	1	. BELT,AUSTRIA-GERMANY,48 CHAR SET,.079 HI
-142	1794695	1	. BELT,AUSTRIA-GERMANY,52 CHAR SET,.079 HI
-142	1794917	1	. BELT,AUSTRIA-GERMANY,64 CHAR SET,.079 HI
-142	1794918	1	. BELT,AUSTRIA-GERMANY,64 CHAR SET,.079 HI
-142	1795124	1	. BELT,AUSTRIA-GERMANY,48 CHAR SET,.095 HI
-142	1795030	1	. BELT,AUSTRIA-GERMANY,52 CHAR SET,.095 HI
-142	1794626	1	. BELT,AUSTRIA-GERMANY,64 CHAR SET,.095 HI
-142	1794670	1	. BELT,AUSTRIA-GERMANY,96 CHAR SET,.095 HI
-142	1794929	1	. BELT,UNITED KINGDOM,48 CHAR SET,.079 HI
-142	1794930	1	. BELT,UNITED KINGDOM,64 CHAR SET,.079 HI
-142	1795131	1	. BELT,UNITED KINGDOM,48 CHAR SET,.095 HI
-142	1794962	1	. BELT,UNITED KINGDOM,64 CHAR SET,.095 HI
-142	1794963	1	. BELT,UNITED KINGDOM,96 CHAR SET,.095 HI
-142	1794935	1	. BELT,DENMARK-NORWAY,48 CHAR SET,.079 HI
-142	1794937	1	. BELT,DENMARK-NORWAY,64 CHAR SET,.079 HI
-142	1795154	1	. BELT,DENMARK-NORWAY,48 CHAR SET,.095 HI
-142	1794820	1	. BELT,DENMARK-NORWAY,64 CHAR SET,.095 HI
-142	1794876	1	. BELT,DENMARK-NORWAY,96 CHAR SET,.095 HI
-142	1794939	1	. BELT,FINLAND-SWEDEN 48 CHAR SET,.079 HI
-142	1795060	1	. BELT,FINLAND-SWEDEN 64 CHAR SET,.079 HI
-142	1795157	1	. BELT,FINLAND-SWEDEN 48 CHAR SET,.095 HI
-142	1794877	1	. BELT,FINLAND-SWEDEN 64 CHAR SET,.095 HI
-142	1794878	1	. BELT,FINLAND-SWEDEN 96 CHAR SET,.095 HI
-142	1794927	1	. BELT,BELGIUM,48 CHAR SET,.079 HI
-142	1794933	1	. BELT,BELGIUM,64 CHAR SET,.079 HI
-142	1795208	1	. BELT,BELGIUM,48 CHAR SET,.095 HI
-142	1794671	1	. BELT,BELGIUM,64 CHAR SET,.095 HI
-142	1794672	1	. BELT,BELGIUM,96 CHAR SET,.095 HI
-142	1794908	1	. BELT,PORTUGAL,48 CHAR SET,.079 HI
-142	1794910	1	. BELT,PORTUGAL,64 CHAR SET,.079 HI
-142	1795139	1	. BELT,PORTUGAL,48 CHAR SET,.095 HI
-142	1794887	1	. BELT,PORTUGAL,64 CHAR SET,.095 HI
-142	1794888	1	. BELT,PORTUGAL,96 CHAR SET,.095 HI
-142	1803802	1	. BELT,INTERNATIONAL,48 CHAR SET,.095 HI
-142	1794952	1	. BELT,INTERNATIONAL,64 CHAR SET,.095 HI
-142	1794955	1	. BELT,INTERNATIONAL,96 CHAR SET,.095 HI
-142	1794979	1	. BELT,JAPAN,48 CHAR SET,.079 HI

MECHANISM FINAL ASSEMBLY

FIGURE-INDEX NUMBER	PART NUMBER	UNITS PER ASM.	DESCRIPTION 1 2 3 4
3 -142	1794985	1	. BELT,JAPAN,64 CHAR SET,.079 HI
-142	1795172	1	. BELT,JAPAN,48 CHAR SET,.095 HI
-142	1794883	1	. BELT,JAPAN,64 CHAR SET,.095 HI
-142	1794886	1	. BELT,JAPAN-KATAKANA,96 CHAR SET,.095 HI
-142	1795106	1	. BELT,JAPAN-KATAKANA,120 CHAR SET,.095 HI

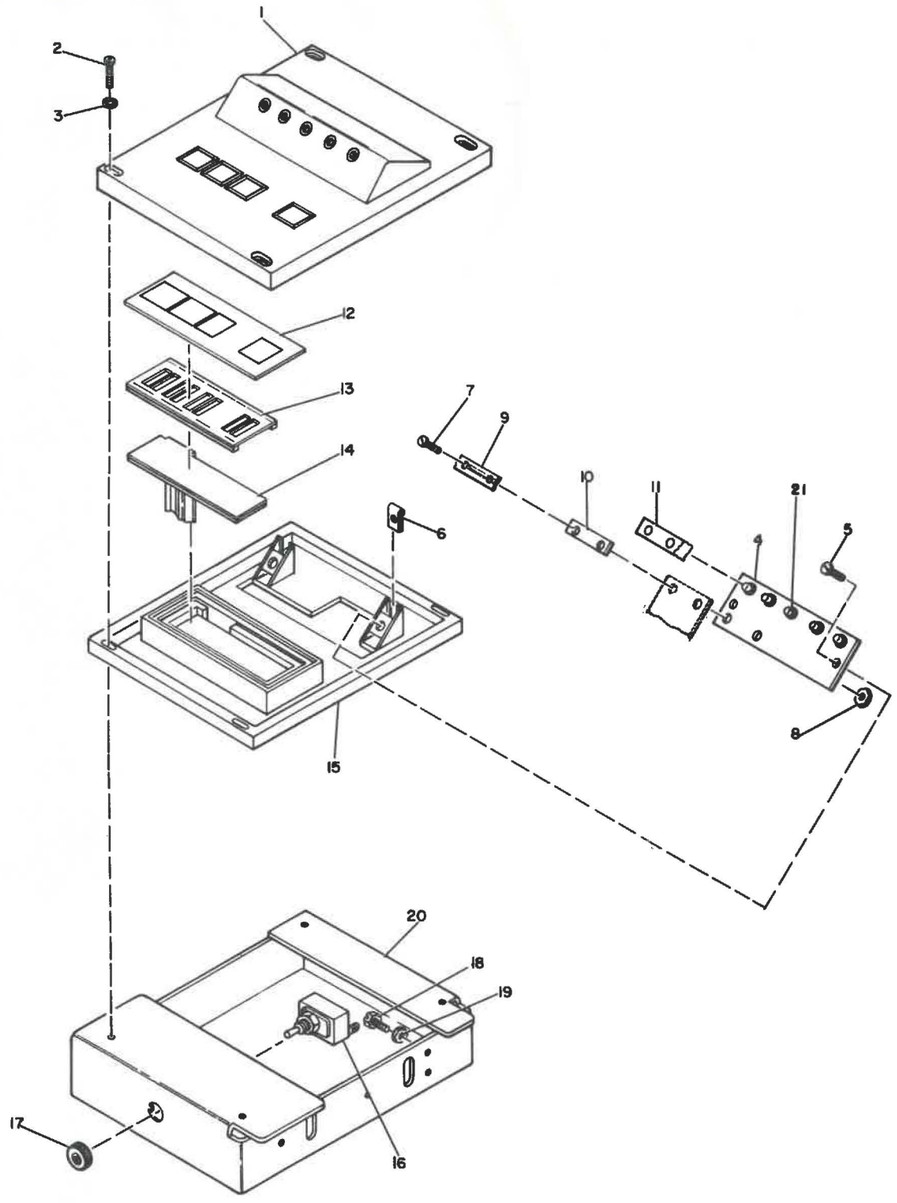

FIGURE 3A. OPERATOR PANEL ASSEMBLY. SEE LIST 3A.

OPERATOR PANEL ASSEMBLY

FIGURE-INDEX NUMBER	PART NUMBER	UNITS PER ASM.	DESCRIPTION 1 2 3 4	
3A-	5593446	REF	OPERATOR PANEL ASSEMBLY FOR NEXT HIGHER ASM SEE FIGURE 1-12 FOR ILLUSTRATION SEE FIGURE 3	
- 1	4703212	1	. COVER ASM,ENGLISH	
- 1	4703273	1	. COVER ASM,SPANISH	
- 1	4703271	1	. COVER ASM,FRENCH CANADIAN	
- 1	4703270	1	. COVER ASM,GERMAN	
- 1	4703273	1	. COVER ASM,ITALIAN	
- 2	322551	4	. SCREW,BD HD- 6-32 X 0.750 LG	ATT PT
- 3	257986	4	. WASHER,FL- 0.156 ID X 0.312 OD	ATT PT
- 4	5593440	1	. PANEL,TOUCH SENSE LED	
- 5	38235	2	. SCREW,BD HD- 6-32 X 0.312 LG	ATT PT
- 6	2194720	2	. CLIP	
- 7	338238	2	. SCREW,BD HD- 4-40 X 0.312 LG	ATT PT
- 8	37913	2	. NUT,HEX- 0.375-16	ATT PT
- 9	4135025	1	. PLATE,PC BOARD CONTACT	
- 10	4135026	1	. SPACER	
- 11	5593459	1	. SEAL	
- 12	5593434	1	. OVERLAY,ENGLISH	
- 12	4703267	1	. OVERLAY,SPANISH	
- 12	4703265	1	. OVERLAY,FRENCH CANADIAN	
- 12	4703266	1	. OVERLAY,GERMAN	
- 12	4703268	1	. OVERLAY,ITALIAN	
- 13	5593435	1	. UNDERLAY	
- 14	5593438	1	. SWITCH ASM,DIAPHRAGM	
- 15	5593441	1	. HOUSING,GRID SUPPORT	
- 16	738826	1	. SWITCH	
- 17	216323	1	. NUT,DRESS-0.469-32	ATT PT
- 18	55711	3	. SCREW,MACH HEX HD- 10-32 X 0.562 LG	
- 19	11598	3	. NUT,HEX- 10-32	
- 20	5593443	1	. BRACKET,OPERATOR PANEL	
- 21	6808586	1	. LED,RED	
- 21	6808587	1	. LED,GREEN	
- 21	6808588	3	. LED,YELLOW	

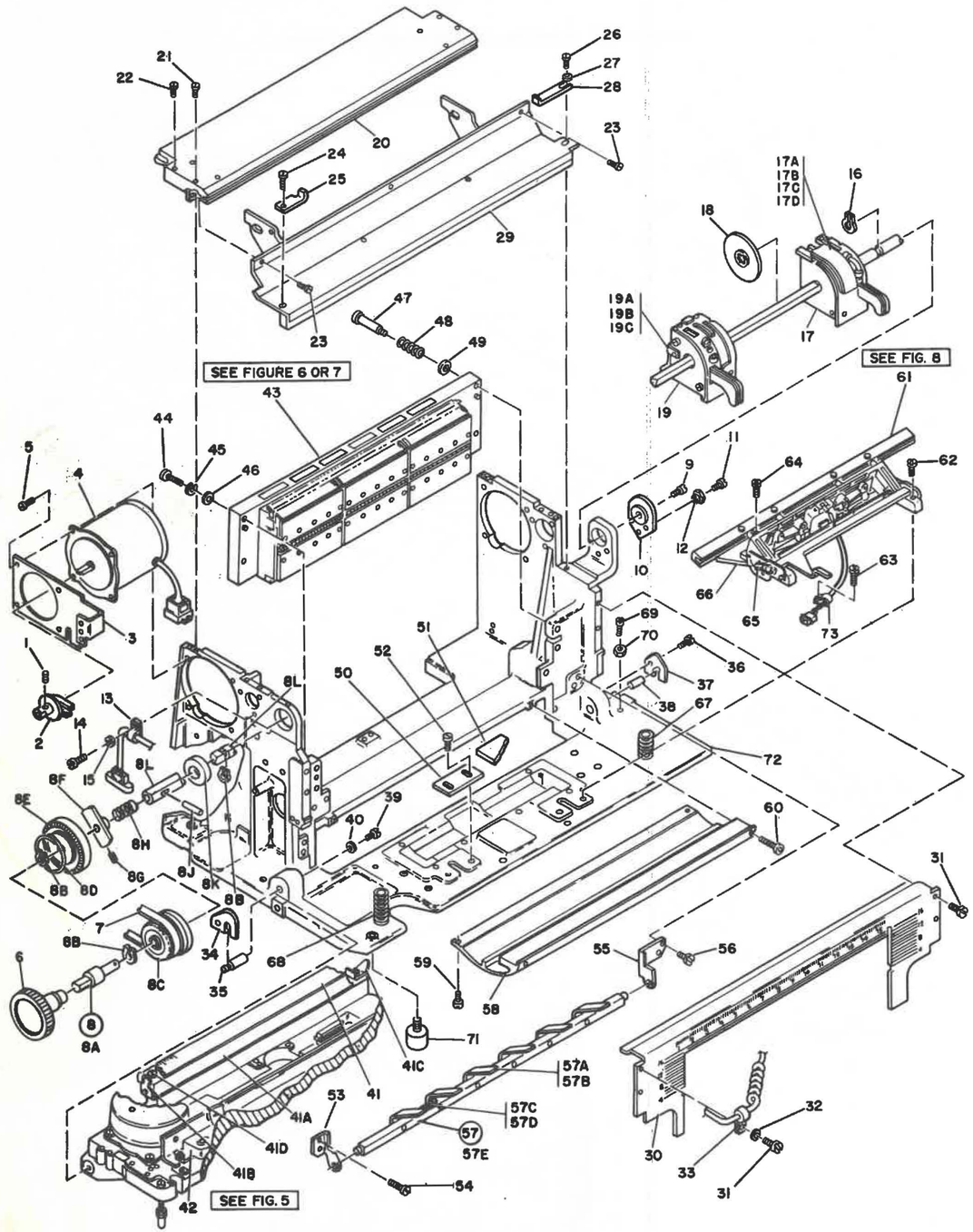

FIGURE 4. BASIC MECHANISM ASSEMBLY. SEE LIST 4.

BASIC MECHANISM ASSEMBLY

FIGURE-INDEX NUMBER	PART NUMBER	UNITS PER ASM.	DESCRIPTION 1 2 3 4	
4 -	1794573	REF	BASIC MECHANISM ASSEMBLY FOR NEXT HIGHER ASM SEE FIGURE 3-141 FOR ILLUSTRATION SEE FIGURE 4	
- 1	123780	1	. SCREW,6 FLU- 10-32 X 0.188 LG	
- 2	4703236	1	. PULLEY ASM,15 TEETH-NEW STYLE	
- 3	5576639	4	. BRACKET	
- 4	4703237	1	. MOTOR ASM,NEW STYLE	
- 5	55918	4	. SCREW,BD HD- 10-32 X 0.625 LG	ATT PT
- 6	1814637	1	. KNOB ASSEMBLY	
- 7	366291	1	. BELT,TIMING- 75 TEETH	
- 8	1794532	1	. CLUTCH ASSEMBLY,SINGLE FEED	
- 8A	1815361	1	. . ROD	
- 8B	839379	3	. . RING,RETAINER- 0.460 ID	
- 8C	1812646	1	. . GEAR,DRIVE	
- 8D	1802014	1	. . RING,RETAINER	
- 8E	1812645	1	. . CLUTCH	
- 8F	1812643	1	. . DRIVER,CLUTCH	
- 8G	257974	1	. . SETSCREW,FLU- 6-32 X 0.375 LG	
- 8H	1812291	1	. . SPRING,COMPRESSION	
- 8J	1815380	1	. . PIN,DOWEL	
- 8K	156231	1	. . BEARING,BALL- 0.500 ID X 1.125 OD	
- 8L	1812306	1	. . SHAFT,DRIVE	
- 9	35739	2	. SCREW,BD HD- 6-32 X 0.438 LG	ATT PT
- 10	1814634	1	. BEARING ASM	
- 11	322065	1	. SCREW,BD HD- 6-32 X 0.625 LG	ATT PT
- 12	1814601	1	. ECCENTRIC	
- 13	5213276	1	. CLAMP	ATT PT
- 14	81693	1	. SCREW,BD HD- 6-32 X 0.375 LG	ATT PT
- 15	22478	1	. WASHER,FL- 0.170 ID X 0.375 OD	ATT PT
- 16	839379	1	. RING,RETAINER- 0.460 ID	ATT PT
- 17	1816026	1	. TRACTOR ASSEMBLY	
- 17A	1816028	1	. COVER,RIGHT	
- 17A	1816027	1	. COVER,LEFT	
- 17B	1812272	1	. SPRING	
- 17C	1812271	1	. PIVOT	
- 17D	264998	1	. ROLL PIN- 0.250 LG	
- 18	1794534	2	. DISC ASSEMBLY	
- 19	1816025	1	. TRACTOR ASSEMBLY	
- 19A	1812301	1	. . DECTECTOR ASM	
- 19B	336628	1	. . NUT	
- 19C	38433		. . SCREW,FL HD- 4-40 X 0.250 LG	ATT PT
- 20	1794618	1	. BAR	ATT PT
- 21	5528	2	. SCREW,BD HD- 8-32 X 0.625 LG	ATT PT
- 22	845	2	. SCREW,FIL HD- 8-32 X 0.500 LG	ATT PT
- 23	58207	3	. SCREW,BD HD- 8-32 X 0.250 LG	
- 24	34512	1	. SCREW,BD HD- 8-32 X 0.375 LG	ATT PT
- 25	1794814	1	. STOP	
- 26	25627	1	. SCREW,BD HD- 8-32 X 0.500 LG	ATT PT
- 27	22478	1	. WASHER,FL- 0.170 ID X 0.375 OD	ATT PT
- 28	1814630	1	. STOP	
- 29	1821429	1	. SEAL ASM	
- 30	1821426	1	. GUIDE ASM,PRINT POSITION	
- 31	166758	4	. SCREW,BD HD- 8-32 X 0.437 LG	ATT PT
- 32	22478	1	. WASHER,FL- 0.170 ID X 0.375 OD	ATT PT
- 33	5213276	1	. CLAMP	ATT PT
- 34	1815419	1	. SPACER	
- 35	1815417	1	. PIN	
- 36	34512	2	. SCREW,BD HD- 8-32 X 0.375 LG	ATT PT
- 37	1815419	1	. SPACER	
- 38	1815416	1	. PIN	
- 39	34512	1	. SCREW,BD HD- 8-32 X 0.375 LG	ATT PT
- 40	23141	1	. WASHER,FLAT- 0.199 ID X 0.562 OD	ATT PT
- 41	1794806	1	. SCALE	
- 41A	1794787	1	. SHIELD,MODEL 1 AND 2	
- 41B	1794792	1	. BRACKET	
- 41C	1794791	1	. BRACKET	
- 41D	10170	2	. SCREW,BD HD- 6-32 X 0.250 LG	
- 42	1794572	1	. FRONT ASSEMBLY FOR DETAIL BREAKDOWN SEE FIGURE 5	
- 43	6808520	1	. FORMS GUIDE ASSEMBLY-MODEL 1 FOR DETAIL BRAKDOWN SEE FIGURE 6	
- 43	1794826	1	. HAMMER UNIT ASSEMBLY, MODEL 2 FOR DETAIL BREAKDOWN SEE FIGURE 7	
- 44	438588	2	. SCREW,BD HD- 8-32 X 1.250 LG	ATT PT
- 45	1090873	2	. LOCKWASHER,SPLIT- 0.168 ID X 0.296 OD	ATT PT
- 46	35229	2	. WASHER,FL- 0.171 ID X 0.437 OD	ATT PT
- 47	1800702	2	. SCREW,SHLDR- 8-32	ATT PT

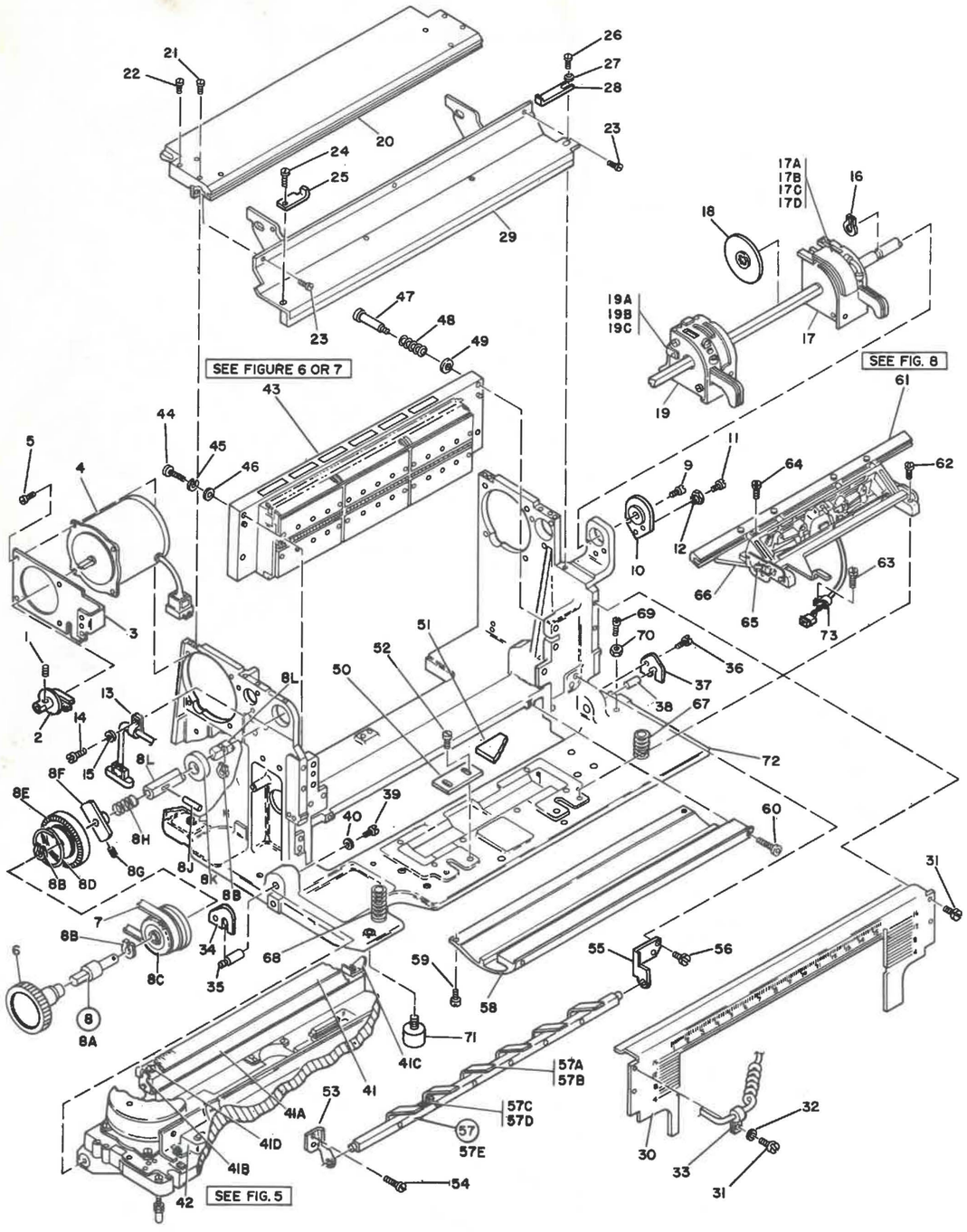

FIGURE 4. BASIC MECHANISM ASSEMBLY. SEE LIST 4.

FIGURE-INDEX NUMBER	PART NUMBER	UNITS PER ASM.	DESCRIPTION 1 2 3 4	
4 - 48	23105	2	. SPRING,COMPRESSION	
- 49	120571	2	. WASHER	ATT PT
- 50	1821393	2	. PLATE	
- 51	1800481	1	. PLATE	
- 52	34512	3	. SCREW,BD HD- 8-32 X 0.375 LG	ATT PT
- 53	1815888	1	. BRACKET-LH	
- 54	186759	2	. SCREW,BD HD- 8-32 X 0.312 LG	ATT PT
- 55	1815889	1	. BRACKET-RH	
- 56	186759	1	. SCREW,BD HD- 8-32 X 0.312 LG	ATT PT
- 57	1815892	1	. BAR ASM,TENSION	
- 57A	1815887	6	. . SPRING	
- 57B	55726	6	. . SCREW,BD HD- 6-32 X 0.188 LG	
- 57C	1815890	1	. . BRACKET	
- 57D	55726	2	. . SCREW,BD HD- 6-32 X 0.188 LG	
- 57E	1815886	1	. . BAR,FORMS TENSION	
- 58	1815870	1	. GUIDE,LOWER	
- 59	5528	2	. SCREW,BD HD- 8-32 X 0.625 LG	ATT PT
- 60	186952	2	. SCREW,SOC HEX HD- 10-32 X 1.750 LG	ATT PT
- 61	1794970	1	. CLAMP ASSEMBLY	
			FOR DETAIL BREAKDOWN SEE FIGURE 8	
- 62	438586	2	. SCREW,BD HD- 8-32 X 0.875 LG	ATT PT
- 63	25627	1	. SCREW,BD HD- 8-32 X 0.500 LG	
- 64	25627	2	. SCREW,BD HD- 8-32 X 0.500 LG	
- 65	1164127	1	. CLEVIS ASSEMBLY,INDEX LINK	
- 66	1076717	1	. LINK	
- 67	1821330	1	. SPRING,COMPRESSION	
- 68	1821330	1	. SPRING,COMPRESSION	
- 69	2031	1	. SCREW,FIL HD- 8-32 X 0.625 LG	
- 70	257189	1	. NUT,HEX- 8-32	
- 71	1800685	1	. MOUNT,SHOCK	
- 72	1794900	1	. CASTING	
- 73	5213276	1	. CLAMP	

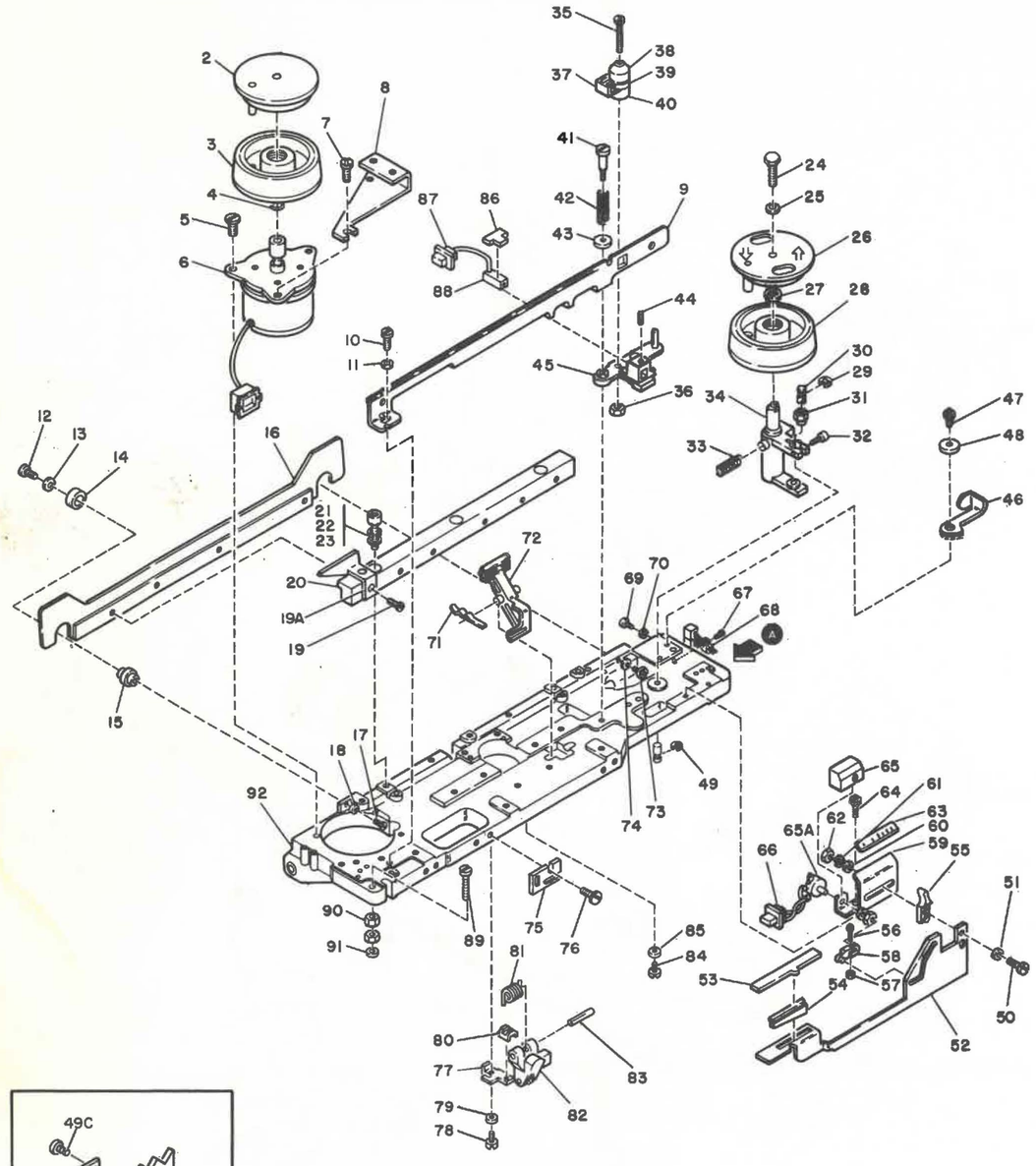

FIGURE 5. FRONT ASSEMBLY. SEE LIST 5.

FIGURE-INDEX NUMBER	PART NUMBER	UNITS PER ASM.	DESCRIPTION 1 2 3 4	
5 -	1794572	REF	FRONT ASSEMBLY FOR NEXT HIGHER ASM SEE FIGURE 4-42 FOR ILLUSTRATION SEE FIGURE 5	
- 2	1821401	1	. FLYWHEEL ASM	
- 3	1801905	1	. PULLEY ASSEMBLY,DRIVE	
- 4	251227	1	. RING, RETAINING	
- 5	32042	1	. SCREW,BD HD- 10-32 X 0.375 LG	
- 6	1816039	1	. MOTOR ASM	
- 7	55916	2	. SCREW,BD HD- 10-32 X 0.625 LG	
- 8	5576609	1	. BRACKET	
- 9	4136961	1	. GUARD	
- 10	25627	1	. SCREW,BD HD- 8-32 X 0.500 LG	ATT PT
- 11	22478	1	. WASHER,FL- 0.170 ID X 0.375 OD	ATT PT
- 12	55726	2	. SCREW,BD HD- 6-32 X 0.188 LG	ATT PT
- 13	22478	2	. WASHER,FL- 0.170 ID X 0.375 OD	ATT PT
- 14	1821358	2	. BEARING- 0.354 ID X 0.944 OD X 0.276 THK	
- 15	1815421	2	. STUD- 6-32	
- 16	5576604	1	. SHIELD ASM	
- 17	10170	1	. SCREW,BD HD- 6-32 X 0.250 LG	ATT PT
- 18	1090394	1	. WASHER,FL- 0.155 ID X 0.312 OD	ATT PT
- 19	438552	6	. SCREW,MACH BD HD- 4-40 X 0.750 LG	ATT PT
- 19A	5593456	1	. GUIDE	
- 20	1794691	1	. PLATEN,BASIC	
- 21	186931	3	. SCREW,CAP HEX SOC HD- 8-32 X 1.500 LG	ATT PT
- 22	35229	3	. WASHER,FL- 0.171 ID X 0.437 OD	ATT PT
- 23	1090873	3	. LOCKWASHER,SPLIT- 0.168 ID X 0.296 OD	ATT PT
- 24	1091035	1	. SCREW,HEX HD- 8-32 X 0.375 LG	ATT PT
- 25	856516	2	. WASHER,FL- 0.173 ID X 0.560 OD	ATT PT
- 26	1812464	1	. COVER,IDLER	
- 27	1794754	1	. PLATE,WEAR	
- 28	1801906	1	. PULLEY ASSEMBLY,IDLER	
- 29	257982	1	. CLIP,RETAINING E-TYPE	
- 30	1794809	1	. SHAFT	
- 31	1794808	1	. ECCENTRIC	
- 32	186929	1	. SCREW,CAP,SOC HD,FLUTED-6-32 X 0.875 LG	
- 33	1800527	1	. SPRING,COMPRESSION	
- 34	1812463	1	. PIVOT ASSEMBLY	
- 35	438589	1	. SCREW,BD HD- 8-32 X 1.500 LG	ATT PT
- 36	1794837	1	. NUT	ATT PT
- 37	1794758	1	. CLEANER	
- 38	1815409	1	. SUPPORT,UPPER BEARING	
- 39	1794753	1	. BEARING	
- 40	1815410	1	. SUPPORT,LOWER BEARING	
- 41	1812457	2	. SCREW,SHOULDER- 8-32	ATT PT
- 42	1794770	2	. SPRING	
- 43	139050	2	. WASHER,FL- 0.252 ID X 0.812 OD	ATT PT
- 44	257956	1	. SETSCREW, FL PT- 4-40 X 0.187 LG	
- 45	1794838	1	. BRACKET ASM	
- 46	5576636	1	. LEVER	
- 47	332620	1	. SCREW,BD HD- 10-32 X 0.500 LG	ATT PT
- 48	1812334	1	. SPACER	
- 49	257982	1	. CLIP,RETAINING E-TYPE	
- 49A	1815420	1	. SPRING	
- 49B	1815418	1	. BRACKET	
- 49C	322550	1	. SCREW,BD HD- 6-32 X 0.500 LG	ATT PT
- 49D	6364	1	. LOCKWASHER,SPLIT- 0.141 ID X 0.253 OD	ATT PT
- 49E	257187	1	. NUT,HEX- 6-32	ATT PT
- 50	438551	1	. SCREW,BD HD- 4-40 X 0.625 LG	
- 51	807612	1	. WASHER,FLAT- 0.113 ID X 0.312 OD	
- 52	1821421	1	. CARRIER	
- 53	1810966	1	. PLATE,RAMP	
- 54	1794649	1	. RAMP	
- 55	1810967	1	. KNOB	
- 56	438542	1	. SCREW,BD HD- 2-56 X 0.500 LG	ATT PT
- 57	47987	1	. NUT,HEX- 2-56	
- 58	1801999	1	. FOLLOWER	
- 59	1810964	1	. BRACKET,INDICATOR	
- 60	807612	1	. WASHER,FLAT- 0.113 ID X 0.312 OD	
- 61	257984	1	. LOCKWASHER,SPLIT- 0.115 ID X 0.212 OD	
- 62	37913	1	. NUT,HEX- 0.375-16	
- 63	1810963	1	. LABEL	
- 64	38235	1	. SCREW,BD HD- 6-32 X 0.312 LG	
- 65	1812493	1	. COVER,POTENTIOMETER	
- 65A	1810970	1	. POTENTIOMETER ASM	
- 66	1166117	1	. HOUSING,PIN TERMINAL	
- 67	236550	1	. SCREW,BD HD- 4-40 X 0.375 LG	
- 68	5213276	1	. CLAMP	

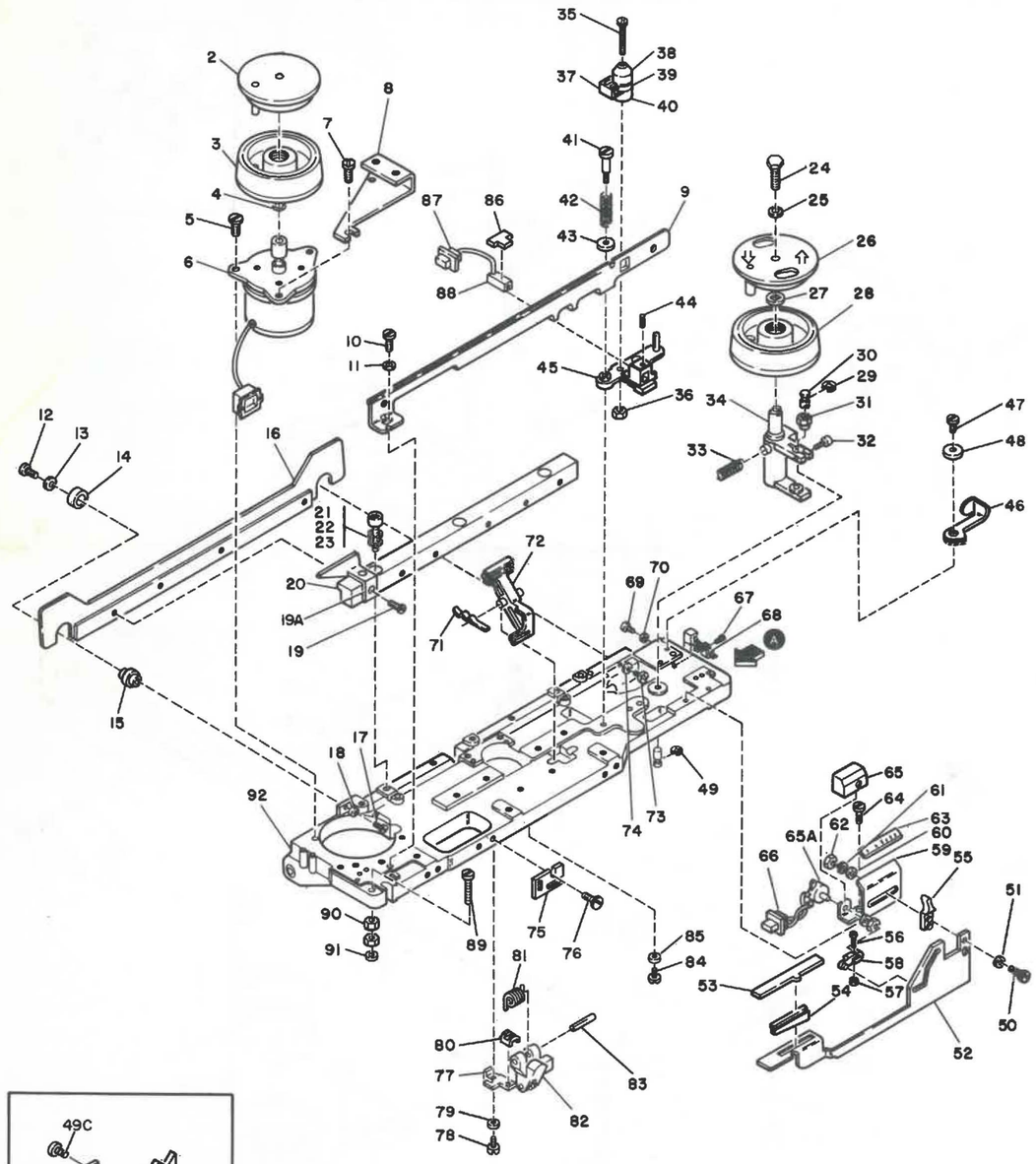

FIGURE 5. FRONT ASSEMBLY. SEE LIST 5.

FIGURE-INDEX NUMBER	PART NUMBER	UNITS PER ASM.	DESCRIPTION 1 2 3 4	
5 - 69	204616	1	. SCREW,HEX HD- 10-32 X 1.000 LG	
- 70	11598	1	. NUT,HEX- 10-32	
- 71	1801991	1	. SPRING,RETAINING	
- 72	1801989	1	. LEVER	
- 73	322550	1	. SCREW,BD HD- 6-32 X 0.500 LG	ATT PT
- 74	1090394	1	. WASHER,FL- 0.155 ID X 0.312 OD	ATT PT
- 75	1811021	1	. PLATE	
- 76	38235	2	. SCREW,BD HD- 6-32 X 0.312 LG	ATT PT
- 77	1821407	1	. RETAINER,CARRIER	ATT PT
- 78	38387	1	. SCREW,FIL HD- 10-32 X 0.687 LG	ATT PT
- 79	324	1	. WASHER,FL- 0.193 ID X 0.750 OD	ATT PT
- 80	1821408	1	. PLATE,PRESSURE	
- 81	1800487	1	. SPRING,FOLLOWER	
- 82	1810969	1	. FOLLOWER ASSEMBLY	
- 83	104712	1	. PIN	
- 84	38387	1	. SCREW,FIL HD- 10-32 X 0.687 LG	
- 85	324	1	. WASHER,FL- 0.193 ID X 0.750 OD	
- 86	4136975	1	. SPACER	
- 87	5214573	1	. HOUSING,MALE	
- 88	1803793	1	. EMITTER ASSEMBLY	
- 89	106419	1	. SCREW,BD HD- 10-32 X 1.750 LG	ATT PT
- 90	11598	2	. NUT,HEX- 10-32	ATT PT
- 91	2638059	1	. BUMPER	
- 92	1807647	1	. BASE ASSEMBLY,FRONT	

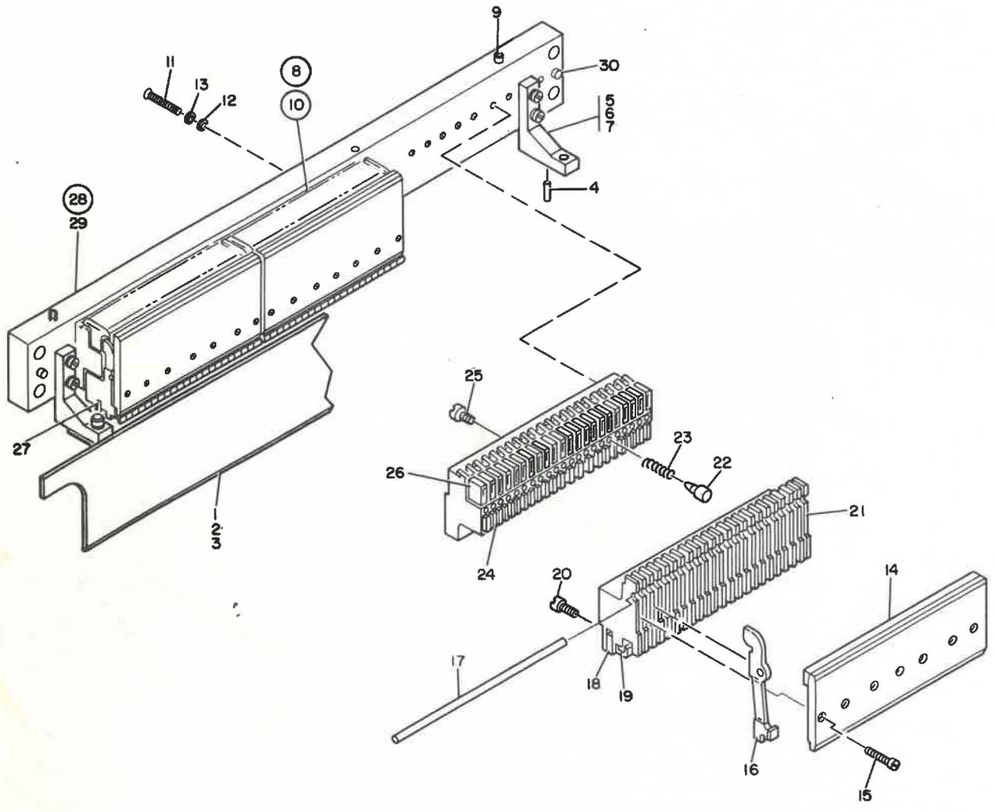

FIGURE 6. HAMMER UNIT ASSEMBLY, MODEL 1. SEE LIST 6.

HAMMER UNIT ASSEMBLY, MODEL 1

FIGURE-INDEX NUMBER	PART NUMBER	UNITS PER ASM.	DESCRIPTION 1 2 3 4	
6 -	6808520 NP	REF	FORMS GUIDE ASSEMBLY-MODEL 1 FOR NEXT HIGHER ASM SEE FIGURE 4-43 FOR ILLUSTRATION SEE FIGURE 6	
- 1	4703276 NR	1	. GUIDE	
- 2	101807	2	. SCREW,SOC HEX HD- 8-32 X 0.625 LG	ATT PT
- 3	22478	2	. WASHER,FL- 0.170 ID X 0.375 OD	ATT PT
- 4	1798805	2	. DOWEL PIN	
- 5	1794627 NR	2	. BRACKET	
- 6	5528	4	. SCREW,BD HD- 8-32 X 0.625 LG	ATT PT
- 7	22478	4	. WASHER,FL- 0.170 ID X 0.375 OD	ATT PT
- 8	1794825	1	. HAMMER UNIT ASM	
- 9	1077739	2	. . PIN	
- 10	1794656	3	. BLOCK ASM	
- 11	10340	9	. . SCREW	ATT PT
- 12	22478	9	. . WASHER,FL- 0.170 ID X 0.375 OD	ATT PT
- 13	1090873	9	. . LCCKWASHER,SPLIT- 0.168 ID X 0.296 OD	ATT PT
- 14	1794800	1	. . . PLATE ASM	
- 15	1794630	7	. . . SCREW,BD HD- 2-56 X 0.470 LG	ATT PT
- 16	1800707	22	. . . LEVER,HAMMER	
- 17	1800718	1	. . . SHAFT,PIVOT	
- 18	1800741	1	. . . BAR,RETAINER	
- 19	1800717	1	. . . BUMPER	
- 20	1800703	22	. . . SCREW,CAP SOC HD- 4-40 X 0.750 LG	
- 21	1794801	1	. . . COMB BAR AND PIN ASM	
- 22	1815359	22	. . . PLUNGER	
- 23	1800704	22	. . . SPRING	
- 24	1815352	1	. . . STATOR BLOCK ASM	
- 25	1132887	2	. . . SCREW,BD HD- 4-40 X 0.531 LG	
- 26	1800796	22	. . . COIL ASSEMBLY,HAMMER	
- 27	1800722	1	. . POSITION INDICATOR	
- 28	1815358	1	. . BAR AND PIN ASM	
- 29	1815357	1	. . . BAR,HAMMER	
- 30	104702	11	. . . PIN	

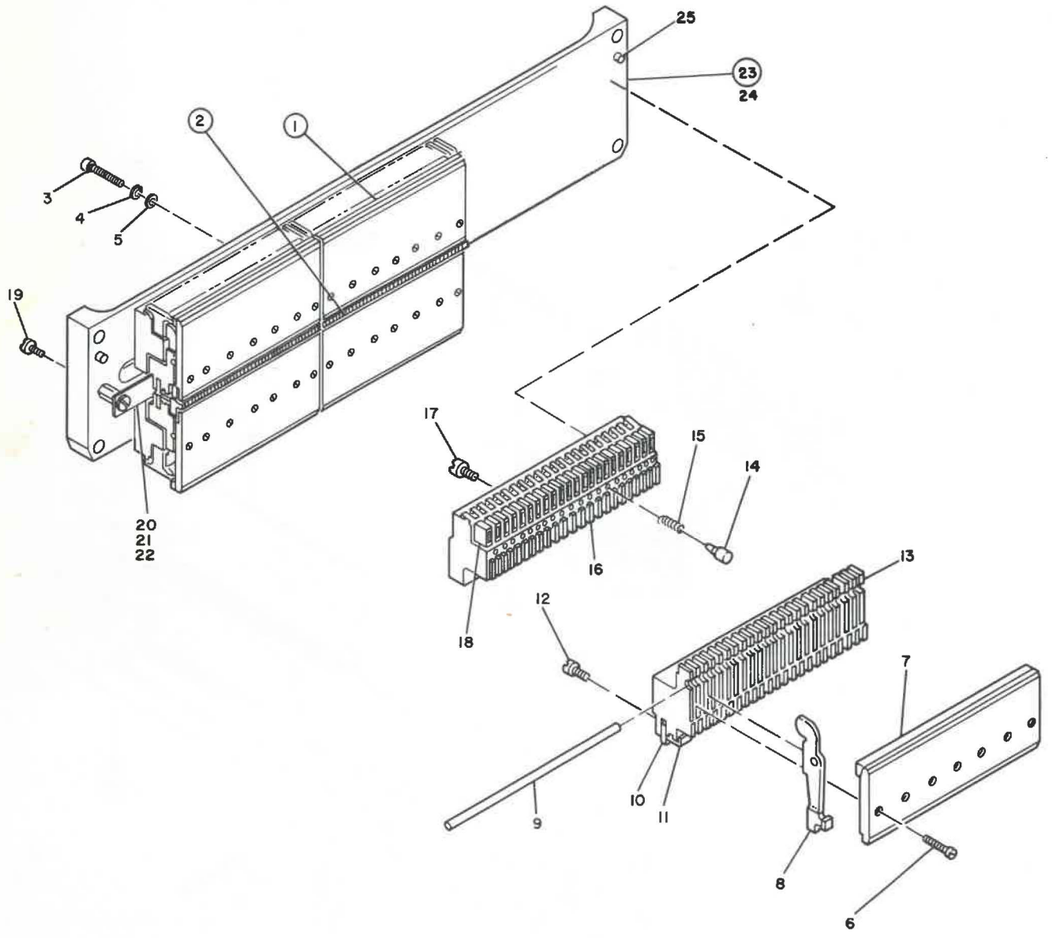

FIGURE 7. HAMMER UNIT ASSEMBLY, MODEL 2. SEE LIST 7.

HAMMER UNIT ASSEMBLY, MODEL 2

FIGURE-INDEX NUMBER	PART NUMBER	UNITS PER ASM.	DESCRIPTION 1 2 3 4	
7 -	1794826	REF	HAMMER UNIT ASSEMBLY, MODEL 2 FOR NEXT HIGHER ASM SEE FIGURE 4-43 FOR ILLUSTRATION SEE FIGURE 7	
- 1	1794845	3	. BLOCK ASM,22 HAMMERS-UPPER	
- 2	1794844	3	. BLOCK ASM,22 HAMMERS-LOWER	
- 3	186931	9	. SCREW,CAP HEX SOC HD- 8-32 X 1.500 LG	ATT PT
- 4	1090873	9	. LOCKWASHER,SPLIT- 0.168 ID X 0.296 OD	ATT PT
- 5	1117437	9	. WASHER,FLAT- 0.171 ID X 0.438 OD	ATT PT
- 6	1794630	7	. . SCREW,BD HD- 2-56 X 0.470 LG	
- 7	1794779	1	. . PLATE ASSEMBLY,UPPER	ATT PT
- 7	1794761	1	. . PLATE ASSEMBLY,LOWER	
- 8	1794815	22	. . HAMMER	
- 9	1800718	1	. . SHAFT,PIVOT	
- 10	1800741	1	. . BAR,RETAINER	
- 11	1815857	1	. . BUMPER	
- 12	1800703	22	. . SCREW,CAP SOC HD- 4-40 X 0.750 LG	
- 13	1815864	1	. . COMB BAR AND PIN ASM	
- 14	1815359	22	. . PLUNGER	
- 15	1800704	22	. . SPRING,COMPRESSION- 15.2 COILS	
- 16	1815352	1	. . STATOR BLOCK ASM	
- 17	1132887	2	. . SCREW,BD HD- 4-40 X 0.531 LG	
- 18	1800796	22	. . COIL ASSEMBLY,HAMMER	
- 19	322552	1	. SCREW,BD HD- 6-32 X 0.875 LG	ATT PT
- 20	55726	1	. SCREW,BD HD- 6-32 X 0.188 LG	
- 21	1815929	1	. SPACER- 6-32 X 0.450 LG	
- 22	1815932	1	. LABEL	
- 23	1815865	1	. BAR AND PIN ASM	
- 24	1815859	1	. . BAR	
- 25	104701	20	. . PIN	

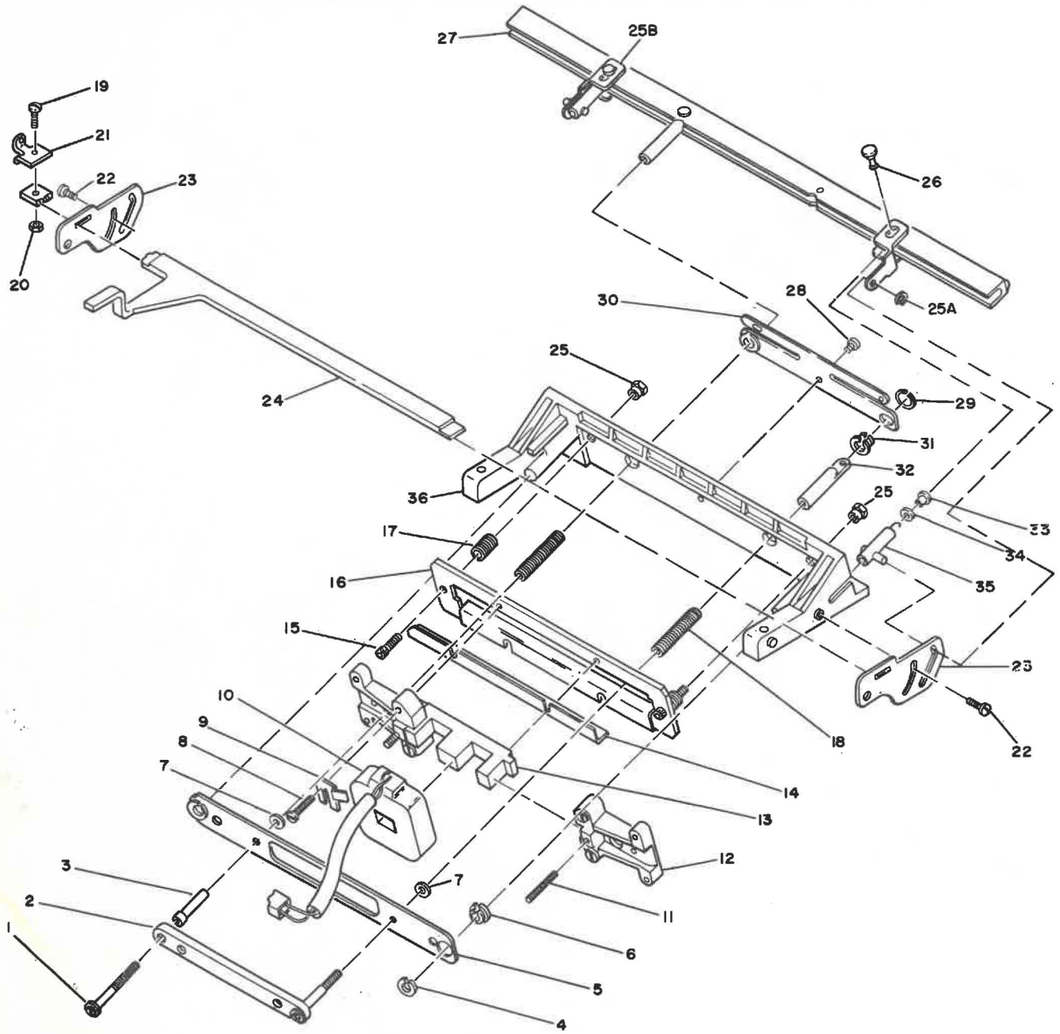

FIGURE 8. CLAMP ASSEMBLY, LOWER. SEE LIST 8.

CLAMP ASSEMBLY, LOWER

FIGURE-INDEX NUMBER	PART NUMBER	UNITS PER ASM.	DESCRIPTION 1 2 3 4	
8 -	1794970	REF	CLAMP ASSEMBLY,LOWER FOR NEXT HIGHER ASM SEE FIGURE 4-61 FOR ILLUSTRATION SEE FIGURE 8	
- 1	1815436	2	. SCREW	ATT PT
- 2	1812536	1	. ARMATURE	
- 3	1815415	2	. FERRULE	
- 4	1814644	2	. KEEPER	
- 5	1814647	1	. LOCATOR	
- 6	828310	2	. BUSHING	
- 7	5820539	2	. SPACER	
- 8	322551	4	. SCREW,BD HD- 6-32 X 0.750 LG	ATT PT
- 9	1794545	1	. KEEPER	
- 10	1812547	1	. COIL ASSEMBLY	
- 11	251762	2	. SCREW	
- 12	1812621	2	. BLOCK	
- 13	1812543	1	. CORE	
- 14	1815434	2	. STIFFENER	
- 15	1794641	2	. SCREW	ATT PT
- 16	1814640	1	. PLATE	
- 17	1815265	2	. SPRING	
- 18	1815433	2	. SPRING	
- 19	38235	1	. SCREW,BD HD- 6-32 X 0.312 LG	ATT PT
- 20	257187	1	. NUT,HEX- 6-32	ATT PT
- 21	1794638	1	. ADAPTOR	
- 22	1154943	2	. SCREW,SELF TAP- 6-20 X 0.500 LG	ATT PT
- 23	1794634	2	. PLATE	
- 24	1794633	1	. LEVER	
- 25	1814641	2	. STUD,ADJUSTMENT	
- 25A	1073418	2	. RETAINER,CRANK	
- 25B	6808528	2	. RETAINER-LIMIT LINK	
- 26	1794632	4	. PIN	ATT PT
- 27	1794636	1	. BAR ASM	
- 28	5784857	1	. SCREW,PAN HD- 6-20 X 0.250 LG	ATT PT
- 29	1814644	2	. KEEPER	
- 30	1814648	1	. LOCATOR	
- 31	828310	2	. BUSHING	
- 32	1794631	2	. PUSHER	
- 33	1794637	2	. SPACER	
- 34	1814642	2	. BUMPER	
- 35	1794969	2	. TUBE ASSEMBLY	
- 36	1794645	1	. BLOCK	

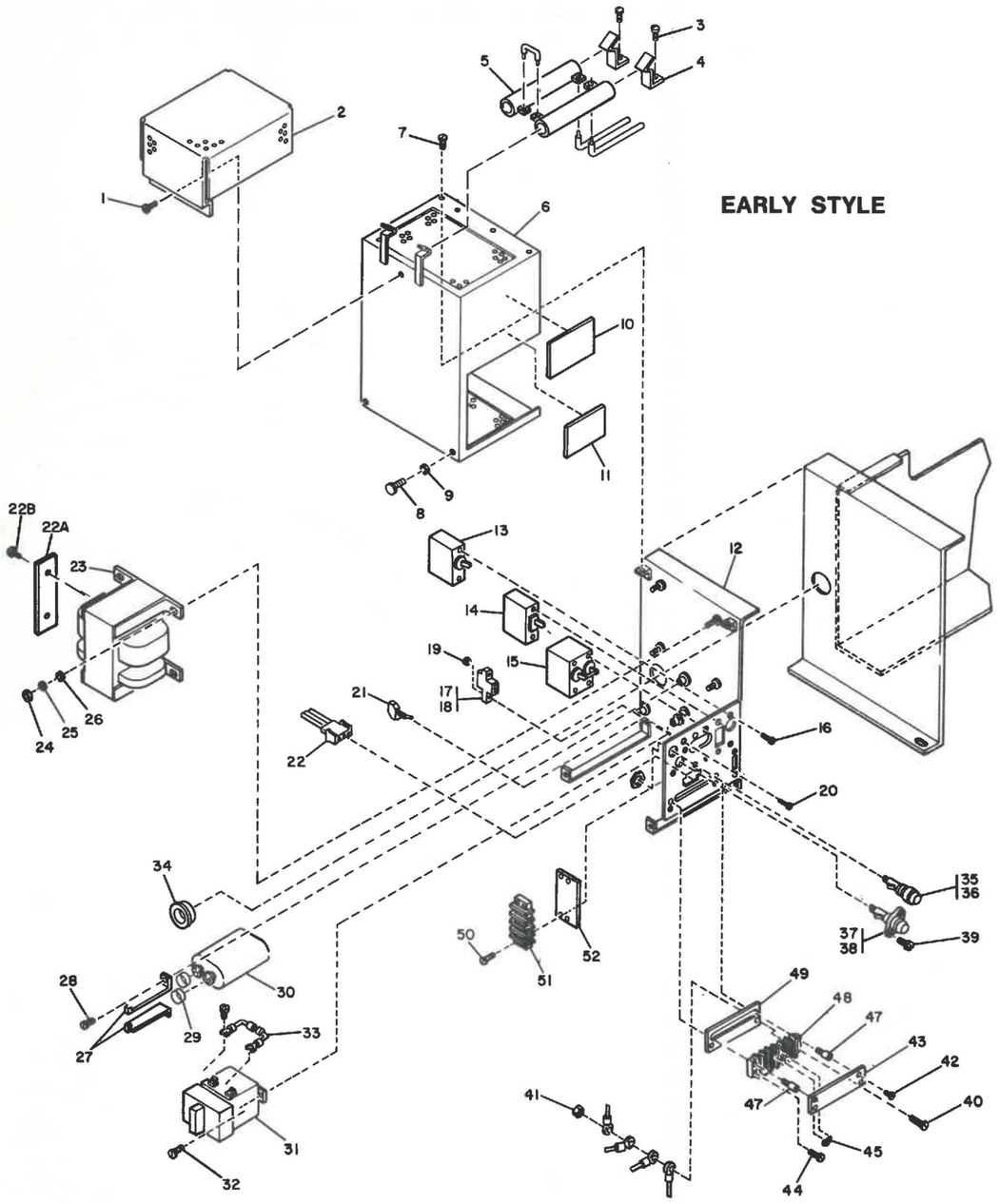

FIGURE 9. TRI-LEVEL POWER SUPPLY ASSEMBLY. SHEET 1 OF 2. INDEX NOS. 1-52. SEE LIST 9.

TRI-LEVEL POWER SUPPLY ASSEMBLY 50/60HZ

FIGURE-INDEX NUMBER	PART NUMBER	UNITS PER ASM.	DESCRIPTION 1 2 3 4	
9 -	4138420	REF	TRI-LEVEL POWER SUPPLY ASSEMBLY-50HZ	
-	4138414	REF	TRI-LEVEL POWER SUPPLY ASSEMBLY-60HZ FOR NEXT HIGHER ASM SEE FIGURE 1-185 FOR ILLUSTRATION SEE FIGURE 9	
- 1	58207	1	. SCREW,BD HD- 8-32 X 0.250 LG	ATT PT
- 2	4135135	1	. RESISTOR SHIELD	
- 3	221790	2	. SCREW,MACH BD HD- 8-32 X 0.187 LG	ATT PT
- 4	2102204	2	. BRACKET	
- 5	212212E	2	. RESISTOR,FXD 10 OHMS P/M 5% 50W	
- 6	4135133	1	. COVER	
- 7	34512	2	. SCREW,BD HD- 8-32 X 0.375 LG	ATT PT
- 8	1074048	2	. SCREW,MACH HEX HD 8-32 X 5/16 LG	ATT PT
- 9	1090873	2	. LOCKWASHER,SPLIT- 0.168 ID X 0.296 OD	ATT PT
- 10	4138421	1	. LABEL,FUSE	
- 11	2542403	1	. LABEL,FUSE WARNING	
- 12	4135132	1	. BASE PLATE	
- 13	2281275	1	. CIRCUIT BREAKER ASM,50 HZ	
- 14	5214000	1	. CIRCUIT BREAKER	
- 15	2574126	1	. CIRCUIT BREAKER	
- 16	55726	8	. SCREW,BD HD- 6-32 X 0.188 LG	ATT PT
- 17	5353851	1	. CONNECTOR	
- 18	5353852	3	. CONTACT,FEMALE	
- 19	257187	2	. NUT,HEX- 6-32	ATT PT
- 20	322065	4	. SCREW,BD HD- 6-32 X 0.625 LG	ATT PT
- 21	5270314	1	. SWITCH	
- 22	1847527	1	. CONNECTOR	
- 22A	5236656	1	. SHIELD	
- 22B	10170	2	. SCREW,BD HD- 6-32 X 0.250 LG	ATT PT
- 23	4119491	1	. TRANSFORMER 50HZ	
- 23	4135143	1	. TRANSFORMER 60HZ	
- 24	11598	4	. NUT,HEX- 10-32	ATT PT
- 25	56079	4	. LOCKWASHER,EXT TEETH- 0.204 ID X 0.410 O	
- 26	45690	4	. WASHER,FL- 0.203 ID X 0.438 OD	
- 27	625955	2	. BRACKET	
- 28	322551	2	. SCREW,BD HD- 6-32 X 0.750 LG	ATT PT
- 29	526378	2	. INSULATOR	
- 30	5252850	1	. CAPACITOR	
- 31	5276701	1	. CONTACTOR,MAGNETIC 24 VDC	
- 32	10170	2	. SCREW,BD HD- 6-32 X 0.250 LG	ATT PT
- 33	2542049	1	. RESISTOR,DIODE ASM WITH SPADE TERMINALS	
- 34	4135138	1	. GROMMET	
- 35	179946	1	. HOLDER,FUSE	
- 36	78999	1	. FUSE	
- 37	104615	1	. FUSEHOLDER	
- 38	107666	1	. FUSE,CRTRGE 15 AMP	ATT PT
- 39	38352	2	. SCREW,BD HD- 6-32 X 0.375 LG	
- 40	438567	1	. SCREW,BD HD- 6-32 X 1.000 LG	
- 41	257187	1	. NUT,HEX- 6-32	ATT PT
- 42	55726	1	. SCREW,BD HD- 6-32 X 0.188 LG	
- 43	337193	1	. SHIELD,TERMINAL BOARD 6 POSITION	
- 44	35739	1	. SCREW,BD HD- 6-32 X 0.438 LG	
- 45	367115	1	. JUMPER	
- 47	210883	2	. STUD	
- 48	502590	1	. BLOCK,TERMINAL- 6 POS	
- 49	8029971	1	. STRIP,MARKER	
- 50	35739	2	. SCREW,BD HD- 6-32 X 0.438 LG	ATT PT
- 51	317485	1	. BLOCK	
- 52	527916	1	. STRIP,MARKER	

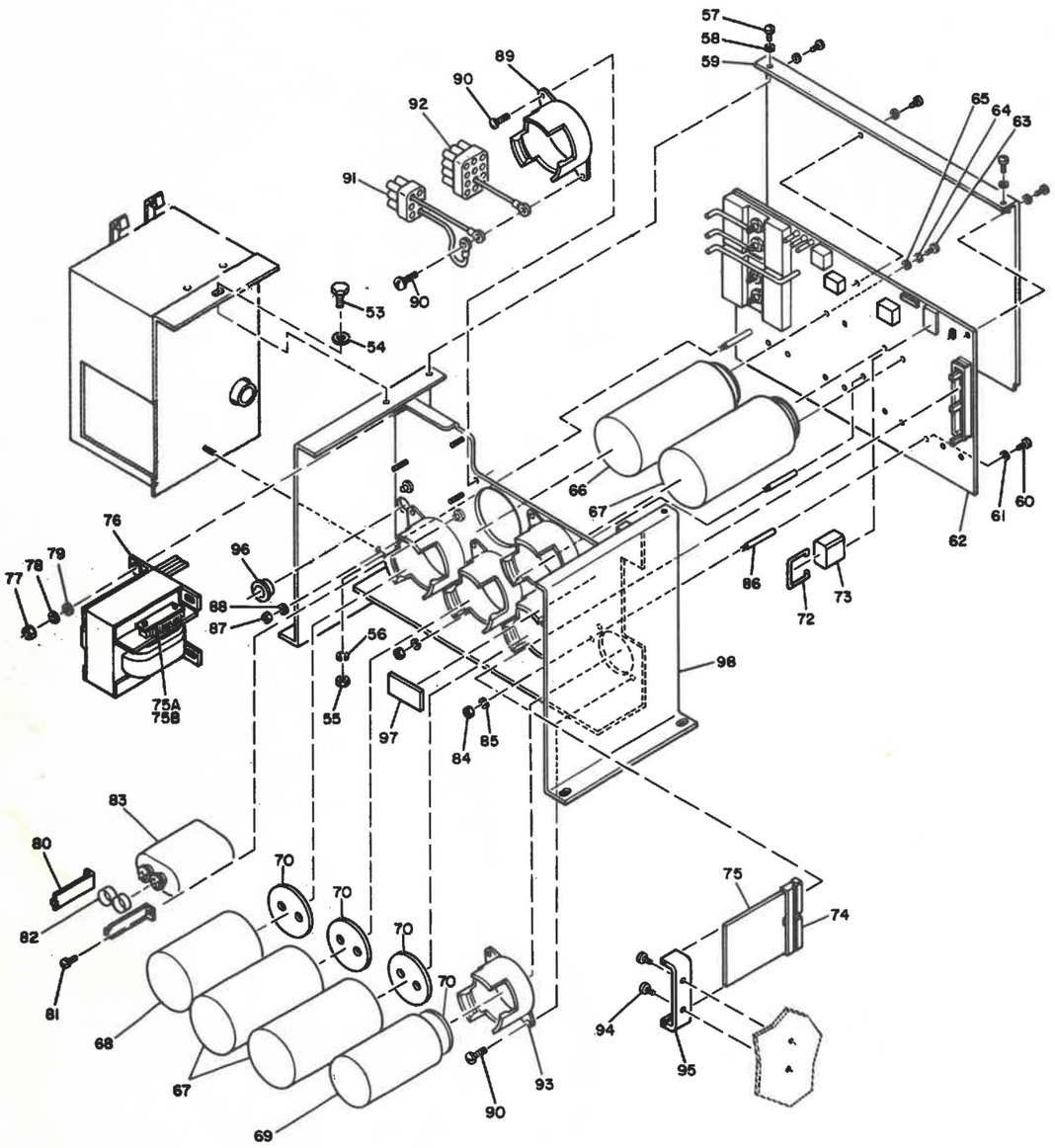

FIGURE 9. TRI-LEVEL POWER SUPPLY ASSEMBLY. SHEET 2 OF 2. INDEX NOS. 53-98. SEE LIST 9.

TRI-LEVEL POWER SUPPLY ASSEMBLY 50/60HZ

FIGURE-INDEX NUMBER	PART NUMBER	UNITS PER ASM.	DESCRIPTION 1 2 3 4	
9 - 53	36844	1	. SCREW,CAP SLOT HD- 1/4-20 X 0.500 LG	ATT PT
- 54	3550	1	. WASHER,FL- 0.250 ID X 0.562 OD	
- 55	36109	1	. NUT,HEX- 1/4-20 THD	ATT PT
- 56	76574	1	. LOCKWASHER,EXT TEETH- 0.256 ID X 0.510 O	
- 57	10170	5	. SCREW,BD HD- 6-32 X 0.250 LG	ATT PT
- 58	257986	5	. WASHER,FL- 0.156 ID X 0.312 OD	ATT PT
- 59	4135134	1	. COVER	
- 60	38235	3	. SCREW,BD HD- 6-32 X 0.312 LG	ATT PT
- 61	257986	3	. WASHER,FL- 0.156 ID X 0.312 OD	ATT PT
- 62	5864584	1	. CONTROL BOARD ASM	
- 63	32042	12	. SCREW,BD HD- 10-32 X 0.375 LG	ATT PT
- 64	56079	12	. LOCKWASHER,EXT TEETH- 0.204 ID X 0.410 O	ATT PT
- 65	45690	12	. WASHER,FL- 0.203 ID X 0.438 OD	
- 66	5252526	1	. CAPACITOR,ELECTROLYIC	
- 67	5252740	3	. CAPACITOR	
- 68	5214505	1	. CAPACITOR	
- 69	5214366	1	. CAPACITOR- 24000 MF,P75M 10%	
- 70	5323562	1	. SHIELD,CAPACITOR	
- 71	631769	5	. SHIELD,CAPACITOR	
- 72	5318966	1	. RETAINER,RELAY	ATT PT
- 73	5318968	1	. RELAY	
- 74	5318968	1	. RELAY	
- 75	8525989	1	. SENSE CARD	
- 75A	5236656	1	. COVER,TERMINAL BLOCK	
- 75B	10170	2	. SCREW,BD HD- 6-32 X 0.250 LG	ATT PT
- 76	4119489	1	. TRANSFORMER 50HZ	
- 76	4135144	1	. TRANSFORMER,60 HZ	
- 77	11598	4	. NUT,HEX- 10-32	ATT PT
- 78	56079	4	. LOCKWASHER,EXT TEETH- 0.204 ID X 0.410 O	ATT PT
- 79	45690	4	. WASHER,FL- 0.203 ID X 0.438 OD	ATT PT
- 80	621446	2	. BRACKET,CAPACITOR MOUNTING	
- 81	322552	2	. SCREW,BD HD- 6-32 X 0.875 LG	ATT PT
- 82	526378	2	. INSULATOR	
- 83	5252839	1	. CAPACITOR	
- 84	257189	3	. NUT,HEX- 8-32	ATT PT
- 85	1090873	3	. LOCKWASHER,SPLIT- 0.168 ID X 0.296 OD	ATT PT
- 86	4135151	3	. STANDOFF	
- 87	36109	1	. NUT,HEX- 1/4-20	ATT PT
- 88	6935	1	. LOCKWASHER,SPLIT- 0.250 ID X 0.493 OD	ATT PT
- 89	4135153	5	. BRACKET	
- 90	34512	12	. SCREW,BD HD- 8-32 X 0.375 LG	ATT PT
- 91	5576689	1	. GROUND CONNECTOR ASM	
- 92	5576690	1	. GROUND CONNECTOR ASM	
- 93	4135152	1	. CLAMP,CAPACITOR	
- 94	10170	2	. SCREW,BD HD- 6-32 X 0.250 LG	ATT PT
- 95	4135142	1	. CARD GUIDE	
- 96	5762057	1	. GROMMET,SNAP BUSHING	
- 97	5240513	1	. P/S LABEL 50HZ	
- 97	801652	1	. P/S LABEL 60HZ	
- 98	4135131	1	. CHASSIS	

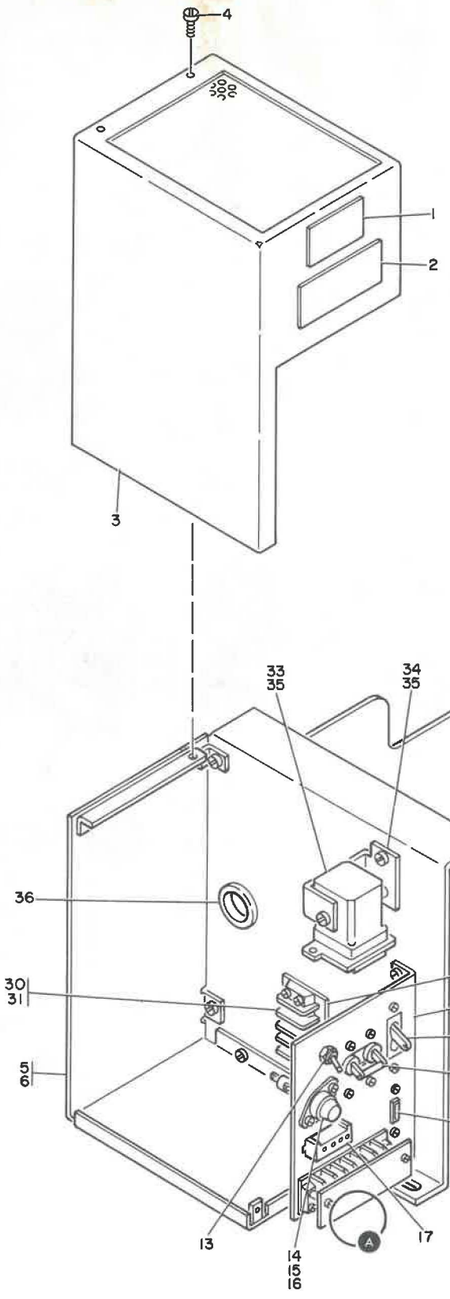

NEW STYLE

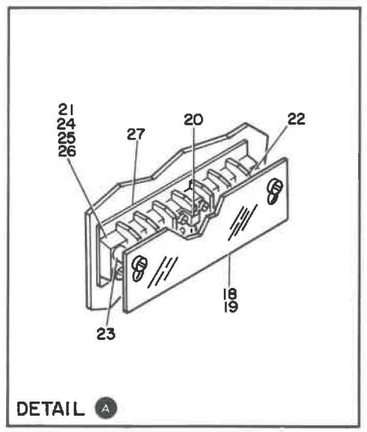

FIGURE 9A. TRI-LEVEL POWER SUPPLY ASSEMBLY. SHEET 1 OF 2. INDEX NOS. 1-36. SEE LIST 9A.

TRI-LEVEL POWER SUPPLY ASSEMBLY 50/60 HZ

FIGURE-INDEX NUMBER	PART NUMBER	UNITS PER ASM.	DESCRIPTION 1 2 3 4	
9A-	5593470	REF	TRI-LEVEL POWER SUPPLY ASSEMBLY 50/60 HZ FOR NEXT HIGHER ASM SEE FIGURE 1-185 FOR ILLUSTRATION SEE FIGURE 9A	
- 1	2542403	1	. LABEL,FUSE WARNING	
- 2	5593492	1	. LABEL,FUSE	
- 3	5593475	1	. COVER	
- 4	316807	3	. SCREW,PH- 6-32 X 0.375 LG	ATT PT
- 5	5593476	1	. COVER,BOTTOM	
- 6	10170	4	. SCREW,BD HD- 6-32 X 0.250 LG	ATT PT
- 7	5214000	1	. CIRCUIT BREAKER	
- 8	2574126	1	. CIRCUIT BREAKER	
- 9	55726	6	. SCREW,BD HD- 6-32 X 0.188 LG	ATT PT
- 10	5593482	1	. CABLE ASM-POWER SUPPLY TO FAN FOR COMPONENT PARTS SEE FIGURE 12	
- 11	322065	2	. SCREW,BD HD- 6-32 X 0.625 LG	ATT PT
- 12	257187	2	. NUT,HEX- 6-32	ATT PT
- 13	5270314	1	. SWITCH	
- 14	107666	1	. FUSE,CRTRGE 15 AMP	
- 15	104615	1	. FUSEHOLDER	
- 16	38352	2	. SCREW,BD HD- 6-32 X 0.375 LG	ATT PT
- 17	5593483	1	. CABLE ASM-POWER SUPPLY TO TRANSFORMER FOR COMPONENT PARTS SEE FIGURE 12	
- 18	337193	1	. SHIELD,TERMINAL BOARD 6 POSITION	
- 19	55726	2	. SCREW,BD HD- 6-32 X 0.188 LG	ATT PT
- 20	367115	1	. JUMPER,TERMINAL STRIP	
- 21	502590	1	. BLOCK,TERMINAL- 6 POS	
- 22	210883	1	. STUD	ATT PT
- 23	210884	1	. STUD	ATT PT
- 24	35739	1	. SCREW,BD HD- 6-32 X 0.438 LG	ATT PT
- 25	438567	1	. SCREW,BD HD- 6-32 X 1.000 LG	ATT PT
- 26	257187	1	. NUT,HEX- 6-32	ATT PT
- 27	8029971	1	. STRIP,MARKER	
- 28	5593485	1	. PANEL-PRIMARY POWER	
- 29	10170	2	. SCREW,BD HD- 6-32 X 0.250 LG	ATT PT
- 30	4703277	1	. BLOCK,TERMINAL	
- 31	322550	4	. SCREW,BD HD- 6-32 X 0.500 LG	ATT PT
- 32	527916	1	. STRIP,MARKER	
- 33	2242321	1	. RELAY	
- 34	5593479	1	. BRACKET	
- 35	10170	3	. SCREW,BD HD- 6-32 X 0.250 LG	ATT PT
- 36	4135138	1	. GROMMET	

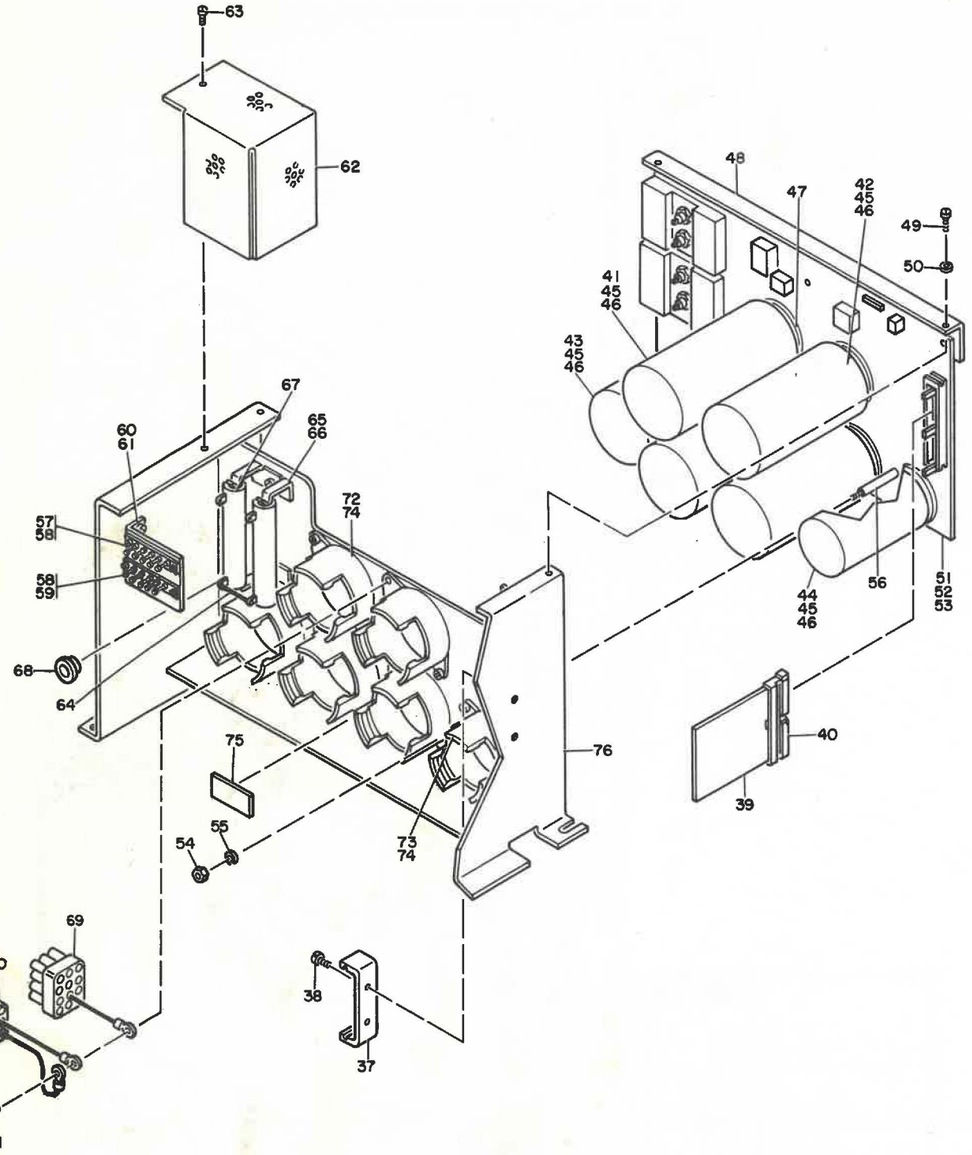

FIGURE 9A. TRI-LEVEL POWER SUPPLY ASSEMBLY. SHEET 2 OF 2. INDEX NOS. 37-76. SEE LIST 9A.

TRI-LEVEL POWER SUPPLY ASSEMBLY 50/60 HZ

FIGURE-INDEX NUMBER	PART NUMBER	UNITS PER ASM.	DESCRIPTION 1 2 3 4	
9A- 37	4135142	1	. CARD GUIDE	
- 38	10170	2	. SCREW,BD HD- 6-32 X 0.250 LG	ATT PT
- 39	8525969	1	. SENSE CARD	
- 40	811804	1	. GUIDE,CARD	
- 41	5252526	1	. CAPACITOR,ELECTROLYIC	
- 42	5252740	3	. CAPACITOR	
- 43	5214505	1	. CAPACITOR	
- 44	5214073	1	. CAPACITOR	
- 45	32042	12	. SCREW,BD HD- 10-32 X 0.375 LG	ATT PT
- 46	2125974	12	. SPACER	ATT PT
- 47	631769	5	. SHIELD,CAPACITOR	
- 47	5325562	1	. SHIELD,CAPACITOR-USED WITH CAP 5214073	
- 48	5593477	1	. BRACKET	
- 49	10170	5	. SCREW,BD HD- 6-32 X 0.250 LG	ATT PT
- 50	257986	5	. WASHER,FL- 0.156 ID X 0.312 OD	ATT PT
- 51	5593490	1	. BOARD ASM	
- 52	38235	3	. SCREW,BD HD- 6-32 X 0.312 LG	ATT PT
- 53	257986	3	. WASHER,FL- 0.156 ID X 0.312 OD	ATT PT
- 54	1090873	3	. LOCKWASHER,SPLIT- 0.168 ID X 0.296 OD	ATT PT
- 55	257189	3	. NUT,HEX- 8-32	ATT PT
- 56	4135151	3	. STANDOFF	
- 57	5593488	1	. CABLE ASM-TEST POINT	
- 58	5593489	1	. CABLE ASM-TEST POINT FOR COMPONENT PARTS SEE FIGURE 12A	
- 59	438548	4	. SCREW,BD HD- 4-40 X 0.188 LG	ATT PT
- 60	5593486	1	. BRACKET-TEST POINT MOUNTING	
- 61	10170	2	. SCREW,BD HD- 6-32 X 0.250 LG	ATT PT
- 62	5593478	1	. COVER,RESISTOR	
- 63	38235	1	. SCREW,BD HD- 6-32 X 0.312 LG	ATT PT
- 64	103079	1	. WIRE BARE	
- 65	5593484	2	. BRACKET	
- 66	38235	2	. SCREW,BD HD- 6-32 X 0.312 LG	ATT PT
- 67	2122128	2	. RESISTOR,FXD 10 OHMS P/M 5% 50W	
- 68	4135138	1	. GROMMET	
- 69	5576690	1	. GROUND CONNECTOR ASM	
- 70	5576689	1	. GROUND CONNECTOR ASM	
- 71	81693	1	. SCREW,BD HD- 6-32 X 0.375 LG	
- 72	4135153	5	. CLAMP	
- 73	4135152	1	. CLAMP USED WITH SHIELD 5323562	
- 74	81693	11	. SCREW,BD HD- 6-32 X 0.375 LG	ATT PT
- 75	801652	1	. LABEL	
- 76	5593474	1	. CHASSIS	

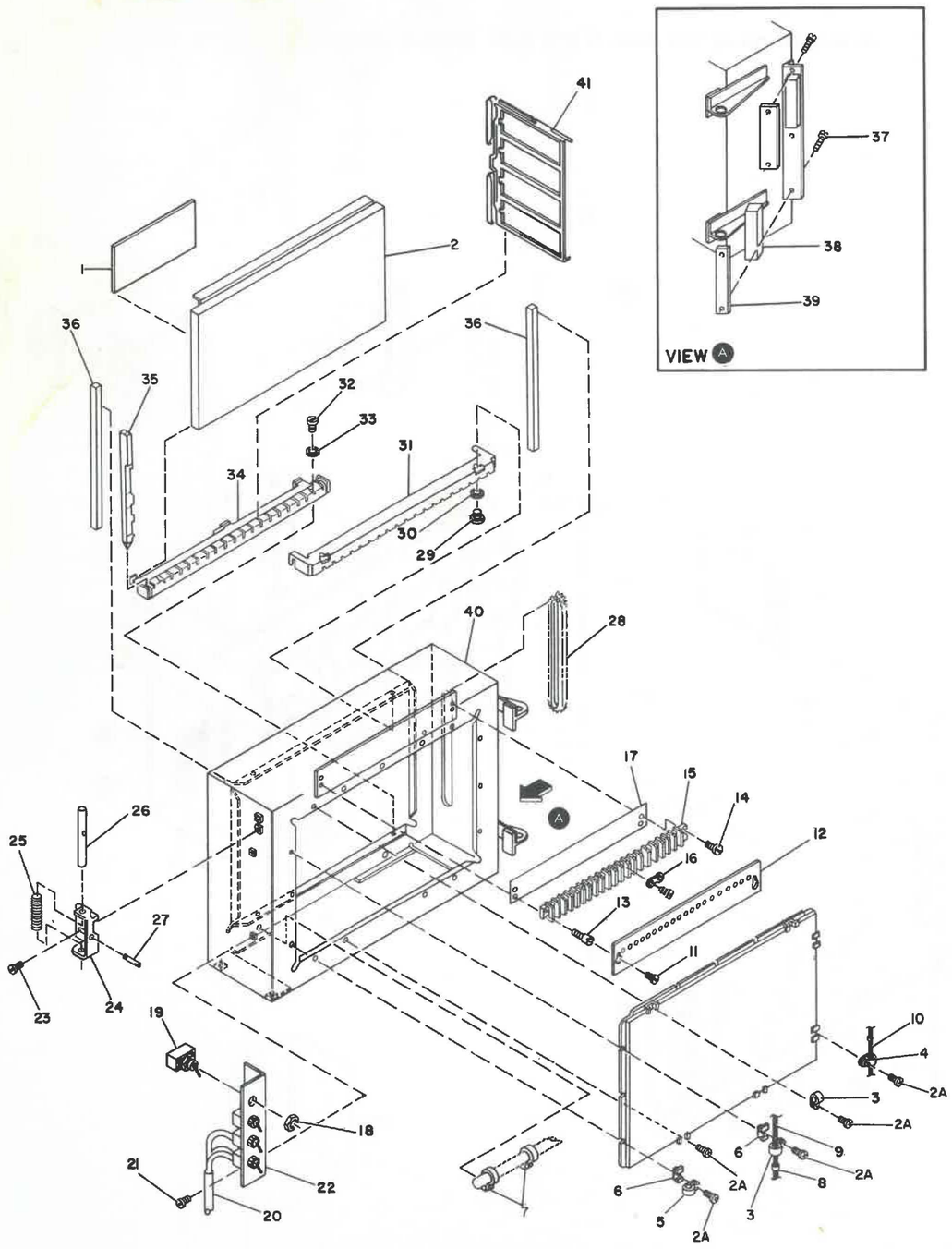

FIGURE 10. LOGIC CHASSIS ASSEMBLY. SEE LIST 10.

LOGIC CHASSIS ASSEMELY

FIGURE-INDEX NUMBER	PART NUMBER	UNITS PER ASM.	DESCRIPTION 1 2 3 4
10 -	1819740	REF	LOGIC CHASSIS ASSEMELY FOR NEXT HIGHER ASSEMBLY SEE FIGURE 2-66 FOR ILLUSTRATION SEE FIGURE 10
- 1	2648906	1	. LABEL
- 2	6808541	1	. COVER ASM
- 2A	811417	8	. SCREW,HEX SOCKET HD 6-32 X 0.500 LG
- 3	804109	4	. CLAMP
- 4	2102364	1	. CLAMP
- 5	2102364	1	. CLAMP
- 6	813179	8	. CLAMP
- 7	2162907	2	. CLAMP
- 8	524519	8	. TIE,CABLE
- 9	4138334	1	. CABLE ASM FOR COMPONENT PARTS SEE FIGURE 12
- 10	5576691	1	. CABLE ASM FOR COMPONENT PARTS SEE FIGURE 12
- 11	10170	2	. SCREW
- 12	5824095	1	. COVER
- 13	210883	2	. STUD
- 14	322550	2	. SCREW
- 15	253220	1	. TERMINAL STRIP
- 16	367115	12	. TERMINAL STRAP
- 17	242260	1	. MARKER STRIP
- 18	179743	4	. NUT,HEX,TOGGLE SW HLDG-0.469-32
- 19	738827	4	. SWITCH
- 20	5593453	1	. CABLE ASM FOR COMPONENT PARTS SEE FIGURE 12
- 21	58207	2	. SCREW
- 22	4135069	1	. BRACKET
- 23	34512	2	. SCREW
- 24	1796730	1	. HOUSING
- 25	220856	1	. SPRING
- 26	204499	1	. PIN,GATE LATCH
- 27	204500	1	. STUD- 8-32 X 1.375 LG
- 28	825880	1	. TAPE,FOAM
- 29	811417	2	. SCREW
- 30	257986	2	. WASHER
- 31	819268	1	. UPPER GUIDE
- 32	811417	2	. SCREW
- 33	257986	2	. WASHER
- 34	819269	1	. LOWER GUIDE
- 35	819284	2	. INTERMIX BRACKETS
- 36	817905	2	. SEAL
- 37	186933	4	. SCREW
- 38	5593416	4	. MAT
- 39	5593415	2	. PLATE
- 40	1819766	1	. PLATE
- 41	818002	AR	. GUIDE,CARD- 3 HIGH 2 WIDE
- 41	819408	AR	. GUIDE,CARD- 3 HIGH 4 WIDE
- 41	2766709	AR	. GUIDE,CARD- 3 HIGH 4 WIDE WITH TCP CONN

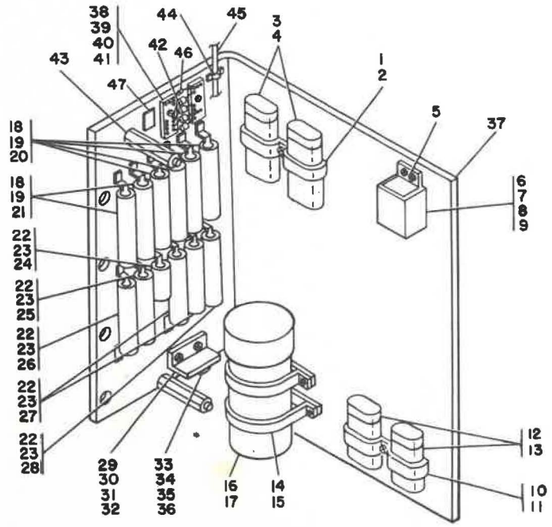

FIGURE 11. POWER PLATE ASSEMBLY. SEE LIST 11.

POWER PLATE ASSEMBLY

FIGURE-INDEX NUMBER	PART NUMBER	UNITS PER ASM.	DESCRIPTION 1 2 3 4
11 -	1819731	REF	POWER PLATE ASSEMBLY FOR NEXT HIGHER ASSEMBLY SEE FIGURE 2-83 FOR ILLUSTRATION SEE FIGURE 11
- 1	58207	1	. SCREW,BD HD- 8-32 X 0.250 LG
- 2	1811047	1	. CLAMP
- 3	5252809	6	. CAPACITOR,8.0 MFD
- 4	363001	1	. BOOT
- 5	58207	2	. SCREW,BD HD- 8-32 X 0.250 LG
- 6	1811048	1	. BRACKET,SWITCH
- 7	2410111	1	. RELAY, 245 OHMS 24VDC
- 8	52684	4	. SCREW,RD HD- 3-48 X 0.125 LG
- 9	1812598	1	. COVER
- 10	166759	1	. SCREW,BD HD- 8-32 X 0.312 LG
- 11	4703211	1	. CLAMP
- 12	5252810	1	. CAPACITOR,PAPER AC- 10 MFD 330 VACW
- 13	363001	1	. BOOT
- 14	58207	2	. SCREW,BD HD- 8-32 X 0.250 LG
- 15	4135005	2	. CLAMP
- 16	5252740	1	. CAPACITOR
- 17	4135099	1	. COVER
- 18	58207	1	. SCREW,BD HD- 8-32 X 0.250 LG
- 19	510316	2	. BRACKET
- 20	5615309	1	. RESISTOR
- 21	5615879	1	. RESISTOR
- 22	58207	2	. SCREW,BD HD- 8-32 X 0.250 LG
- 23	510316	2	. BRACKET
- 24	507142	1	. RESISTOR,100 OHMS 25W
- 25	5615311	1	. RESISTOR
- 26	5615311	1	. RESISTOR
- 27	5615309	1	. RESISTOR
- 28	5615592	1	. RESISTOR
- 29	34512	2	. SCREW,BD HD- 8-32 X 0.375 LG
- 30	1819757	1	. BRACKET
- 31	300606	2	. WASHER,INSULATING- 0.169 ID X 0.437 OD
- 32	1073412	2	. INSULATOR
- 33	81693	2	. SCREW,BD HD- 6-32 X 0.375 LG
- 34	62031	2	. LOCKWASHER,INT TEETH- 0.150 ID X0.295 OD
- 35	257187	2	. NUT,HEX- 6-32
- 36	369649	1	. SEMICONDUCTOR DEVICE,DIODE TYPE FN
- 37	1819730	1	. PLATE
- 38	438549	2	. SCREW,BD HD- 4-40 X 0.437 LG
- 39	205331	3	. JUMPER
- 40	302131	2	. STRIP,INSULATOR 2.094 LG
- 41	302090	2	. BLOCK,TERMINAL
- 42	639292	4	. RESISTOR,WIREWOUND- 100 OHMS 10W
- 43	801731	2	. HEX STANDOFF
- 44	524519	3	. TIE,CABLE
- 45	1815152	1	. CABLE ASM FOR COMPONENT PARTS SEE FIGURE 12
- 46	615354	1	. DIODE ASSEMBLY,AM
- 47	5593422	1	. LABEL

CABLE AND JUMPER ASM COMPONENT PARTS

FIGURE-INDEX NUMBER	PART NUMBER	UNITS PER ASM.	DESCRIPTION 1 2 3 4
12 -	1815065	REF	CABLE ASM, AC I/O FOR COMPONENT PARTS SEE INDEXES -6 AND -24
-	1815066	REF	CABLE ASM, DC I/O FOR COMPONENT PARTS SEE INDEXES -8,-9, -10,-11 AND -18
-	1815152	REF	CABLE ASM, DC TO MOTORS FOR COMPONENT PARTS SEE INDEXES 3,3A,4, -7,-8,-9,-12,-13,-15,-16,-17,-18,-20, -21,-22,-23,-27,-31,-32,-36,-57 AND -58
-	1819739	REF	CABLE ASM, CORD-ATTACHMENT FOR COMPONENT PARTS SEE INDEXES -10 AND -28
-	4134969	REF	CABLE ASM, AC SW TO POWER SUPPLY FOR COMPONENT PARTS SEE INDEX -8
-	4134970	REF	CABLE ASM, DC INTERNAL +24V,+8.5V,+5VDC FOR COMPONENT PARTS SEE INDEXES -8, -9,-25,-26 AND -59
-	4135102	REF	CABLE ASM, POWER SUPPLY SIGNAL FOR COMPONENT PARTS SEE INDEXES -16, -19,-29,-35,-36,-48 AND -71
-	4138334	REF	CABLE ASM FOR COMPONENT PARTS SEE INDEXES -37, -38,-39,-40,-41,-42 AND -43
-	4138336	REF	CABLE ASM, PS TO GATE FAN FOR COMPONENT PARTS SEE INDEXES -24, -33 AND -34
-	4138338	REF	CABLE ASM, AC LINE FLR TO PS FOR COMPONENT PARTS SEE INDEXES -8 AND -10
-	5576641	REF	CABLE ASM, CONVENIENCE OUTLET 60HZ FOR COMPONENT PARTS SEE INDEXES -1, -2,-8,-14,-51,-74,-75,-76 AND -77
-	5576678	REF	CABLE ASM, CORD-ATTACHMENT-WTC FOR COMPONENT PARTS SEE INDEX -10
-	5576689	REF	GROUND CONNECTOR ASM 8.5V AND 5V FOR COMPONENT PARTS SEE INDEXES -25 AND -30
-	5576690	REF	GROUND CONNECTOR ASM 25V AT 15A FOR COMPONENT PARTS SEE INDEXES -26 AND -30
-	5576691	REF	CABLE ASM FOR COMPONENT PARTS SEE INDEX -8
-	1815149	REF	CABLE ASM, HAMMER MAGNETS-UPPER BANK FOR COMPONENT PARTS SEE INDEXES -3A,-45,-46,-47,-48,-49 AND -50
-	1815150	REF	CABLE ASM, HAMMER MAGNETS-LOWER BANK FOR COMPONENT PARTS SEE INDEXES -3A,-45 -46,-47,-48,-49 AND -50
-	1815151	REF	CABLE ASM, SIGNAL FOR COMPONENT PARTS SEE INDEXES -3,-16, -31,-35,-36,-53,-54,-55 AND -56
-	4134971	REF	CABLE ASM, SIGNAL I/C FOR COMPONENT PARTS SE56INDEXES -16,-17, -36,-58,-60,-61,-62,-63,-64,-65,-66,-67, -68,-69 AND -70
-	4135130	REF	CABLE ASM, CORD-ATTACHMENT-1828.8 FOR COMPONENT PARTS SEE INDEXES -10, AND -28
-	5576620	REF	CABLE ASM, OP PANEL TO LOGIC GATE FOR COMPONENT PARTS SEE INDEXES -16,-17, -19,-32,-36,-54 AND -71
-	5576687	REF	CABLE ASM,OUTLET-50 HZ FOR COMPONENT PARTS SEE INDEXES -1,-2, -8,-12,-51,-52,-72,-74 AND -75
-	5593412	REF	CABLE ASM,HAMMER UNIT 25 VOLT FOR COMPONENT PARTS SEE INDEXES -9 AND -11
-	5593453	REF	CABLE ASM,FE SWITCHES FOR COMPONENT PARTS SEE INDEXES -17,-32, -36,-54 AND -73
-	5593482	REF	CABLE ASM-FAN TO POWER SUPPLY FOR COMPONENT PARTS SEE INDEXES -7A,-18 -33A AND -34A
-	5593483	REF	CABLE ASM-TRANSFORMER TO POWER SUPPLY FOR COMPONENT PARTS SEE INDEXES -11A,-18 AND -24A

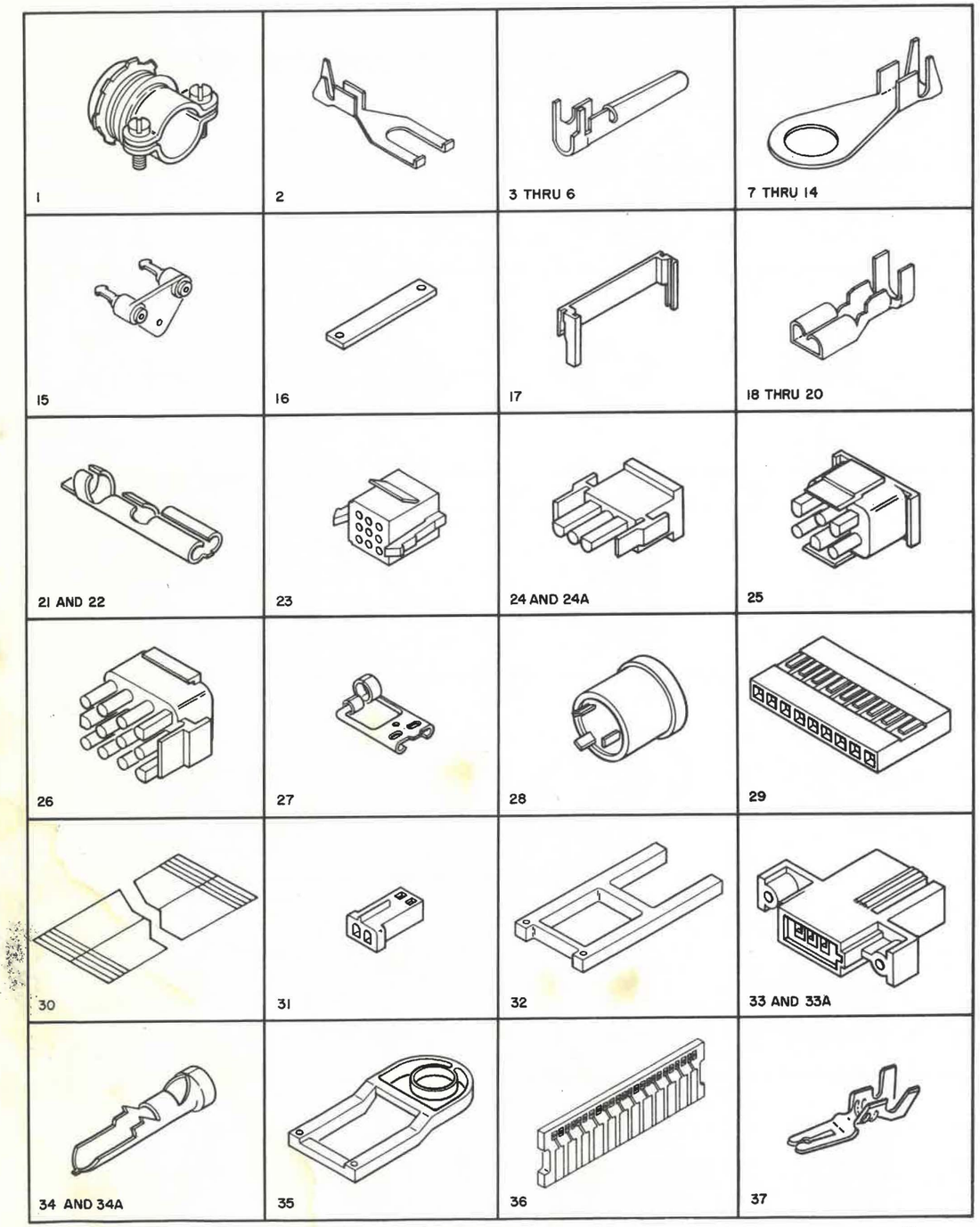

FIGURE 12. CABLE AND JUMPER ASSEMBLY COMPONENT PARTS. SHEET. 1 OF 3. INDEX NOS. 1-37. SEE LIST 12.

CABLE AND JUMPER ASM COMPONENT PARTS

FIGURE-INDEX NUMBER	PART NUMBER	UNITS PER ASM.	DESCRIPTION 1 2 3 4
12 -	5593488	REF	CABLE ASM-TEST POINT FOR COMPONENT PARTS SEE INDEXES -44 AND -54
-	5593489	REF	CABLE ASM-TEST POINT FOR COMPONENT PARTS SEE INDEXES -44 AND -54
- 1	151598	AR	. CLAMP
- 2	483652	AR	. TERMINAL,FLANGED SPADE- 14-16AWG
- 3	483657	AR	. TERMINAL,TAPER PIN
- 3A	483658	AR	. TERMINAL,TAPER PIN 18-20 AWG
- 4	483659	AR	. TERMINAL,TAPER PIN- 22-26AWG
- 5	1847521	AR	. TERMINAL,SOCKET
- 6	1471019	AR	. TERMINAL,TAPER PIN
- 7	483676	AR	. TERMINAL,RING- 22-26 AWG
- 7A	483677	AR	. TERMINAL,RING, NO.6 STUD,18-20 AWG
- 8	483678	AR	. TERMINAL,RING 14-16 AWG
- 9	483679	AR	. TERMINAL,RING 10-12 AWG
- 10	483682	AR	. TERMINAL,RING 14-16 AWG
- 11	483683	AR	. TERMINAL,RING 10-12 AWG
- 11A	483685	AR	. TERMINAL,RING, NO.10 STUD,18-20 AWG
- 12	483686	AR	. TERMINAL,RING 14-16 AWG
- 13	483687	AR	. TERMINAL,RING 10-12 AWG
- 14	483689	AR	. TERMINAL,RING- 14-16AWG
- 15	725506	AR	. SOCKET,TRANSISTOR
- 16	740459	AR	. STIFFENER
- 17	811802	AR	. CARD GUIDE
- 18	1127037	AR	. TERMINAL,WIRE
- 19	2637682	AR	. CONNECTOR,WIRE (22 26 AWG)
- 20	430799	AR	. RECEPTACLE-TERMINAL
- 21	1166115	AR	. SOCKET
- 22	5412817	AR	. TERMINAL
- 23	1166498	AR	. HOUSING
- 24	1847526	AR	. CONNECTOR
- 24A	1847529	AR	. CONNECTOR-4 POSITION
- 25	1847530	AR	. PLUG
- 26	1847534	AR	. PLUG
- 27	2162590	AR	. TERMINAL,FLAG FAST
- 28	2594759	AR	. CONNECTOR
- 29	2731852	AR	. HOUSING
- 30	4135136	AR	. LABEL,CONNECTOR
- 31	5214572	AR	. HOUSING,CONNECTOR- FEMALE
- 32	2744813	AR	. INSULATOR
- 33	5353853	AR	. HOUSING,CONNECTOR
- 33A	5353851	AR	. HOUSING,CONNECTOR
- 34	5353854	AR	. CONTACT,SALE 16-20 WIRE
- 34A	5353852	AR	. CONTACT,SALE
- 35	4124485	AR	. STRAIN RELEIF
- 35	5353922	AR	. STRAIN REL
- 36	5800634	AR	. CARD ASM
- 37	813194	AR	. TERMINAL

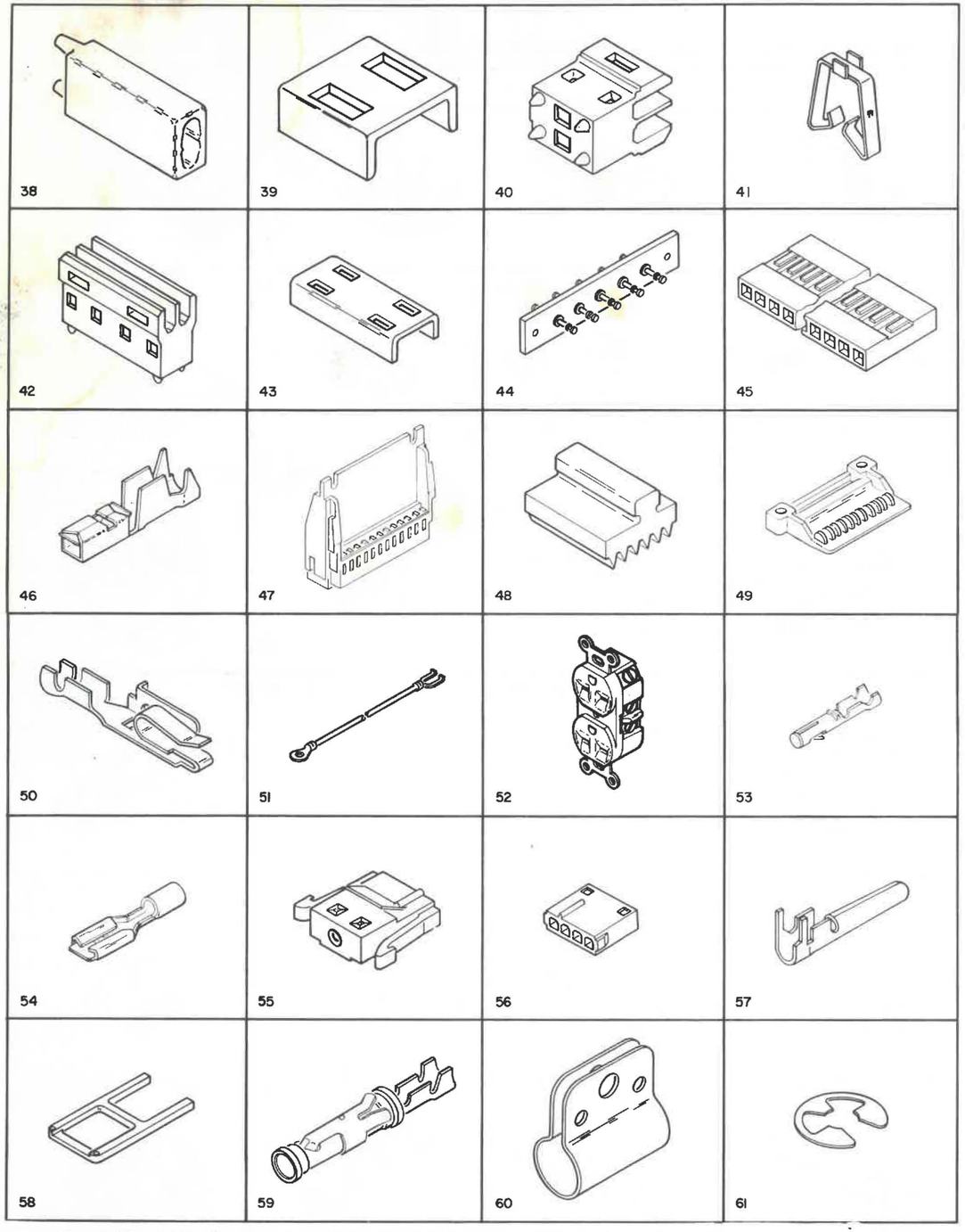

FIGURE 12. CABLE AND JUMPER ASSEMBLY COMPONENT PARTS. SHEET 2 OF 3. INDEX NOS. 38-61. SEE LIST 12.

CABLE AND JUMPER ASSY COMPONENT PARTS

FIGURE-INDEX NUMBER	PART NUMBER	UNITS PER ASM.	DESCRIPTION 1 2 3 4
12 - 38	813197	AR	. HOUSING
- 39	813549	AR	. COVER
- 40	813550	AR	. HOUSING
- 41	813681	AR	. CONTACT
- 42	813801	AR	. HOUSING
- 43	813802	AR	. COVER,VOLTAGE CROSSOVER
- 44	5593487	AR	. STRIP,TURRET
- 45	1800735	AR	. HOUSING
- 46	1794724	AR	. TERMINAL
- 47	5447741	AR	. HOUSING,SINGLE HI
- 48	5466393	AR	. CLAMP,STRAIN RELIEF
- 49	5466397	AR	. STRAIN RELIEF
- 50	5486851	AR	. CONTACT,SERPENT-SINGLE HI,22-26 BNG
- 53	2513254	AR	. TERMINAL,SOCKET- 30-32 AWG
- 54	236916	AR	. TERMINAL,CONTACT- FEMALE 24-22 AWG
- 55	1166116	AR	. HOUSING
- 56	1812491	AR	. HOUSING,FEMALE CONTACTS
- 57	483661	AR	. TERMINAL
- 58	2744614	AR	. STRAIN RELIEF
- 59	1471028	AR	. CONTACT
- 60	4037302	AR	. CLAMP
- 61	264641	AR	. RING,RETAINING EXT 0.114 ID X 0.025 THK

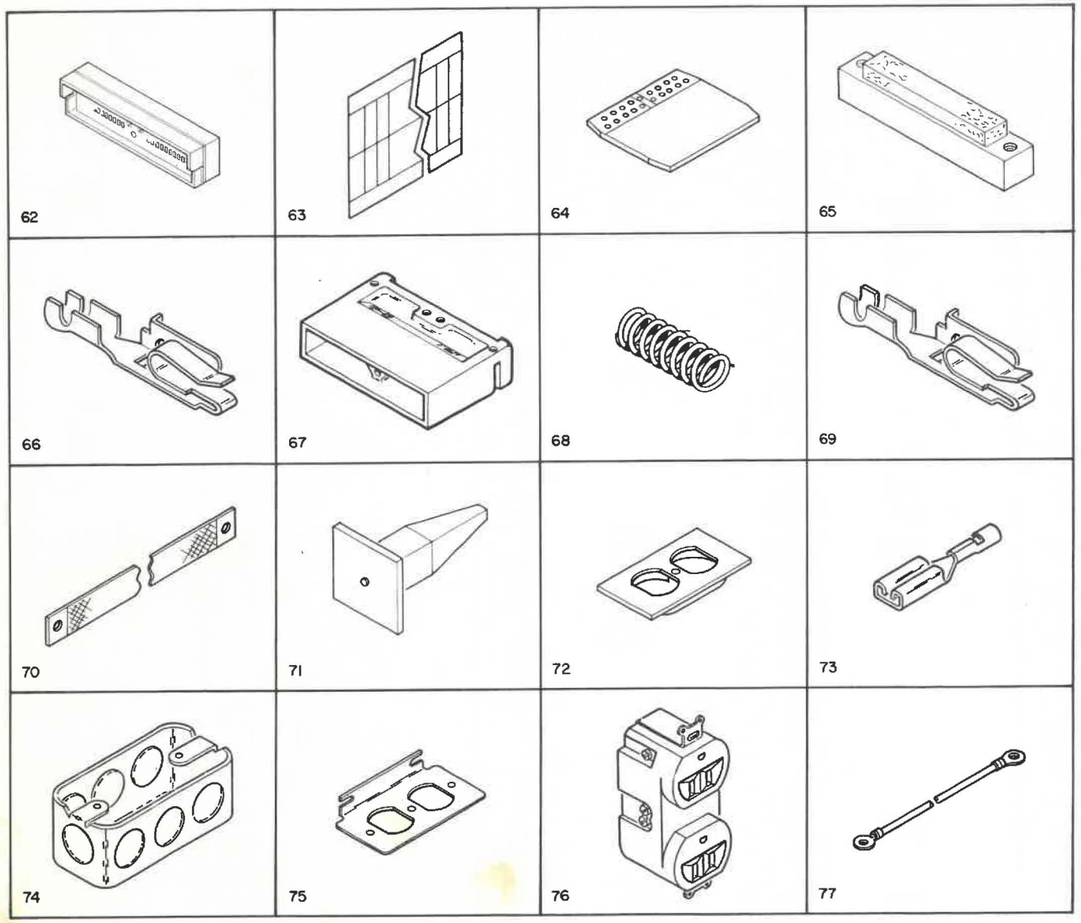

FIGURE 12. CABLE AND JUMPER ASSEMBLY COMPONENT PARTS. SHEET 3 OF 3. INDEX NOS. 62-77. SEE LIST 12.

CABLE AND JUMPER ASM COMPONENT PARTS

FIGURE-INDEX NUMBER	PART NUMBER	UNITS PER ASM.	DESCRIPTION 1 2 3 4
12 - 62	5353868	AR	. CONNECTOR BLOCK,B-STYLE
- 63	483770	AR	. LABEL
- 64	5353880	AR	. CARD,SHIELD COMMONING
- 65	5353896	AR	. RELIEF ASSEMBLY,STRAIN
- 66	5362301	AR	. CONTACT,LARGE SERPENT,22-26 WIRE RANGE
- 67	5362306	AR	. COVER,CONNECTOR BLOCK
- 68	1105806	AR	. SPRING
- 69	5404480	AR	. CONTACT,GREAT SNAKE,18-20 WIRE RANGE
- 70	2101840	AR	. STRAP
- 71	2637689	AR	. INSERT
- 74	194355	AR	. OUTLET BOX
- 75	4703239	AR	. BRACKET
- 76	357995	AR	. OUTLET,CONV 115V 60 HZ
- 77	1993937	AR	. JUMPER ASM

NUMERICAL INDEX

PART NO.	LIST AND INDEX NO.
119	1 - 3D
195	3 - 7
	3 - 48
324	2 - 2
	5 - 79
	5 - 85
845	4 - 22
1940	1 - 3
	1 - 7
	1 - 39
	1 - 45
	1 - 49
	1 - 53A
	1 - 56
	1 - 76
	1 - 80
	1 - 84
	1 - 85
	1 -122
	1 -126
	1 -130
	1 -131
	1 -137
	1 -137E
	1 -141
	1 -155
	1 -162
	1 -189
	1 -192
	1 -198
	1 -202
	1 -203
	1 -209
	1 -230
	1 -233
	1 -239
	1 -243
	1 -244
	2 - 27
	2 - 36
	2 - 40
	2 - 44
	2 - 48
	2 - 55
	2 - 61
	2 - 77
	2 - 81
	2 - 89
	2 - 97
	2 -133
	2 -142
	2 -147
	2 -157
	2 -161
	2 -165
	3 -116C
2031	4 - 69
2994	3 - 78
	3 -102
3550	1 - 9
	1 - 22
	1 - 91
	1 -185C
	9 - 54
3960	2 - 57
4564	2 -127
5528	3 - 2
	3 -113
	4 - 21
	4 - 59
	6 - 6
5644	1 -158
6364	2 - 66J
	3 -118
	5 - 49D
6935	1 - 10
	1 - 21
	1 - 90
	1 -185B
	9 - 88

PART NO.	LIST AND INDEX NO.
9092	1 - 2
	1 - 6
	1 - 38
	1 - 44
	1 - 48
	1 - 53
	1 - 57
	1 - 61
	1 - 66
	1 - 75
	1 - 79
	1 - 83
	1 - 96
	1 -100
	1 -110
	1 -121
	1 -125
	1 -129
	1 -136
	1 -137D
	1 -140
	1 -154
	1 -161
	1 -188
	1 -197
	1 -201
	1 -208
	1 -211
	1 -217
	1 -229
	1 -232
	1 -238
	1 -242
	2 - 13
	2 - 26
	2 - 35
	2 - 39
	2 - 43
	2 - 47
	2 - 54
	2 - 60
	2 - 76
	2 - 80
	2 - 88
	2 - 96
	2 -100
	2 -132
	2 -141
	2 -146
	2 -156
	2 -160
	2 -164
	3 - 79
	3 -103
	3 -137
9098	1 -191
10170	1 -142
	2 - 50
	3 - 36
	3 -117
	4 - 41D
	5 - 17
	9 - 22B
	9 - 32
	9 - 57
	9 - 75B
	9 - 94
	9A- 6
	9A- 29
	9A- 35
	9A- 38
	9A- 49
	9A- 61
	10 - 11
10340	6 - 11
11598	1 - 47
	1 - 52
	1 - 55
	1 - 59
	1 - 64

PART NO.	LIST AND INDEX NO.
11598-CONT	1 - 74
	1 - 78
	1 - 82
	1 - 95
	1 - 99
	1 -120
	1 -124
	1 -128
	1 -137F
	1 -139
	1 -160
	1 -190
	1 -196
	1 -200
	1 -210
	1 -216
	1 -231
	1 -237
	1 -241
	2 - 1
	2 - 14
	2 -145
	2 -163
	3A- 19
	5 - 70
	5 - 90
	9 - 24
	9 - 77
12553	2 -167
22478	1 - 3C
	1 - 3G
	3 - 22
	3 - 39
	3 - 58
	3 - 65
	3 -115
	4 - 15
	4 - 27
	4 - 32
	5 - 11
	5 - 13
	6 - 3
	6 - 7
	6 - 12
23105	4 - 48
23141	4 - 40
25627	4 - 26
	4 - 63
	4 - 64
	5 - 10
28692	2 -101
32042	1 - 73
	1 -109
	1 -119
	1 -194
	1 -235
	2 - 9
	2 - 84
	5 - 5
	9 - 63
	9A- 45
34512	1 - 3B
	1 -172
	2 - 20
	2 - 63
	2 - 85
	3 - 38
	3 -120
	4 - 24
	4 - 36
	4 - 39
	4 - 52
	9 - 7
	9 - 90
	10 - 23
	11 - 29
35229	4 - 46
	5 - 22
35739	3 - 71
	3 -106

PART NO.	LIST AND INDEX NO.
35739-CONT	4 - 9
	9 - 44
	9 - 50
	9A- 24
36109	1 - 11
	9 - 55
	9 - 87
36112	1 - 8
36844	9 - 53
37913	1 -107
	3A- 8
	5 - 62
38235	3A- 5
	5 - 64
	5 - 76
	8 - 19
	9 - 60
	9A- 52
	9A- 63
	9A- 66
38352	9 - 39
	9A- 16
38364	2 -175
38381	1 -135
38387	5 - 78
	5 - 84
38433	4 - 19C
38443	1 -149G
38686	1 - 20
	1 - 89A
	1 -185A
	2 - 73
45671	2 -118
45690	1 - 60
	1 - 65
	1 - 97
	1 -101
	1 -111
	1 -212
	1 -218
	2 - 10
	2 - 12
	3 - 80
	3 -104
	3 -138
	9 - 26
	9 - 65
	9 - 79
47987	2 -153
	5 - 57
52523	3 - 69
	3 - 92
52684	11 - 8
55198	3 - 24
55711	2 -131
	3A- 18
55726	4 - 57B
	4 - 57D
	5 - 12
	7 - 20
	9 - 16
	9 - 42
	9A- 9
	9A- 19
55901	2 - 64
	2 -103
	2 -106
	3 -123
55918	3 -127
	4 - 5
	5 - 7
56079	1 - 2A
	1 - 32
	1 - 40
	1 -140A
	1 -161A
	2 - 11
	2 - 62
	2 - 90
	2 -135

PART NO.	LIST AND INDEX NO.
56079-CONT	3 -130
	9 - 25
	9 - 64
	9 - 78
58207	1 - 14
	1 - 34
	2 - 6
	2 - 66B
	2 -102
	3 - 28
	3 -122
	4 - 23
	9 - 1
	10 - 21
	11 - 1
	11 - 5
	11 - 14
	11 - 18
	11 - 22
62031	11 - 34
76574	9 - 56
78999	9 - 36
81693	4 - 14
	9A- 71
	9A- 74
	11 - 33
101807	6 - 2
103079	9A- 64
104613	3 - 64
104615	9 - 37
	9A- 15
104701	7 - 25
104702	6 - 30
104712	5 - 83
104763	2 - 5
106419	5 - 89
107666	9 - 38
	9A- 14
113288	1 -214
120213	1 - 1
	1 - 37
	2 - 59
	2 - 87
	2 -155
	2 -159
120571	4 - 49
123780	4 - 1
130434	1 - 5
	1 - 43
	1 -137C
	1 -153
	1 -187
	1 -207
	1 -228
	2 - 25
	2 - 34
	2 - 38
	2 - 42
	2 - 46
	2 - 53
	2 - 75
	2 - 79
	2 - 95
	2 - 99
	2 -140
	3 -136
130987	2 -189
138755	2 -186
139050	5 - 43
151598	1 -149F
	1 -181
	12 - 1
154214	2 -126
156231	4 - 8K
179743	10 - 18
179946	9 - 35
183755	1 -175
185116	1 - 15
	1 - 35
186758	1 -177

PART NO.	LIST AND INDEX NO.
186758-CONT	3 -135
	4 - 31
186759	4 - 54
	4 - 56
	11 - 10
186924	3 - 17
	3 - 53
186929	5 - 32
186931	5 - 21
	7 - 3
186933	10 - 37
186950	2 -188
186952	4 - 60
194355	12 - 74
204499	10 - 26
204500	10 - 27
204616	5 - 69
205331	11 - 39
209567	2 -187
210883	1 -147
	1 -170
	9 - 47
	9A- 22
	10 - 13
210884	9A- 23
214438	2 - 30
	2 - 68
216323	3A- 17
220856	10 - 25
221790	9 - 3
222696	2 - 16
225532	2 - 74
234977	3 - 84
	3 - 98
236550	5 - 67
236849	1 - 3L
	1 - 23
	1 - 27
	1 - 31
	1 -149C
	1 -151
	2 - 7
	2 - 22
	2 - 32
	2 - 71
	2 -108
236916	12 - 54
242260	10 - 17
251227	5 - 4
251759	2 - 65
251762	8 - 11
251970	3 -133
253220	10 - 15
253425	2 -134
255939	2 - 58
	2 -107
257187	2 - 66K
	3 - 72
	3 -107
	5 - 49E
	8 - 20
	9 - 19
	9 - 41
	9A- 12
	9A- 26
	11 - 35
257189	1 - 3J
	1 -179
	4 - 70
	9 - 84
	9A- 55
257701	3 -116D
257958	5 - 44
257968	3 - 85
	3 - 97
257971	3 - 81
	3 - 99
257974	4 - 8G
257982	2 -128
	5 - 29

PART NO.	LIST AND INDEX NO.
257982-CONT	5 - 49
257984	3 - 18
	3 - 54
	5 - 61
257985	3 - 4
	3 - 14
	3 - 19
	3 - 44
	3 - 51
	3 - 55
257986	2 - 66H
	3 - 90
	3A- 3
	9 - 58
	9 - 61
	9A- 50
	9A- 53
	10 - 30
	10 - 33
264641	12 - 61
264998	4 - 17D
300606	11 - 31
302090	3 - 26
	3 -125
	11 - 41
302131	3 - 27
	3 -124
	11 - 40
307286	3 - 31
313385	3 -129A
316807	9A- 4
317131	1 -146
317227	2 - 52
317310	1 -169
317485	9 - 51
322065	3 - 89
	4 - 11
	9 - 20
	9A- 11
322266	1 -145
322550	1 -144
	1 -167
	5 - 49C
	5 - 73
	9A- 31
	10 - 14
322551	3 - 30
	3A- 2
	8 - 8
	9 - 28
322552	7 - 19
	9 - 81
322555	2 - 66G
332560	2 -117
	3 - 42
332620	1 - 25
	1 -148A
	1 -149A
	5 - 47
336628	4 - 19B
337193	1 -143
	9 - 43
	9A- 18
338238	3A- 7
350830	2 -113
	2 -114
357995	1 -149E
	12 - 76
363001	11 - 4
	11 - 13
366291	4 - 7
367115	9 - 45
	9A- 20
	10 - 16
369207	2 -180
	2 -183
369649	11 - 36
430799	12 - 20
438538	3 - 3
	3 - 43

PART NO.	LIST AND INDEX NO.
438542	5 - 56
438544	2 -150
438548	9A- 59
438549	3 - 25
	3 -126
	11 - 38
438550	3 - 61
438551	5 - 50
438552	1 -106
	3 - 13
	5 - 19
438567	9 - 40
	9A- 25
438586	4 - 62
438588	4 - 44
438589	5 - 35
438602	3 -129
474405	1 - 86
	1 -132
	1 -204
	1 -245
483652	12 - 2
483657	12 - 3
483658	12 - 3A
483659	12 - 4
483661	12 - 57
483676	12 - 7
483677	12 - 7A
483678	12 - 8
483679	12 - 9
483682	12 - 10
483683	12 - 11
483685	12 - 11A
483686	12 - 12
483687	12 - 13
483689	12 - 14
483770	12 - 63
502590	9 - 48
	9A- 21
507142	11 - 24
510316	11 - 19
	11 - 23
518611	2 - 62A
523022	2 - 93
524519	10 - 8
	11 - 44
526378	9 - 29
	9 - 82
527916	9 - 52
	9A- 32
557669	1 - 72
599557	2 - 66C
	2 - 66D
615354	11 - 46
621446	9 - 80
625955	9 - 27
631769	9 - 71
	9A- 47
637733	1 - 18
639292	11 - 42
642571	3 - 32
642597	3 - 33
642598	3 - 34
676748	2 -104
725506	12 - 15
736860	2 - 3
738826	3A- 16
738827	10 - 19
740459	12 - 16
740554	1 -168
749513	3 - 70
	3 -110
749519	3 - 68
	3 - 94
753317	3 -116B
759024	3 -129B
801652	9 - 97
	9A- 75
801731	11 - 43
804109	10 - 3

PART NO.	LIST AND INDEX NO.
807612	5 - 51
	5 - 60
811417	10 - 2A
	10 - 29
	10 - 32
811802	12 - 17
811804	9A- 40
813179	10 - 6
813194	12 - 37
813197	12 - 38
813549	12 - 39
813550	12 - 40
813681	12 - 41
813801	12 - 42
813802	12 - 43
817905	10 - 36
818002	10 - 41
819268	10 - 31
819269	10 - 34
819284	10 - 35
819408	10 - 41
825880	10 - 28
828310	8 - 6
	8 - 31
832610	3 - 74
	3 -105
832611	3 - 73
	3 -109
832612	3 - 76
832613	3 -108
832626	3 - 75
	3 -111
833616	2 - 28
	2 - 67
833617	2 - 31
	2 - 70
833618	2 - 29
	2 - 69
833697	1 - 16
	1 - 36
839379	4 - 8B
	4 - 16
842555	2 -178
842556	2 -178
845762	2 -182
848876	1 -108
	1 -215
850065	1 -179A
850248	1 - 3K
853634	2 - 33
	2 - 72
855263	2 -181
855282	2 -176
855283	2 -177
855286	2 -178
856516	5 - 25
856575	2 - 91
	2 -112
	3 -121
	3 -131
902075	2 -181
906744	2 -176
906758	2 -177
911932	1 - 88A
	2 -181
960740	2 -181
960742	2 -181
960746	2 -181
960748	2 -181
960752	2 -181
960766	2 -178
960856	2 -181
1072433	3 - 21
	3 - 57
1073412	11 - 32
1073418	8 - 25A
1074048	9 - 8
1076717	4 - 66
1077739	6 - 9
1090394	5 - 18

PART NO.	LIST AND INDEX NO.
1090394-CONT	5 - 74
1090873	1 - 3H
	1 -178
	3 - 64A
	3 -114
	4 - 45
	5 - 23
	6 - 13
	7 - 4
	9 - 9
	9 - 85
	9A- 54
1091035	5 - 24
1092125	2 -148
1105806	12 - 68
1117437	7 - 5
1127037	12 - 18
1132887	6 - 25
	7 - 17
	1 -157
1145820	8 - 22
1154943	4 - 65
1164127	12 - 21
1166115	12 - 55
1166116	5 - 66
1166117	12 - 23
1166498	12 - 6
1471019	1 -164
1471028	1 -166
	12 - 59
1589401	2 -152
1794532	4 - 8
1794534	4 - 18
1794535	3 -134
1794545	8 - 9
1794572	4 - 42
	5 - REF
1794573	3 -141
	4 - REF
1794618	4 - 20
1794622	3 -142
1794623	3 -142
1794624	3 -142
1794625	3 -142
1794626	3 -142
1794627	6 - 5
1794630	6 - 15
	7 - 6
1794631	8 - 32
1794632	8 - 26
1794633	8 - 24
1794634	8 - 23
1794636	8 - 27
1794637	8 - 33
1794638	8 - 21
1794641	8 - 15
1794645	8 - 36
1794649	5 - 54
1794656	6 - 10
1794670	3 -142
1794671	3 -142
1794672	3 -142
1794688	3 -142
1794691	5 - 20
1794693	3 -142
1794695	3 -142
1794697	3 -142
1794703	3 -142
1794724	12 - 46
1794753	5 - 39
1794754	5 - 27
1794758	5 - 37
1794761	7 - 7
1794770	5 - 42
1794779	7 - 7
1794787	4 - 41A
1794791	4 - 41C
1794792	4 - 41B
1794800	6 - 14
1794801	6 - 21

PART NO.	LIST AND INDEX NO.
1794804	2 -171
1794806	4 - 41
1794808	5 - 31
1794809	5 - 30
1794814	4 - 25
1794815	7 - 8
1794820	3 -142
1794825	6 - 8
1794826	4 - 43
	7 - REF
1794836	3 -142
1794837	5 - 36
1794838	5 - 45
1794844	7 - 2
1794845	7 - 1
1794876	3 -142
1794877	3 -142
1794878	3 -142
1794879	3 -142
1794880	3 -142
1794881	3 -142
1794882	3 -142
1794883	3 -142
1794884	3 -142
1794886	3 -142
1794887	3 -142
1794888	3 -142
1794889	3 -142
1794890	3 -142
1794900	4 - 72
1794908	3 -142
1794910	3 -142
1794912	3 -142
1794914	3 -142
1794915	3 -142
1794916	3 -142
1794917	3 -142
1794918	3 -142
1794927	3 -142
1794929	3 -142
1794930	3 -142
1794933	3 -142
1794935	3 -142
1794937	3 -142
1794939	3 -142
1794952	3 -142
1794955	3 -142
1794962	3 -142
1794963	3 -142
1794969	8 - 35
1794970	4 - 61
	8 - REF
1794971	3 -142
1794972	3 -142
1794975	3 -142
1794976	3 -142
1794979	3 -142
1794985	3 -142
1794986	3 -142
1794987	3 -142
1794988	3 -142
1795022	3 -142
1795023	3 -142
1795030	3 -142
1795060	3 -142
1795106	3 -142
1795124	3 -142
1795131	3 -142
1795139	3 -142
1795154	3 -142
1795157	3 -142
1795160	3 -142
1795163	3 -142
1795172	3 -142
1795208	3 -142
	3 -142
1795210	3 -142
1795244	3 -142
1796730	10 - 24

PART NO.	LIST AND INDEX NO.
1798805	6 - 4
1800481	4 - 51
1800487	5 - 81
1800527	5 - 33
1800685	4 - 71
1800702	4 - 47
1800703	6 - 20
	7 - 12
1800704	6 - 22
	7 - 15
1800707	6 - 16
1800717	6 - 19
1800718	6 - 17
	7 - 9
1800722	6 - 27
1800735	12 - 45
1800741	6 - 18
	7 - 10
1800796	6 - 26
	7 - 18
1801905	5 - 3
1801906	5 - 28
1801989	5 - 72
1801991	5 - 71
1801999	5 - 58
1802014	4 - 8D
1803793	5 - 88
1803802	3 -142
1807647	5 - 92
1808563	1 - 4
	3 - REF
1808564	1 - 4
	3 - REF
1810963	5 - 63
1810964	5 - 59
1810966	5 - 53
1810967	5 - 55
1810969	5 - 82
1810970	5 - 65A
1811021	5 - 75
1811047	11 - 2
1811048	11 - 6
1812271	4 - 17C
1812272	4 - 17B
1812291	4 - 8H
1812301	4 - 19A
1812306	4 - 8L
1812334	5 - 48
1812457	5 - 41
1812463	5 - 34
1812464	5 - 26
1812491	12 - 56
1812493	5 - 65
1812536	8 - 2
1812543	8 - 13
1812547	8 - 10
1812598	11 - 9
1812621	8 - 12
1812638	2 -170
1812643	4 - 8F
1812645	4 - 8E
1812646	4 - 8C
1814601	4 - 12
1814630	4 - 28
1814634	4 - 10
1814637	4 - 6
1814640	8 - 16
1814641	8 - 25
1814642	8 - 34
1814644	8 - 4
	8 - 29
1814647	8 - 5
1814648	8 - 30
1815055	1 - 41
	2 - REF
1815065	12 - REF
1815066	12 - REF
1815067	3 - 87
1815068	3 - 91
1815069	3 -112

PART NO.	LIST AND INDEX NO.
1815070	3 - 66
1815071	3 - 88
1815078	3 - 86
	3 - 95
1815095	3 - 96
1815100	1 - REF
1815105	1 - 3E
	3 - 37
1815108	2 -158
1815109	2 -154
1815113	1 - 68
	1 -220
1815117	1 - 87
1815119	1 -133
1815121	1 - 13
	1 - 33
1815149	12 - REF
1815150	12 - REF
1815151	12 - REF
1815152	11 - 45
	12 - REF
1815265	8 - 17
1815302	2 -173
1815352	6 - 24
	7 - 16
1815357	6 - 29
1815358	6 - 28
1815359	6 - 23
	7 - 14
1815361	4 - 8A
1815380	4 - 8J
1815409	5 - 38
1815410	5 - 40
1815411	2 -168
1815415	8 - 3
1815416	4 - 38
1815417	4 - 35
1815418	5 - 49B
1815419	4 - 34
	4 - 37
1815420	5 - 49A
1815421	5 - 15
1815433	8 - 18
1815434	8 - 14
1815436	8 - 1
1815857	7 - 11
1815859	7 - 24
1815864	7 - 13
1815865	7 - 23
1815870	4 - 58
1815886	4 - 57E
1815887	4 - 57A
1815888	4 - 53
1815889	4 - 55
1815890	4 - 57C
1815892	4 - 57
1815929	7 - 21
1815932	7 - 22
1816025	4 - 19
1816026	4 - 17
1816027	4 - 17A
1816028	4 - 17A
1816039	5 - 6
1819730	11 - 37
1819731	2 - 83
	11 - REF
1819733	2 - 86
1819739	1 -183
	12 - REF
1819740	2 - 66
	10 - REF
1819755	2 -144
1819756	2 -162
1819757	11 - 30
1819762	2 - 37
1819763	1 - 81
	1 -127
	1 -199
	1 -240
1819764	1 - 26

PART NO.	LIST AND INDEX NO.
1819764-CONT	2 -174
1819766	10 - 40
1819767	2 - 4
1819770	2 - 49
1819771	2 - 45
1819773	1 - 54
1821330	4 - 67
	4 - 68
1821336	2 -169
1821358	5 - 14
1821393	4 - 50
1821401	5 - 2
1821407	5 - 77
1821408	5 - 80
1821421	5 - 52
1821426	3 -134
	4 - 30
1821429	4 - 29
1847521	12 - 5
1847526	12 - 24
1847527	9 - 22
1847529	12 - 24A
1847530	12 - 25
1847532	1 -165
1847534	12 - 26
1847536	1 -163
1862655	1 -184
1993937	1 -149H
	12 - 77
1993977	1 -149B
2101840	12 - 70
2102204	9 - 4
2102364	3 - 29
	10 - 4
	10 - 5
2122128	9 - 5
	9A- 67
2125974	9A- 46
2132050	2 - 51
2162590	12 - 27
2162907	10 - 7
2172166	2 - 66F
2180701	1 -137B
2194720	3A- 6
2242321	9A- 33
2281275	9 - 13
2410111	11 - 7
2513254	12 - 53
2526535	1 - 63
	1 - 70
	1 - 92
	1 - 93
	1 - 94
	1 -103
	1 -222
	1 -223
2542049	9 - 33
2542403	9 - 11
	9A- 1
2574126	9 - 15
	9A- 8
2582954	1 -158A
	2 -184
2594759	12 - 28
2637682	12 - 19
2637689	12 - 71
2638059	5 - 91
2648906	10 - 1
2731852	12 - 29
2744813	12 - 32
2744814	12 - 58
2766709	10 - 41
4037302	12 - 60
4119489	9 - 76
4119491	9 - 23
4119618	1 -159
4124485	12 - 35
4134350	2 -181
4134959	1 - 28A
4134960	1 - 24A

PART NO.	LIST AND INDEX NO.
4134969	12 - REF
4134970	12 - REF
4134971	12 - REF
4134987	2 - 17
4134990	2 - 18
4134991	2 - 19
4134992	2 - 21
4134995	2 - 23
4134996	2 - 8
4135002	1 - REF
4135005	11 - 15
4135025	3A- 9
4135026	3A- 10
4135028	2 - 41
	2 -143
4135067	2 -149
4135069	10 - 22
4135072	3 - 8
	3 - 47
4135073	3 - 6
	3 - 46
4135081	2 - 66A
4135082	1 - 50
4135083	2 - 78
4135085	3 - 35
4135089	3 - 16
	3 - 56
4135092	3 - 1
4135096	3 - 5
	3 - 45
4135099	11 - 17
4135102	12 - REF
4135127	1 - 51
4135130	1 -183
	12 - REF
4135131	9 - 98
4135132	9 - 12
4135133	9 - 6
4135134	9 - 59
4135135	9 - 2
4135136	12 - 30
4135138	9 - 34
	9A- 36
	9A- 68
4135142	9 - 95
	9A- 37
4135143	9 - 23
4135144	9 - 76
4135151	9 - 86
	9A- 56
4135152	9 - 93
	9A- 73
4135153	9 - 89
	9A- 72
4136961	5 - 9
4136975	5 - 86
4138326	2 -115
4138327	1 -150
4138334	10 - 9
	12 - REF
4138336	12 - REF
4138338	1 -182
	12 - REF
4138339	1 - 89
4138340	1 -117
4138341	1 -104
4138342	1 -114
4138343	1 -115
4138344	1 -113
4138345	1 -102
4138346	1 - 42
4138347	1 - 71
4138348	1 -226
4138349	1 - 62
	1 - 67
	1 -219
4138350	1 -213
4138351	1 -225
4138352	1 -224
4138353	1 -206

PART NO.	LIST AND INDEX NO.
4138354	3 - 82
	3 -100
4138355	1 -205
	1 -246
4138363	3 - 77
	3 -101
4138364	2 - 82
4138365	2 - 24
4138367	1 - 19
4138370	2 - 56
4138371	1 - 77
	1 -123
	1 -193
	1 -234
4138372	1 -195
	1 -236
4138389	2 -110
4138390	1 - 29
4138391	1 - 69
	1 -105
	1 -221
4138394	1 - 98
4138396	2 - 92
4138397	2 -109
4138398	1 - 30
4138414	1 -185
	9 - REF
4138420	1 -185
	9 - REF
4138421	9 - 10
4253332	2 -129
4253783	2 -119
4253789	2 -130
4388552	3 - 50
4703211	11 - 11
4703212	3A- 1
4703214	1 -116
4703232	1 -176
4703236	4 - 2
4703237	4 - 4
4703239	1 -149D
	12 - 75
4703240	2 - 66E
4703241	2 - 66E
4703256	1 -170A
4703260	3 - 83
	3 - 99A
4703261	3 - 11
4703262	3 -115A
4703263	3 -115A
4703264	3 -115A
4703265	3 -115A
4703266	3A- 12
4703267	3A- 12
4703268	3A- 12
4703269	3A- 12
4703270	3A- 1
4703271	3A- 1
4703273	3A- 1
	3A- 1
4703276	6 - 1
4703277	9A- 30
5054290	2 -181
5054292	2 -181
5054294	2 -181
5054296	2 -181
5054478	2 -181
5054480	2 -181
5054482	2 -181
5054484	2 -181
5054488	2 -181
5054490	2 -181
5054492	2 -181
5054494	2 -181
5054496	2 -181
5054498	2 -181
5213276	4 - 13
	4 - 33
	4 - 73
	5 - 68

PART NO.	LIST AND INDEX NO.
5214000	9 - 14
	9A- 7
5214073	9A- 44
5214366	9 - 69
5214505	9 - 68
	9A- 43
5214572	12 - 31
5214573	5 - 87
5236656	9 - 22A
	9 - 75A
5240513	9 - 97
5252526	9 - 66
	9A- 41
5252740	9 - 67
	9A- 42
	11 - 16
5252809	11 - 3
5252810	11 - 12
5252839	9 - 83
5252841	1 -156
5252850	9 - 30
5257443	3 - 40
5270314	9 - 21
	9A- 13
5276701	9 - 31
5312656	3 - 62
5318966	9 - 72
5318968	9 - 73
	9 - 74
5323562	9 - 70
5325562	9A- 47
5353851	9 - 17
	12 - 33A
5353852	9 - 18
	12 - 34A
5353853	12 - 33
5353854	12 - 34
5353868	12 - 62
5353880	12 - 64
5353896	12 - 65
5353922	12 - 35
5362301	12 - 66
5362306	12 - 67
5404480	12 - 69
5412817	12 - 22
5447741	12 - 47
5466353	12 - 48
5466397	12 - 49
5486851	12 - 50
5576604	5 - 16
5576606	3 - 20
	3 - 59
5576607	3 - 49
5576609	3 -128
	5 - 8
5576611	3 - 12
	3 - 41
5576616	2 - 15
5576617	3 - 67
	3 - 93
5576620	12 - REF
5576626	2 -120
5576627	2 -121
5576629	2 -123
5576630	2 -122
	2 -124
5576631	2 -125
5576633	2 -139
5576635	2 -116
5576636	5 - 46
5576637	2 - 94
5576638	1 - 58
5576639	3 - 23
	4 - 3
5576640	2 -111
5576641	1 -149
	12 - REF
5576642	1 -152
5576643	1 - 13
5576644	3 -140

PART NO.	LIST AND INDEX NO.
5576646	3 -139
5576663	1 -180
5576664	3 -119
5576666	1 - 17
5576667	3 - 63
5576670	1 -118
5576671	1 -186
5576672	1 -227
5576673	3 -116A
5576677	1 -171
5576678	1 -183
	12 - REF
5576679	1 -171
5576687	12 - REF
5576689	9 - 91
	9A- 70
	12 - REF
5576690	9 - 92
	9A- 69
	12 - REF
5576691	10 - 10
	12 - REF
5576696	1 -134
5593412	12 - REF
5593415	10 - 39
5593416	10 - 38
5593418	2 - 98
5593422	11 - 47
5593430	3 -116
5593433	2 -151
5593434	3A- 12
5593435	3A- 13
5593438	3A- 14
5593440	3A- 4
5593441	3A- 15
5593443	3A- 20
5593446	1 -159
5593447	3 -115A
5593448	1 - 12
	3A- REF
5593453	10 - 20
	12 - REF
5593454	2 -172
5593455	2 -166
5593456	5 - 19A
5593457	3 -132
5593458	3 -116E
5593459	3A- 11
5593464	2 -109
5593465	1 - 3F
5593466	1 - 3A
5593470	1 -185
	9A- REF
5593474	9A- 76
5593475	9A- 3
5593476	9A- 5
5593477	9A- 48
5593478	9A- 62
5593479	9A- 34
5593482	9A- 10
	12 - REF
5593483	9A- 17
	12 - REF
5593484	9A- 65
5593485	9A- 28
5593486	9A- 60
5593487	12 - 44
5593488	9A- 57
	12 - REF
5593489	9A- 58
	12 - REF
5593490	9A- 51
5593492	9A- 2
5615309	11 - 20
	11 - 27
5615311	11 - 25
	11 - 26
5615592	11 - 28
5615879	11 - 21
5616034	3 - 60

PART NO.	LIST AND INDEX NO.
5733161	2 - 64A
5762057	9 - 96
5784857	8 - 28
5800634	12 - 36
5820539	8 - 7
5824095	10 - 12
5864584	9 - 62
6808518	1 -138
6808520	4 - 43
	6 - REF
6808521	1 -112
6808527	3 - 15
	3 - 52
6808528	8 - 25B
6808537	3 -115A
6808541	10 - 2
6808542	2 -179
6808543	2 -179
6808547	1 -171
6808548	2 -179
6808566	1 - 30A
6808567	1 - 24
6808568	1 - 28
6808569	1 - 46
6808579	1 -148
6808585	1 -138
6808586	3A- 21
6808587	3A- 21
6808588	3A- 21
6808593	1 -137A
6808596	2 -185
8029971	9 - 49
	9A- 27
8330332	1 - 88
8525989	9 - 75
	9A- 39

PART NO.	LIST AND INDEX NO.

5211 PC

5211 Printer
Order No. S124-0139-1

READER'S COMMENT FORM

This form may be used to communicate your views about this publication. They will be sent to the author's department for whatever review and action, if any, is deemed appropriate. Comments may be written in your own language; use of English is not required.

IBM shall have the nonexclusive right, in its discretion, to use and distribute all submitted information, in any form, for any and all purposes, without obligation of any kind to the submitter. Your interest is appreciated.

Note: *Copies of IBM publications are not stocked at the location to which this form is addressed. Please direct any requests for copies of publications, or for assistance in using your IBM system, to your IBM representative or to the IBM branch office serving your locality.*

- Did you find the part you needed in the catalog?
- If you *did not* find the part in the catalog, how did you obtain the correct part number?
- What parts were you unable to find? (Include numbers if you were able to determine them by an alternate means.)
- If you *did* find the part you needed in the catalog, but had unusual difficulty locating it, please send us the part number and page number. Include a description of your difficulty if you wish.

Your comments:

Note: *Staples can cause problems with automated mail sorting equipment. Please use pressure sensitive or other gummed tape to seal this form. If you would like a reply, please supply your name and address on the reverse side of this form.*

Thank you for your cooperation. No postage stamp necessary if mailed in the U.S.A. (Elsewhere, an IBM office or representative will be happy to forward your comments.)

5211 Printer
Order No. S124-0139-1

READER'S COMMENT FORM

This form may be used to communicate your views about this publication. They will be sent to the author's department for whatever review and action, if any, is deemed appropriate. Comments may be written in your own language; use of English is not required.

IBM shall have the nonexclusive right, in its discretion, to use and distribute all submitted information, in any form, for any and all purposes, without obligation of any kind to the submitter. Your interest is appreciated.

Note: *Copies of IBM publications are not stocked at the location to which this form is addressed. Please direct any requests for copies of publications, or for assistance in using your IBM system, to your IBM representative or to the IBM branch office serving your locality.*

- Did you find the part you needed in the catalog?
- If you *did not* find the part in the catalog, how did you obtain the correct part number?
- What parts were you unable to find? (Include numbers if you were able to determine them by an alternate means.)
- If you *did* find the part you needed in the catalog, but had unusual difficulty locating it, please send us the part number and page number. Include a description of your difficulty if you wish.

Your comments:

Note: *Staples can cause problems with automated mail sorting equipment. Please use pressure sensitive or other gummed tape to seal this form. If you would like a reply, please supply your name and address on the reverse side of this form.*

Thank you for your cooperation. No postage stamp necessary if mailed in the U.S.A. (Elsewhere, an IBM office or representative will be happy to forward your comments.)

Reader's Comment Form

Fold and Tape | Please Do Not Staple | Fold and Tape

First Class
Permit 10
Endicott
New York

Business Reply Mail
No postage stamp necessary if mailed in the U.S.A.

Postage will be paid by:

International Business Machines Corporation
Department K10
P. O. Box 6
Endicott, New York 13760

Fold | Fold

If you would like a reply, *please print:*

Your Name _____

Company Name _____ *Department* _____

Street Address _____

City _____

State _____ *Zip Code* _____

IBM Branch Office serving you _____

IBM®

International Business Machines Corporation
Data Processing Division
1133 Westchester Avenue, White Plains, N. Y. 10604

IBM World Trade Americas/Far East Corporation
Town of Mount Pleasant, Route 9, North Tarrytown, N. Y., U. S. A. 10591

IBM World Trade Europe/Middle East/Africa Corporation
360 Hamilton Avenue, White Plains, N. Y., U. S. A. 10601

Reader's Comment Form

Fold and Tape | Please Do Not Staple | Fold and Tape

First Class
Permit 10
Endicott
New York

Business Reply Mail
No postage stamp necessary if mailed in the U.S.A.

Postage will be paid by:

International Business Machines Corporation
Department K10
P. O. Box 6
Endicott, New York 13760

Fold | Fold

If you would like a reply, *please print:*

Your Name _____

Company Name _____ *Department* _____

Street Address _____

City _____

State _____ *Zip Code* _____

IBM Branch Office serving you _____

IBM®

International Business Machines Corporation
Data Processing Division
1133 Westchester Avenue, White Plains, N. Y. 10604

IBM World Trade Americas/Far East Corporation
Town of Mount Pleasant, Route 9, North Tarrytown, N. Y., U. S. A. 10591

IBM World Trade Europe/Middle East/Africa Corporation
360 Hamilton Avenue, White Plains, N. Y., U. S. A. 10601

5211

Fold

5211

Cut

5211 Printer (PC) Printed in U.S.A. S124-0139-1

International Business Machines Corporation
Data Processing Division
1133 Westchester Avenue, White Plains, N. Y. 10604

IBM World Trade Americas/Far East Corporation
Town of Mount Pleasant, Route 9, North Tarrytown, N. Y., U. S. A. 10591

IBM World Trade Europe/Middle East/Africa Corporation
360 Hamilton Avenue, White Plains, N. Y., U. S. A. 10601

SECTION 21 GENERAL/TOOLS

SECTION CONTENTS

MAINTENANCE ANALYSIS PROCEDURES (MAPs) 21-010
- Using the MAPs 21-010
- MAP Example 21-010

LEGEND 21-030
- Logic Symbols 21-030
- Electrical Symbols 21-030
- Timing Charts 21-040
- Keying Symbols 21-040

GENERAL LOGIC INFORMATION 21-050
- 01A-A1 Board Layout 21-050
- Voltage Switching Levels 21-050
- 01A-A1 Board Voltage Distribution 21-060

TOOLS AND TEST EQUIPMENT 21-070
- General Logic Probe II (GLP) 21-070
  - Description 21-070
  - Accessories 21-070
  - Operation 21-070
- Gauges 21-080
- Miscellaneous 21-080

MAINTENANCE ANALYSIS PROCEDURES (MAPs)

The Maintenance Analysis Procedures (MAPs) are a step-by-step procedure to guide you through the service call by tracing a symptom to the cause of failure. The MAPs logically approach the possible cause of machine problems and may point you to the defective component, the necessary adjustment, or the field replaceable unit (FRU).

USING THE MAPs

When using the MAPs:

- Read Carefully. The MAPs can help you find the problem only if you follow instructions and answer questions correctly.
- Follow the Sequence. Proceed step-by-step through the MAPs at all times. At times, the MAP instructions may not seem applicable to the problem. However, they can be important in determining the failure.
- Follow Instructions. Instructions should be followed in the order given. Questions are based on instructions preceding the questions. Do not change the conditions established by the instructions before answering the questions.

Throughout the MAPs, references may be made to error indicators, second-level diagrams, service aids, or other informative material.

MAP EXAMPLE:

5211 START ← MAP Name and Number → MAP 0010-1

PAGE 1 OF 4

ENTRY POINTS ← Entry and exit points — show all entry and exit points to and from this MAP.

FROM	ENTER THIS MAP		
MAP NUMBER	ENTRY POINT	PAGE NUMBER	STEP NUMBER
0000	A	1	001

EXIT POINTS

EXIT THIS MAP		TO	
PAGE NUMBER	STEP NUMBER	MAP NUMBER	ENTRY POINT
2	005	0020	A
2	007	0022	A
3	016	0055	A
3	015	0070	A

This map is used to analyze the printer failure and direct you to the appropriate map.

001 ← Step Number
(Entry Point A)

Did the system maps direct you to the 5211 printer maps?

Y N

002
(Entry Point B) ← Instruction — establishes conditions for answering the next question.

Record failure indicators from the system and operator detected symptoms.
Inspect the printer for obvious causes of failure, such as a broken ribbon or print belt.
If the cause of the failure is obvious, find the repair procedure in the Map Index 0000.
Resolve printer power problems first.

Is a cable interlock problem or a printer power problem indicated? ← Y = yes N = no

Y N

4 3 2 ← Off-Page Referencing — identifies the page and trace where this MAP leg continues.
A B C

C
1

5211 START

PAGE 2 OF 4

003

Printer errors are indicated by a Check Light.

On-Page Referencing — indicates the trace and page where this MAP leg came from.

Question — answer either yes or no. Continue from your answer to the next question or instruction.

Is the Check Light on?

Y N

004

Press the Stop/Reset key and then the Ready key.
The Ready Light should come on and the print belt motor should start turning.

Printer set-up

1. Power is on
2. Forms are loaded
3. Print belt is installed
4. Throat is closed
5. Forms thickness control is set correctly
6. Cover closed
7. The system must be varied OFFLINE or in a DIAGNOSTIC mode

Is the Ready Light on?

Y N

005

Printer not ready.
Go to MAP 0020, Entry Point A.

External Exit Point — indicates the MAP and entry point to go to.

006

Is the print belt motor turning?

Y N

007

Print belt motor failure.
Go to MAP 0022, Entry Point A.

3 3
D F

LEGEND

LOGIC SYMBOLS

Positive logic is represented in this manual, and signal levels are disregarded. The negator or inverter (N block) inverts the logic (not the level). Passive elements such as line terminators, and pulse shapers are not usually shown because they do not contribute to the logic. Wiring diagram page numbers are indicated below most logic symbols.

Data flow is normally from left to right and from top to bottom; flow that may be logically unclear is shown by arrows.

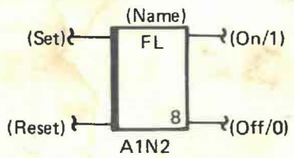

Flip Latch

Input side is denoted by heavy line. Circuit multiples shown by numerals in lower right corner.

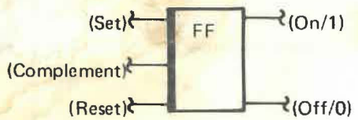

Flip-Flop

Input side is denoted by heavy line. Shift signal is shown by a P or N.

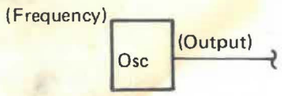

Oscillator

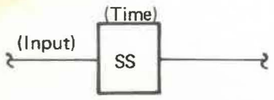

Single Shot

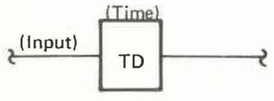

Time Delay

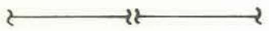

Line Break

Shows that the logic line, or bus, goes through another circuit. The line name can change, but not its value.

AND Block

The same basic symbol is used for other logic blocks. Each type is identified by the legend in the block, as follows:

A MD	AND gate, magnet driver output
EV	even
OD	odd
OE	exclusive OR
OR	OR

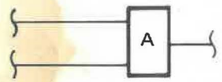

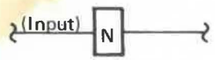

Negator (Inverter)

AMPLIFIER – The amplifier (AR) provides adequate driving energy and an appropriate impedance match to other blocks. The amplifier output is active only when the input is active. An amplifier having input or output of other than standard logic signal voltage has distinctive labeling at the block.

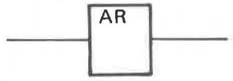

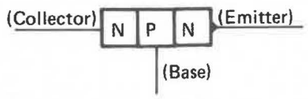

Transistor

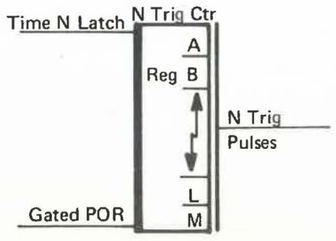

Counter

ELECTRIC SYMBOLS

Diode

Zener Diode

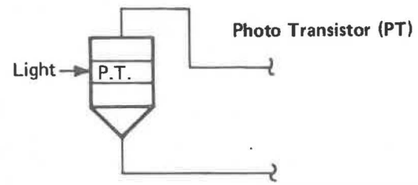

Photo Transistor (PT)

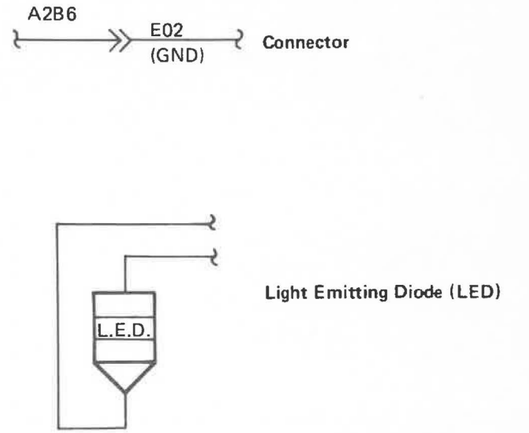

Connector

Light Emitting Diode (LED)

Belt or Carriage Emitter Circuit

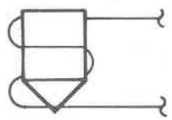

Emitter/Transducer

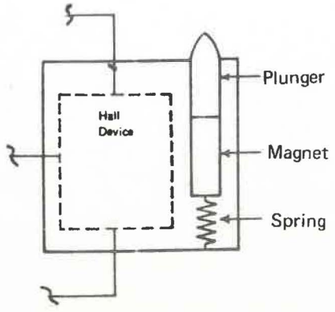

Hall Effect Sensor(Switch)

EC 784017 01Mar78	PN 8324218 2 of 2	21-030

TIMING CHARTS

Active State

Numerals at the beginning and end of the bar identify the signal(s) on the same chart that activates and deactivates this line. (Not) with the number indicates that lack of the signal conditions the line.

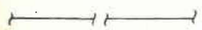

Line Break

Represents an interval in time.

KEY SYMBOLS

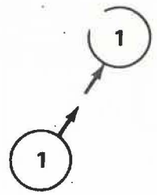

On-Page Connector

Indicates the connection between two parts of the same diagram. The arrow leaving the symbol points (line-of-sight) to a correspondingly numbered symbol.

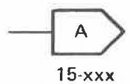

Off-Page Connector

Indicates the connection between diagrams that are located on separate pages. The location of the correspondingly lettered symbol is shown adjacent.

1 Denotes a reading sequence. Corresponds with a similar key in an associated diagram.

1 Denotes a reading sequence within a diagram. Corresponds with a similar key in the associated text.

A Denotes a nonsequential reading order. Sometimes corresponds with a similar key in an associated diagram.

GENERAL LOGIC INFORMATION

01A-A1 BOARD LAYOUT (Example: 5211 Model 2)

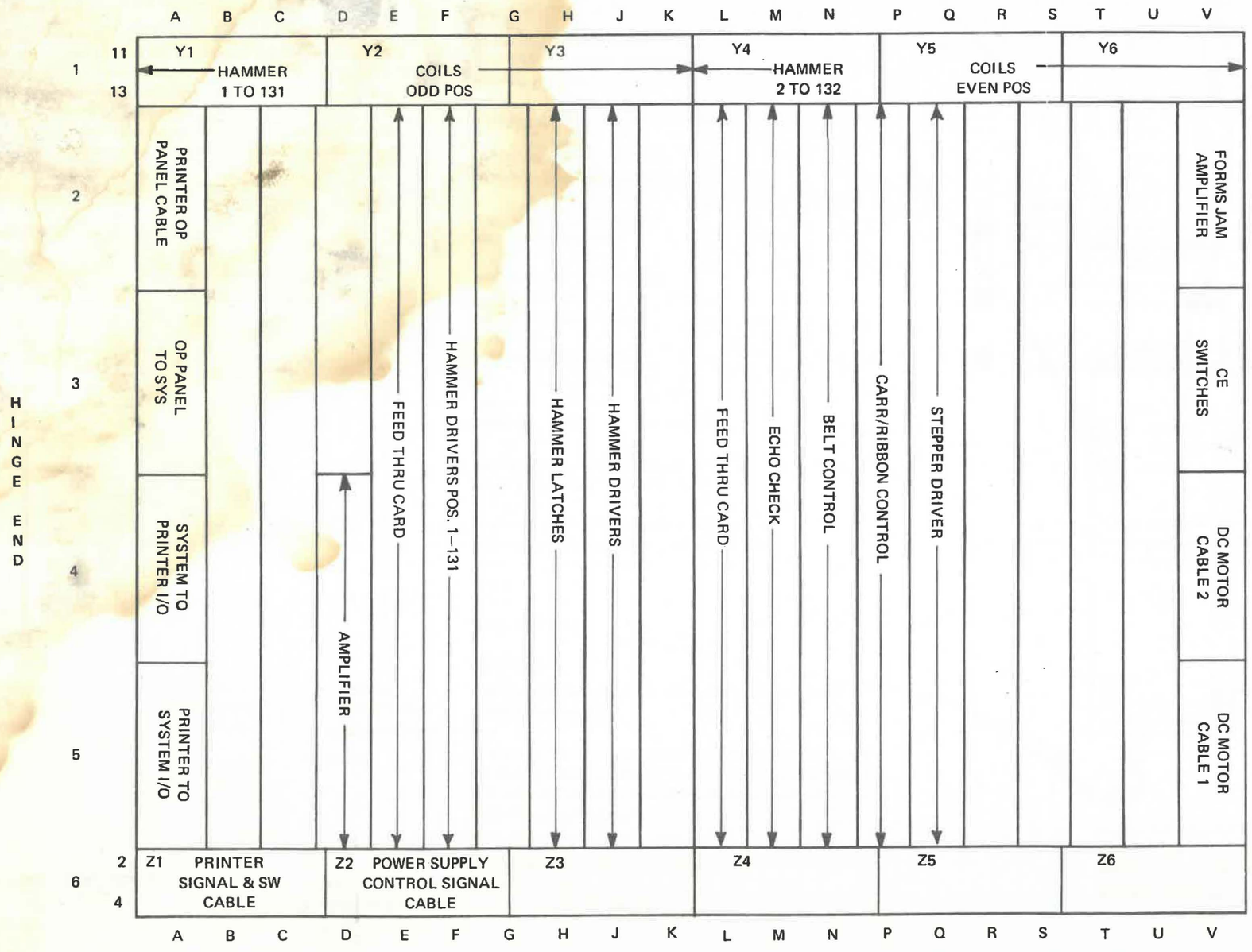

(CARD SIDE–VIEW)

VOLTAGE SWITCHING LEVELS

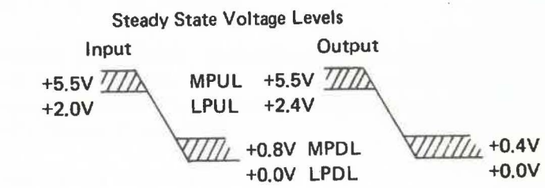

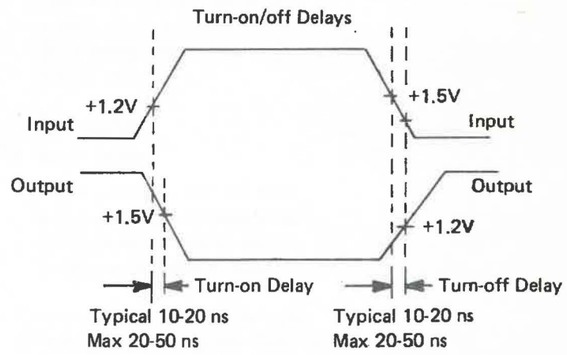

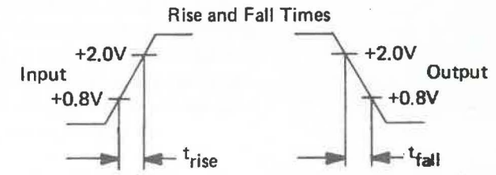

Polarity

Polarity is indicated by a wedge (◺) or no wedge.

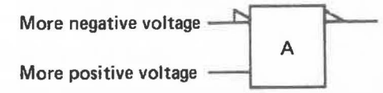

Active Level

Active level is the line level that conforms to the edge-of-block character for that line.

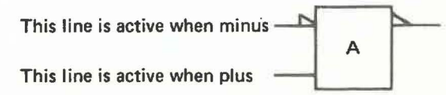

O1A - A1 BOARD VOLTAGE DISTRIBUTION

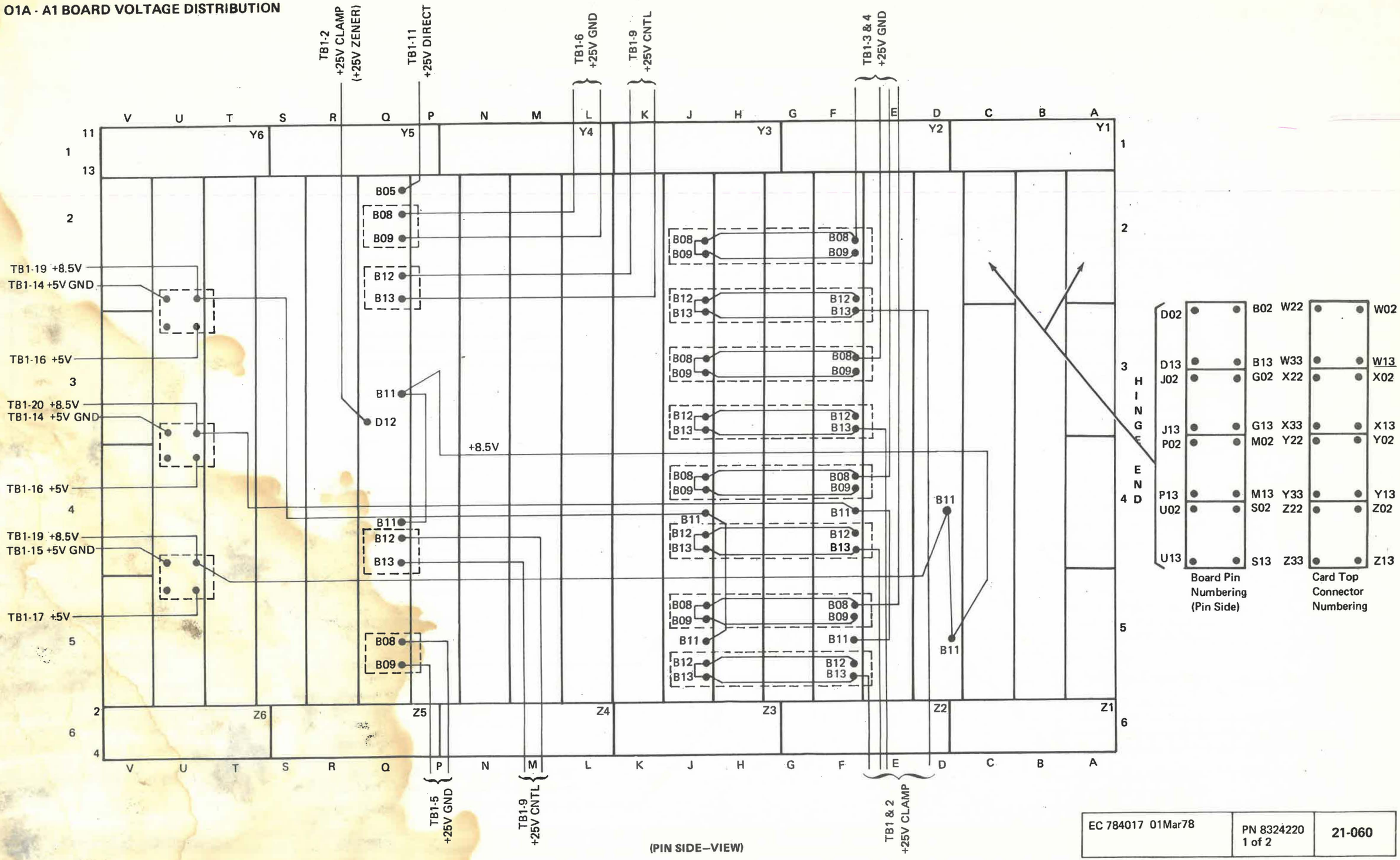

EC 784017 01Mar78	PN 8324220 1 of 2	21-060

TOOLS AND TEST EQUIPMENT

GENERAL LOGIC PROBE II (GLP)

Description

The IBM General Logic Probe II A is a small, rectangular, hand-held unit used by the Customer Engineer to detect logic signals for many technologies. It is designed for use on all new IBM machines that need a logic probe for maintenance. It replaces the old SLT type logic probe.

For a detailed description of the GLP Operation, specifications, and maintenance, see IBM GENERAL LOGIC PROBE II MANUAL, SY27-0127.

Accessories

2588263
SLT Jumper
12-Inch

5500900
4/40 to 6/32
Ground Lead

2728259
12V SLT Gate
Resistor 5.1K

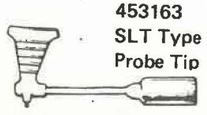

453163
SLT Type
Probe Tip

453167
SLT Ground
Tips (3)

5500901
Scope Probe
to 6/32 Adapter
w/Gnd

461159
Alligator
Clamps (2)

461091
6/32 Pin Tip

Operation

Gound Lead

Connect this lead to any signal ground (D08 pin) near the probe point. Do not use frame ground.

CAUTION

Improper indications result if this lead is not connected to signal ground.

Indicator Lights

UP indicates an up level (+).
DOWN indicates a down level (–).

A pulsing line is indicated by both lights being on.

Both lights are off if the line level is from +1.0 Vdc to +2.0 Vdc for MULTI logic setting.

Safe Operating Ranges:

	MULTI	+60.0V
Logic	MST 2/4	+14.0V
Selector	MST 1	+14.0V

Voltages greater than the above ranges will damage the probe.

Probe UP and DOWN lights will momentarily flash on during power up if the probe is connected to its machine power source. Please ignore.

Power Leads

CAUTION

Improper connection of the power lead might cause the probe to malfunction.

Connect the black (–) power lead to M2D08 (gnd). Connect the other (+) lead to M2D03. A voltage difference of 4V to 12V is needed to power the probe, with the black lead always the most negative.

Note: The power leads (+) D03 and (–) D08 can be connected to any card row on the 01A1 Board, EXCEPT the A and V rows.

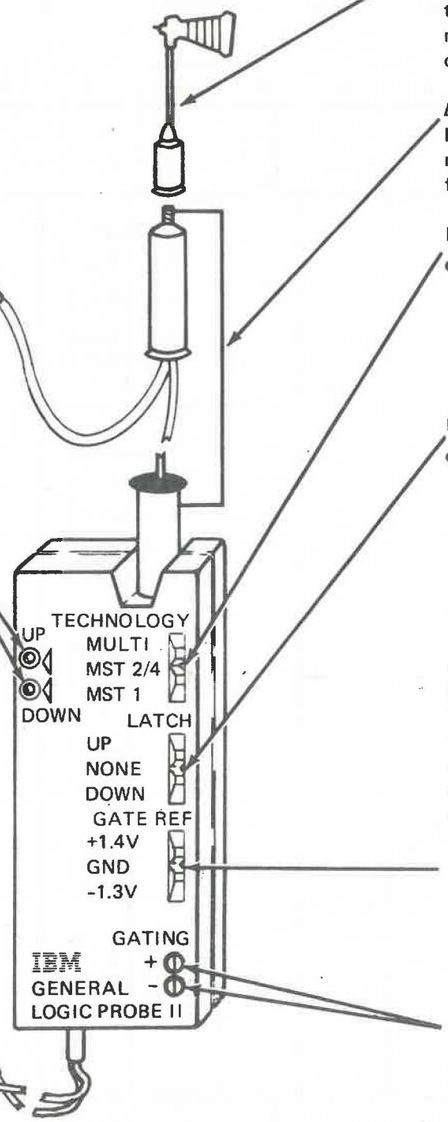

General Logic Probe II
(part 453212)

Test Terminal

The line being probed is connected to this terminal. (Various probes may be attached, other than the one shown, to aid in probing.)

Extender (part 453605). The extender is a 24 inch (60 cm) long probe that allows the general logic probe to be used more conveniently. The extender is ordered separately from the general logic probe.

Logic Selector (TECHNOLOGY)

- 5211: MULTI

  Selects the type of logic to be probed. Circuits probed in the 5211 Printer require the MULTI setting.

LATCH Switch

- 5211: NONE

  NONE position resets the lights and prevents any latching action. This position is used for most probing in the 5211 Printer

The up position allows satching the UP light on a positive pulse. The down position allows latching the DOWN light on a negative pulse. This feature can be used to monitor for an intermittent error condition or to verify that a pulse occurred when the operator could not continuously see the probe.

GATE REF Volts Switch

- 5211: GND

  This switch affects only the gating terminals and is not required for probing the 5211 Printer.

GATING Terminals

These terminals are not required for probing the 5211 Printer.

GAUGES

- B/M 1815365 contains the following tools:

  Platen Gap Gauge (1) Part 1814638
  Platen-to-Casting Gauge (2) Part 1815362
  4-40 Screws (2)

Platen Gap Gauge (part 1814638)

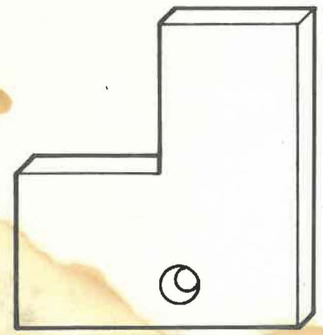

Platen-to-Casting Gauge (part 1815362)

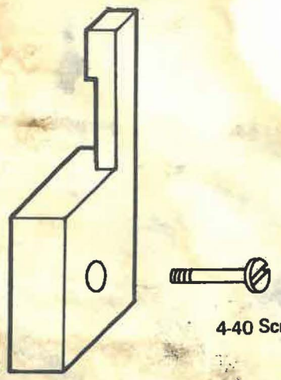

4-40 Screw

Print Registration Gauge (part 2360173).

Note: This is a Branch Office Tool and will not be found at the 5211 site.

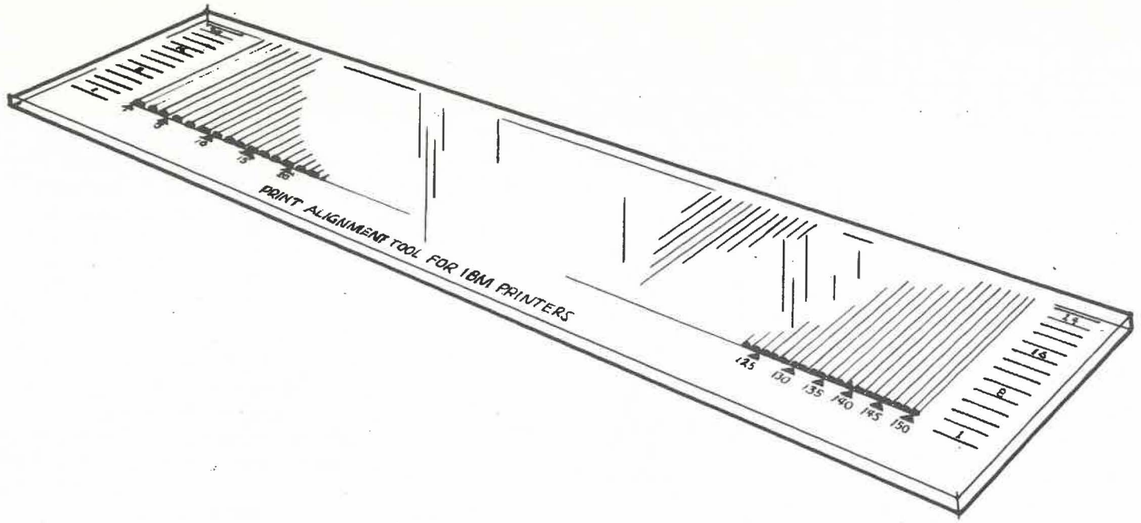

Bulb Extractor (part 461061)
For Indicator Lights on the Operator's Panel.

Note: These Tools and Gauges are not included in the 5211 Shipping Group. They must be ordered separetly.

MISCELLANEOUS

Snap-Ring Pliers (part 9900317)

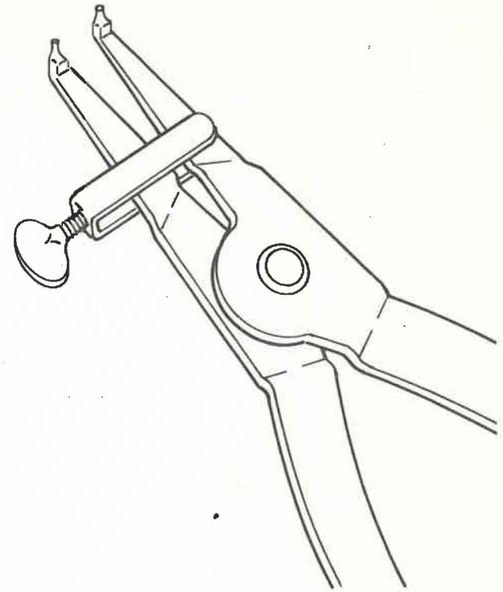

Wire Removal Tool (part 453705). This tool is used to remove wires from the printer's connector blocks.

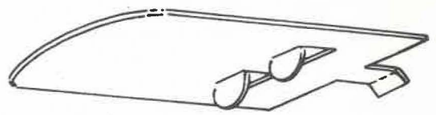

THIS PAGE INTENTIONALLY LEFT BLANK

SECTION: 22 INDEX/GLOSSARY

INDEX

A

abbreviations 22-040
acoustic skirts adjustment 15-050
attachment to system
  description
    forms control 15-020
    print line 15-020
    system 15-020
    universal character set buffer 15-020
    5211 printer 15-020
  functional units and data flow 15-030
  5211 printer/system signals 15-040

B

base and cover grounding 10-010
belt-drive motor
  circuit 4-060
  installation 4-060
  removal 4-060
  service check 4-060
belt-drive pulley
  installation 4-040
  removal 4-040
belt-idler pulley
  installation 4-070
  removal 4-070
  service check 4-070
belt idler pulley bracket
  adjustment 4-080
  installation 4-080
  removal 4-090
belt motor feedback LED
  adjustment 4-020
  circuit 4-030
  installation 4-020
  operational description 4-020
  removal 4-020
  service check 4-020
belt positioning rollers
  installation 4-090
  removal 4-090

C

carriage drive belt
  adjustment 8-040
  installation 8-040
  removal 8-040
  service check 8-040
carriage motor
  installation 8-070
  removal 8-070
  service check 8-070
  circuit 8-080
carriage motor control
  CE switch circuit 15-300
  circuit timing 15-290
  diagram 15-280
  further carriage advance 15-290
  initial carriage advance 15-290
  stop pulse development 15-300
carriage motor feedback-LED
  adjustment 8-050
  circuit-carriage motor 8-060
  installation 8-050
  removal 8-050
  service check 8-050
carriage theory
  carriage drive 15-270
  carriage drive motor 15-270
  carriage drive feedback 15-270
  carriage drive tractors 15-270
CE general logic probe II (GLP) 21-070
CE P/S (power supply) test plugs 2-240
CE switch panel
  circuit, CE switches 2-030
  description 2-010
  service check 2-010
  tests 2-020
circuit-cable interlock 3-040
circuits, hammer firing 15-170
circuit, operator's panel 3-020
cleaning aids 14-010
cleaning (*see* PM)
cooling fan
  installation 9-030
  removal 9-030
contents of MIM 1-010
cover adjustments
  acoustic skirts 10-050, 17-020
  arm, support 10-010
  front access door 10-030
  latch 10-020
  left and right end cover 10-040
  grounding, base and covers 10-010
  rear access door 10-030
  seal 10-020
  top cover lift mechanism 10-020
  top cover magnetic latch 10-020

D

data
  parity check 15-200
  strobe 15-170
diagnostic description
  function tests
    character 16-010
    matrix 16-010
    ripple 16-010
  introduction 16-010
  timing test
    belt motor 16-010
    carriage motor 16-010
    impression 16-010
diode D1 service check 9-040
documentation plan
  manual layout, how to find 1-010
  section descriptions 1-020
  starting a call 1-010

E

echo check 15-200
end-of-forms switch
  adjustment 7-020
  circuit, end-of-forms interlock 7-030
  installation 7-020
  removal 7-020
  service check 7-020
error checking
  data parity check 15-200
  hammer-off checking, not print time 15-200
  hammer-on echo time 15-200

F

feedback LED 15-070
forms control buffer 15-270
forms motion sensing
  circuit, forms motion 8-030
  installation 8-030
  removal 8-030
forms path
  service check 7-010
  theory
    end-of-forms switch 15-250
    forms entry guides 15-250
    forms load compartment 15-250
    forms tractor 15-250
    introduction 15-250
    paper clamp 15-250
    stacker compartment 15-250
    tension fingers 15-250
    tinsel 15-250
forms skipping 15-270
forms spacing 15-270
forms tension assembly
  adjustment 7-080
  installation 7-090
  removal 7-090
  service check 7-080
function and timing tests
  belt feedback LED timing 2-090
  carriage feedback 2-090
  carriage space/skip 2-090
  character print test 2-090
  impression control 2-090
  matrix print test 2-090
  ripple print test 2-090
function wiring and timing diagrams 19-000

G

general logic information
  voltage switching 21-050
  01A-A1 board layout 21-050
  01A-A1 board voltage 21-060
glossary 22-040

H

hammer
  addressing and firing 15-170
  adjustment, flight time 5-140
  circuits (model 1)
    hammer probe points 5-190
    representative circuit 5-180
  circuits (model 2)
    hammer probe points 5-190
    representative circuit 5-180
  coil
    installation 5-150
    removal 5-150
  driver circuit 15-170
  firing time 15-170
  installation 5-140
  removal 5-140
  springs and plungers
    installation 5-170
    removal 5-170
hammer unit
  hammer coils 15-150
  hammers 15-150
  model 1
    installation 5-130
    removal 5-130

hammer unit (continued)
model 2
installation 5-130
removal 5-130
how to use this manual 1-010

I
impression control potentiometer
adjustment 5-050
circuit 5-060
installation 5-050
removal 5-050
service check 5-050
IMPSS, description 16-010
installation instructions 17-010
introduction-5211 theory 15-010

L
legend
electric symbols 21-030
key symbols 21-040
logic symbols 21-030
timing charts 21-040
locations 13-000
lower ribbon shield
installation 6-040
removal 6-040

M
maintenance analysis procedures (MAPs)
example 21-010
using 21-010
model 1-type selection
scanning sequence 15-180
subscan, print belt 15-180
model 2-type selection
scanning sequence 15-090
subscan, print belt 15-190
motors
belt drive
circuit 4-060
installation 4-060
removal 4-060
service check 4-060
theory of operation 15-070
carriage
circuit 8-080
installation 8-070
removal 8-070
service check 8-070
theory of operation 15-290
motors (continued)
fan, logic gate
installation 9-030
removal 9-030
ribbon, left
circuit 6-070
installation 6-070
removal 6-070
service check 6-070
theory of operation 15-220
ribbon, right
circuit 6-080
installation 6-080
removal 6-080
service check 6-080
theory of operation 15-220

O
operator's panel
EDS assembly
installation 3-010
removal 3-010
LED board
installation 3-010
removal 3-010
theory 15-050

P
paper clamp assembly
adjustment 7-040
installation 7-040
removal 7-040
service check 7-040
paper clamp bar
installation 7-060
removal 7-060
paper clamp coil
circuit, paper clamp 7-070
installation 7-060
removal 7-060
parity check 15-200
parts catalog 20-000
plugs
power supply
P1 - T2 input 9-010, 13-040
P4 - logic gate fan 9-010, 13-040
P20 - T2 output (25 volts dc) 9-010, 13-040
P23 +25 volts dc 9-010, 13-040
P25 - +5 and +8.5 volts dc 9-010, 13-040
P26 - internal 24 volts ac 9-010, 13-040
P27 - power sense signals 9-010, 9-080, 13-040
P1 - carriage motor 8-080, 13-050
P2 - ribbon motor, right 6-080, 13-010
P3 - paper clamp 7-070, 13-010
plugs (continued)
P4 - belt motor 4-060, 13-010
P5 - PSS emitter 4-110, 13-020
P6 - ribbon motor, left 6-070, 13-010
P7 - logic gate fan 9-030, 13-030
P8 - operator's panel 3-020, 13-050
P9 - forms jam sensing 8-030, 13-010
P13 - impression control potentiometer 5-060, 13-020
PM 14-010
power distribution 9-060
power on reset-POR 9-070
power supply
installation 9-010
removal 9-010
signals 9-080
test points 2-050
theory
introduction 15-340
power on sequence 15-340
voltage selection 9-010
preventive maintenance (PM) 14-010
primary power section
cover installation 9-020
cover removal 9-020
voltage selection 9-020
print and space operation model-1
forms movement 15-310
printing 15-310
system setup 15-310
print and space operation model-2
forms movement 15-320
printing 15-320
system setup 15-320
print belt 4-010
print belt drive
acceleration and running speed 15-070
belt synchronization with systems 15-070
error checking 15-070
mechanism
idler pulley and print 15-070
motor and drive pulley 15-070
print belt motor 15-070
print belt positioning 15-070
motor control
belt sync 15-090
belt up to speed 15-090
CE switch control 15-110
gated open loop 15-090
logic 15-130
print belt motor 15-090
start print 15-080
4 megahertz 15-080
start print belt motor 15-070
print belt
error conditions 15-110
installation 4-010
motor control timing 15-120
removal 4-010
print quality identification 2-070
print subscan components
print belt timing marks 15-140
PSS pulses 15-140
synchronization to 15-140
transducer 15-140
print subscan (PSS) emitter assembly
adjustment 4-120
mechanical 4-120
print subscan (PSS) transducer
adjustment 4-100
circuit 4-110
installation 4-110
removal 4-110
service check 4-100
print unit casting
adjustment 5-010
installation 5-010
removal 5-010
service check 5-010
print unit casting theory
form thickness control 15-150
platen 15-150
print unit interlock switch
adjustment 5-030
circuit, impression 5-040
installation 5-030
removal 5-030
service check 5-030
printer components
addressing 15-150
error checking 15-150
firing the hammers 15-150
forms thickness and impression 15-150
hammers 15-150
print belt timing marks 15-140
print line 15-150
print line buffer 15-150
PSS pulses 15-140
subscans 15-150
synchronization to system 15-140
transducer 15-140
universal character set buffer 15-150
printing
data parity check 15-200
data strobe 15-170
hammer firing time 15-170
sequence, model 2 15-160

P/S test 2-040, 13-040
PSS and home pulse development and use
home pulse 15-140
PSS pulses 15-140
PSS emitter operation
print belt and belt guide 15-140
transducer and amplifier 15-140

R

ribbon
motor, left
circuit 6-070
installation 6-070
removal 6-070
service check 6-070
motor, right
circuit 6-080
installation 6-080
removal 6-080
service check 6-080
mounting plates
installation 6-060
removal 6-060
removal 6-010
reverse switches
adjustment 6-050
circuit 6-050
installation 6-050
removal 6-050
service check 6-050
theory
check circuits 15-230
ribbon drive 15-220
introduction 15-220
reversal 15-230
ribbon stop 15-230
tracking
adjustment 6-020
service check 6-020

S

safety
equipment 1-030
personal 1-030
scanning sequence
model 1 15-180
model 2 15-190
second level diagrams 19-000
signal cables and connectors 3-030
switches
CE panel
circuit 2-030
description 2-010
service check 2-010
end-of-forms
adjustment 7-020
circuit 7-030
installation 7-020
removal 7-020
service check 7-020
operator's panel
circuit 3-020
installation 3-010
removal 3-010
print unit interlock
adjustment 5-030
circuit 5-040
installation 5-030
removal 5-030
service check 5-030
ribbon reverse
adjustment 6-050
circuit 6-050
installation 6-050
removal 6-050
service check 6-050
system control
forms control buffer 15-270
forms skipping 15-270
forms spacing 15-270

T

theory of operation 15-000
theory of printing
home pulse 15-160
impression control single shot 15-160
print mechanism 15-160
print subscans 15-160
tinsel, static eliminator 10-010
tools and test equipment
gauges 21-080
general logic probe 21-070
type selection
model 1 15-180
model 2 15-190

Numerics

25-volt Contactor - K1 9-050
5211 error checks
any hammer on check 2-100
belt speed check 2-100
belt sync check 2-100
belt up-to-speed check 2-100
cable interlock check 2-100
carriage check 1 2-100
carriage check 2 2-100
data parity check 2-100
forms jam check 2-100
hammer echo check 2-100
printer busy too long check 2-100
printer busy too often check 2-100
printer power check 2-100
ribbon check 2-100

GLOSSARY OF TERMS AND ABBREVIATIONS

A

A: Ampere, AND.
ac: Alternating current.
accelerate: To increase in speed. For example, the print belt motor accelerates to operating speed.
amp: Amplifier.
AR: Amplifier/driver.

B

BLK: Black.
B/M: Bill of material.
buffer: A storage device that is used to hold data for processing between the system and the printer. For example, print line buffer.
BUTS: Belt up to speed.

C

C: Capacitor.
carr: Carriage.
Carriage time: The time when the carriage is moving.
CE: Customer engineer.
character set: One complete group of characters on the print belt.
CK, CHK: Check.
Closed loop: The mode of control of a stepper motor by using pulses that are generated as a result of the motor's motion (feedback pulses). The motor is first started by an external pulse.
cm: Centimeter.
CNTL: Control.
compartment: A designated space such as "stacker compartment".
Conn: Connector.
Ctr: Counter.

D

D: Diode.
dc: Direct current.
detent: A device used to position and hold one mechanical part in relation to another so that the device can be overridden by using additional force. On the 5211, an electrical detent is used to hold the carriage mechanism in place when it is not moving the forms.
diagram: Figure.
drag: The force put on the ribbon or forms to keep tension on them. See also ribbon drag.

E

E: Emitter.
EC: Engineering change.
echo: A Hammer Echo Return Signal is sent back to the System in response to each hammer-fire signal.
EDS: Elastic-diaphragm switch.
elastic-diaphragm switch: The switch contact is operated by a flexible key top instead of a push button. The keys used on the 5211 operator's panel are this type.
EOF: End of forms.

F

F: Fuse.
FCB: Forms control buffer.
FF: Flip flop.
Fire Tier Pulse (Fire-Time Pulse): The pulse is activated by the system to fire the group of hammer(s) that was addressed on the previous subscan. There are five separate fire-time pulses or tiers, and each tier is assigned to fire certain hammers that are aligned with characters on the belt. (1/5th of the hammers). The pulse has a variable time duration depending on the impression control single shot.
FL: Flip latch.
flip flop: An electronic latch having a common input that causes the status of the latch to reverse each time an input is received.
forms chute: The forms path under the printer between the forms entry and the forms tension assembly.
FRU: Field replaceable unit.

G

GLP: General logic probe.
Gnd: Ground.

H

HMR: Hammer.
Hz: Hertz.

I

IAD: Installation activity report.
IMPSS: Impression control single shot.
in: Inch.
INLK: Interlock.
IPO: Instant power off.
IR: Incident report.
I/O: Input/output.

K

kHz: Kilohertz.
K: Relay or contactor.

L

LED: Light emitting diode.
LPI: Lines per inch.
LPUL: Least positive up-level.
LRS: Lower ribbon shield.

M

M: Motor.
mA: Milliampere.
MAPs: Maintenance analysis procedures.
max: Maximum.
MHz: Megahertz.
MIM: Maintenance information manual.
min: Minimum.
mm: Millimeter.
monitor: To verify some specific function(s) such as the frequency of P.S.S. pulses.
MPUL: Most positive up-level.
ms: Millisecond.
MST: Monolithic system technology.
MUTS: Motor up to speed.

N

N: Negator, no, negative.
N/O: Normally open.
ns: Nanosecond.

O

OP: Operator.
open loop: The mode of control of a stepper motor that uses pulses from an external source, such as an oscillator.
option: To make available.
OSC: Oscillator.
oz: ounce.

P

P: Positive, plug, connector
Paper clamp: An electromechanical device used to hold the forms firmly in position during printing.
PED: Pedestal.
pedestal: A circuit that provides control of a common voltage to a driver circuit such as a carriage pedestal driver.
phototransistor(PT): An electronic device that switches voltage when light hits the light-sensing part of the device.
pitch: The distance between hammer positions or characters on the print belt. It is expressed as a rate, such as 10 hammers per inch.
PLB: Print line buffer.
PM: Preventive maintenance.
POT: Potentiometer.
POR: Power on reset.
POS: Position.
Print Belt (Typebelt): The belt is a steel band that has the type characters etched near the top and timing marks near the bottom.
Print Scan: The time for the print belt to move the physical distance between each character. A print scan has 5 subscans.
scan has 5 subscans.
Print Subscan (PSS) Pulses: Two PSS pulses are generated from each timing mark on the print belt. The pulses occur in sequence (subscan 1 through subscan 5, then repeated). Five subscans make-up one print scan. The pulses are used by the using system to synchronize the characters on the print belt to the correct hammer for addressing and firing. Each print subscan is assigned the certain group of hammers that are in alignment with the characters on the belt. (1/5 of the total hammers)
Print time: The time when print scans are occurring.
PS (P/S): Power supply.
PSS: Print subscan.
PT: Phototransistor.

R

R: Resistor.
Reg: Register.
restraint: Something that limits movement.
Ribbon drag: The force put on the ribbon by the non-driving ribbon motor to keep tension on the ribbon.

S

slew: A mode of stepper motor control. *See* closed loop.
SLT: Solid logic technology.
SS: Single shot.
Stepper Motor: A motor that is phase-controlled by dc pulses or "steps". The motor turns when it is pulsed, and stops turning when it is not pulsed.
sw: Switch.
sys: System.

T

t: Time.
TB: Terminal board/block.
TD: Time delay.
throat: The opening where the forms pass between the print unit casting and the hammer unit. On the 5211, when the print unit casting is closed and the print unit interlock is actuated, the signal 'throat closed' is sent to the system.
tinsel: A cord having metal strips that is used to decrease the electrostatic charge on the forms before stacking.
TP: Test point.
trig: Trigger.

U

UCSB: Universal character set buffer.
URS: Upper ribbon shield.
UTS: Up to speed.

V

V: Volts, voltage.
VOM: Volt-ohm-meter.
V1: Volume 1.
V2: Volume 2.

W

W: Watts.

Y

Y: Yes.
YEL: Yellow.

μ	micro
μf	microfarad
μs	microsecond

THIS PAGE INTENTIONALLY LEFT BLANK

READER'S COMMENT FORM

This form may be used to communicate your views about this publication. They will be sent to the author's department for whatever review and action, if any, is deemed appropriate. Comments may be written in your own language; use of English is not required.

IBM shall have the nonexclusive right, in its discretion, to use and distribute all submitted information, in any form, for any and all purposes, without obligation of any kind to the submitter. Your interest is appreciated.

Note: *Copies of IBM publications are not stocked at the location to which this form is addressed. Please direct any requests for copies of publications, or for assistance in using your IBM system, to your IBM representative or to the IBM branch office serving your locality.*

- Are you able to find information in this publication easily?
- Are the illustrations adequate, clear, and concise?
- Which of the following are included in your occupational responsibilities?

System operating	☐	Instructing	☐
Programming	☐	Supervising	☐
Maintaining	☐	Other	☐

- If other, please explain. _____

Your comments:

Note: *Staples can cause problems with automated mail sorting equipment. Please use pressure sensitive or other gummed tape to seal this form. If you would like a reply, please supply your name and address on the reverse side of this form.*

Thank you for your cooperation. No postage stamp necessary if mailed in the U.S.A. (Elsewhere, an IBM office or representative will be happy to forward your comments.)

READER'S COMMENT FORM

This form may be used to communicate your views about this publication. They will be sent to the author's department for whatever review and action, if any, is deemed appropriate. Comments may be written in your own language; use of English is not required.

IBM shall have the nonexclusive right, in its discretion, to use and distribute all submitted information, in any form, for any and all purposes, without obligation of any kind to the submitter. Your interest is appreciated.

Note: *Copies of IBM publications are not stocked at the location to which this form is addressed. Please direct any requests for copies of publications, or for assistance in using your IBM system, to your IBM representative or to the IBM branch office serving your locality.*

- Are you able to find information in this publication easily?
- Are the illustrations adequate, clear, and concise?
- Which of the following are included in your occupational responsibilities?

System operating	☐	Instructing	☐
Programming	☐	Supervising	☐
Maintaining	☐	Other	☐

- If other, please explain. _____

Your comments:

Note: *Staples can cause problems with automated mail sorting equipment. Please use pressure sensitive or other gummed tape to seal this form. If you would like a reply, please supply your name and address on the reverse side of this form.*

Thank you for your cooperation. No postage stamp necessary if mailed in the U.S.A. (Elsewhere, an IBM office or representative will be happy to forward your comments.)

EC 784017 01Mar78	PN 8324225 1 of 2	22-070

Reader's Comment Form

Fold and Tape | Please Do Not Staple | Fold and Tape

First Class
Permit 10
Endicott
New York

Business Reply Mail
No postage stamp necessary if mailed in the U.S.A.

Postage will be paid by:

International Business Machines Corporation
Department K10
P. O. Box 6
Endicott, New York 13760

Fold | Fold

If you would like a reply, *please print:*

Your Name _____

Company Name _____ *Department* _____

Street Address _____

City _____

State _____ *Zip Code* _____

IBM Branch Office serving you _____

International Business Machines Corporation
Data Processing Division
1133 Westchester Avenue, White Plains, N. Y. 10604

IBM World Trade Americas/Far East Corporation
Town of Mount Pleasant, Route 9, North Tarrytown, N. Y., U. S. A. 10591

IBM World Trade Europe/Middle East/Africa Corporation
360 Hamilton Avenue, White Plains, N. Y., U. S. A. 10601

Reader's Comment Form

Fold and Tape | Please Do Not Staple | Fold and Tape

First Class
Permit 10
Endicott
New York

Business Reply Mail
No postage stamp necessary if mailed in the U.S.A.

Postage will be paid by:

International Business Machines Corporation
Department K10
P. O. Box 6
Endicott, New York 13760

Fold | Fold

If you would like a reply, *please print:*

Your Name _____

Company Name _____ *Department* _____

Street Address _____

City _____

State _____ *Zip Code* _____

IBM Branch Office serving you _____

International Business Machines Corporation
Data Processing Division
1133 Westchester Avenue, White Plains, N. Y. 10604

IBM World Trade Americas/Far East Corporation
Town of Mount Pleasant, Route 9, North Tarrytown, N. Y., U. S. A. 10591

IBM World Trade Europe/Middle East/Africa Corporation
360 Hamilton Avenue, White Plains, N. Y., U. S. A. 10601

EC 784017 01Mar78	PN 8324225 2 of 2	22-080