This drawing and specifications, herein, are the property of Digital Equipment Corporation and shall not be reproduced or copied or used in whole or in part as the basis for the manufacture or sale of items without written permission.

MASTER DRAWING LIST

DWG. NO.	REV. LET.	NO. OF SHEETS	TITLE
D-UA-RKØ1-Ø-Ø	D	1	RKØ1 ASSY
A-PL-RKØ1-Ø-Ø	D	1	RKØ1 ASSY (PL)
D-DI-RKØ1-Ø-1	C	3	DRAWING INDEX LIST (RKØ1)
A-ML-RKØ1-X		1	RKØ1-X
A-ML-RKØ8-0		1	RKØ8-Ø
E-IC-RKØ1-Ø-2	B	1	POWER WIRING AC & DC
A-AL-RK01-0-3			RK08 HARDWARE LIST
A-SL-RK01-0-4			RK08 SOFTWARE PACKAGE
A-SP-RK01-0-5			CHECKOUT PROCEDURE
A-SP-RK01-0-6			DISK CARTRIDGE MEMORY
A-SP-RK01-0-7			ACCEPTANCE PROCEDURE

REVISIONS			
REV.	DATE	CHG. NO.	APP'D.
A	5/70	00001	W.M.
B	6/70	00002	J.M.
C	8/70	00004	J.M.
D	9/70	00005	J.M.
E	9/70	RK01X-2	J.M.
F	11/70	RK01-7	J.M.

DRN.	MCGEE	DATE 1/13/7
CHK'D.		DATE
ENG.		DATE
PROJ. ENG.		DATE
PROD.		DATE
FIRST USED ON	RKØ1	
SCALE	NONE	
SHEET	1 OF 1	

digital EQUIPMENT CORPORATION
MAYNARD, MASSACHUSETTS

TITLE: DISK DRIVE RK01

SIZE	CODE	NUMBER	REV.
A	ML	RKØ1-Ø	F

DIST.

DEC FORM NO. 16-1033
DRA 103

This drawing and specifications, herein, are the property of Digital Equipment Corporation and shall not be reproduced or copied or used in whole or in part as the basis for the manufacture or sale of items without written permission.

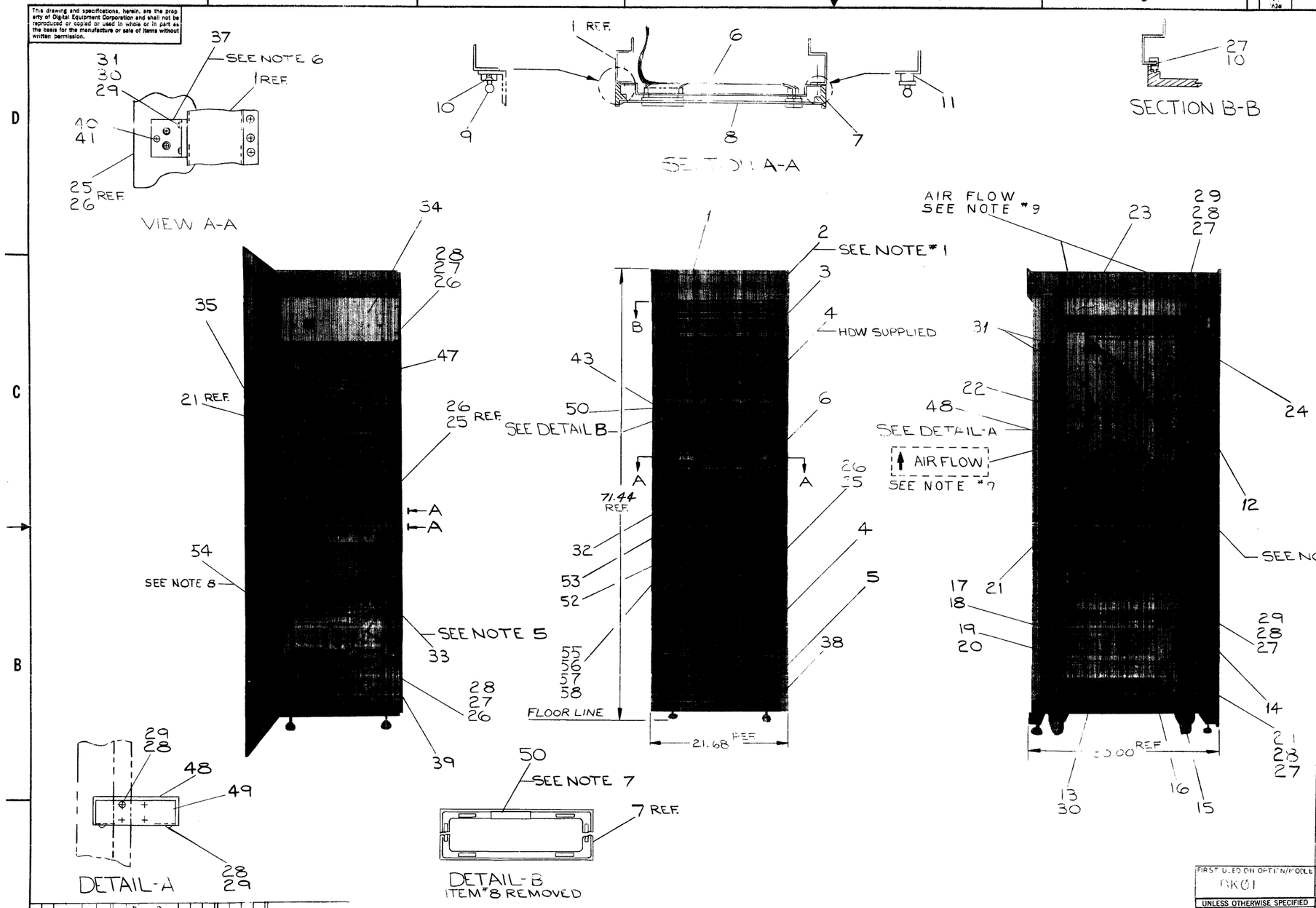

NOTES.

1. LOGO INLAY TO BE DETERMINED BY SYSTEM USING THE RKØ1
2. FOR H95Ø CABINET INFORMATION REFER TO D-OC-H95Ø-Ø-Ø
3. FOR DRAWING INDEX LIST REFER TO D-DI-RKØ1-Ø-1
4. EXTERNAL CABLES NOT PART OF THIS ASS'Y. SHOWN FOR REF ONLY.
5. FOR INSTALLATION IN UNIT REFER TO PURCHASE SPEC. NO. 1209788
6. ITEM #37 USED FOR SHIPPING ONLY.
7. PLACE ITEM #8 TAPE BETWEEN RAISED AREAS ON SNAP ON BEZEL ITEM #7 TO SECURE ITEM #8 PANEL SWITCH NO 1 & ITEM #51 PANEL SWITCH NO 2
8. FOR INSTALLATION OF ITEM #54 (DIODE) REFER TO PRINT E-IC-RKØ1-Ø-2, NOTE 5.
9.

COMPUTER	AIR FLOW DIRECTION
PDP-8	UP
PDP-8I	UP
LINC-8	UP
PDP-8L	DOWN
PDP-12	DOWN

LOCATION OF SPEED NUTS

LOCATE ALL NUTS BY COUNTING HOLES DOWN FROM TOP OF CAB FRAME SUPPORT

FRONT HOLE MEMBERS				REAR HOLE MEMBERS	
3	21	39	84 102	3	102
7	25	43	86 106	10	106
12	30	57	93	62	
16	34		97	66	

LEFT SIDE HOLE MEMBERS		RIGHT SIDE HOLE MEMBERS	
LEFT REAR	LEFT FRONT	RIGHT REAR	RIGHT FRONT
1 81	1 81	2 81	2 81
5 98	5 98	5 98	5 98
80 99	80 99	80 99	80 99

QTY.	DESCRIPTION	PART NO.	ITEM NO.

PARTS LIST

FIRST USED ON OPTION/MODEL: RKØ1

UNLESS OTHERWISE SPECIFIED
UNLESS OTHERWISE SPECIFIED DIMENSION IN INCHES
TOLERANCES: DECIMALS ±.005, FRACTIONS ±1/64, ANGLES ±0°30'
FINAL SURFACE QUALITY ✓
REMOVE BURRS AND BREAK SHARP CORNERS

MATERIAL: —/—

FINISH: —/—

DRN. — DATE 12-22-69
CHK'D. — DATE 3/24/70
ENG. — DATE 4-28-70
PROJ. ENG. — DATE 4-28-70
PROD. — DATE 4-29-70
FIRST USED ON: —/—
SCALE: NONE
SHEET 1 OF 3

digital EQUIPMENT CORPORATION
MAYNARD MASSACHUSETTS

TITLE: RKØ1 ASSY

SIZE D | CODE UA | NUMBER RKØ1-Ø-Ø | REV. D

DIST.

REVISIONS

CHK	CHANGE NO.	REV.
	RK01-00001	A
	MINOR	
	RK01-00003	B
	E. REED	
	RK01-00004	C
	MILTON	
	RK01-00007	D
	MILTON	

DEC FORM NO. DRC

This drawing and specifications, herein, are the property of Digital Equipment Corporation and shall not be reproduced or copied or used in whole or in part as the basis for the manufacture or sale of items without written permission.

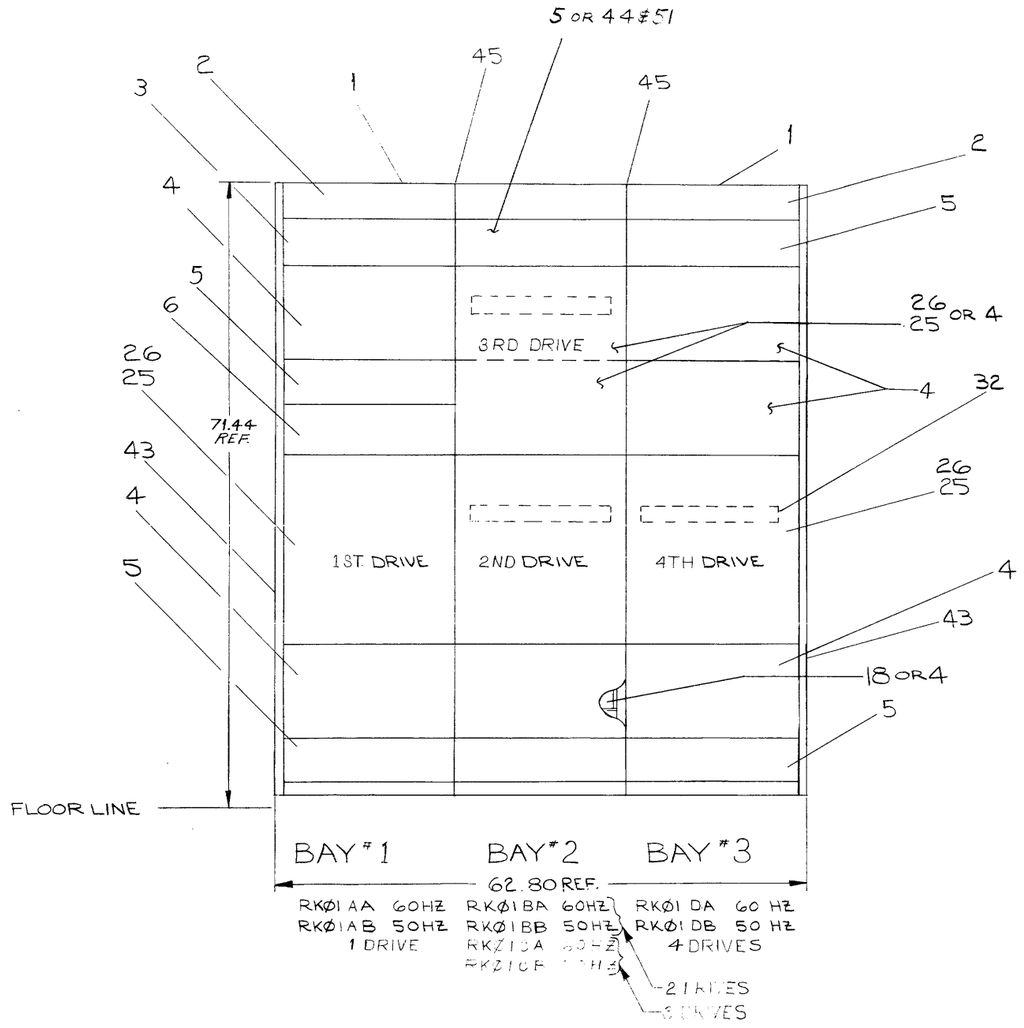

LOCATION OF SPEED NUTS ITEM #27 BAY #2-3 OR 4 DRIVES

LOCATE ALL NUTS BY COUNTING HOLES DOWN FROM TOP OF CAB FRAME SUPPORT

FRONT HOLE MEMBERS	REAR HOLE MEMBERS
3 21 93 7 97 102 84 106 57 88	26 30 62 66

LEFT SIDE HOLE MEMBER		RIGHT SIDE HOLE MEMBER	
LEFT REAR	LEFT FRONT	RIGHT REAR	RIGHT FRONT
44 80 98 45 81 99	44 80 99 45 81 98	44 80 99 45 81 98	44 80 99 45 81 98

LOCATION OF SPEED NUTS ITEM #27 BAY #3-4 DRIVES OR BAY 2 W/2 DRIVES

LOCATE ALL NUTS BY COUNTING HOLES DOWN FROM TOP OF CAB FRAME SUPPORT

FRONT HOLE MEMBERS	REAR HOLE MEMBERS
3 25 57 102 7 30 84 106 12 34 88 16 39 93 21 43 97	62 66

LEFTSIDE HOLE MEMBER		RIGHT SIDE HOLE MEMBER	
LEFT REAR	LEFT FRONT	RIGHT REAR	RIGHT FRONT
80 81	80 81	80 81	80 81

QTY.	DESCRIPTION	PART NO.	ITEM NO.

PARTS LIST

FIRST USED ON OPTION/MODEL: RKØ1

DO NOT SCALE DRAWING

UNLESS OTHERWISE SPECIFIED
DIMENSION IN INCHES
TOLERANCES
DECIMALS ± .005 FRACTIONS ± 1/64 ANGLES ± 0°30'
FINAL SURFACE QUALITY
REMOVE BURRS AND BREAK SHARP CORNERS

MATERIAL

FINISH

DRN DATE 12-30-69
CHK'D DATE 3/29/70
ENG. DATE
PROJ. ENG. DATE 4-28-70
PROD. DATE 4-29-70

NEXT HIGHER ASSY

SCALE NONE
SHEET 2 OF 3

digital EQUIPMENT CORPORATION
MAYNARD, MASSACHUSETTS

TITLE: RKØ1 ASSY

SIZE D CODE UA NUMBER RKØ1-Ø-Ø REV D
DIST.

REVISIONS: REV. | CHANGE NO. | CHK

DEC FORM NO. DRD 100

This drawing and specifications, herein, are the property of Digital Equipment Corporation and shall not be reproduced or copied or used in whole or in part as the basis for the manufacture or sale of items without written permission.

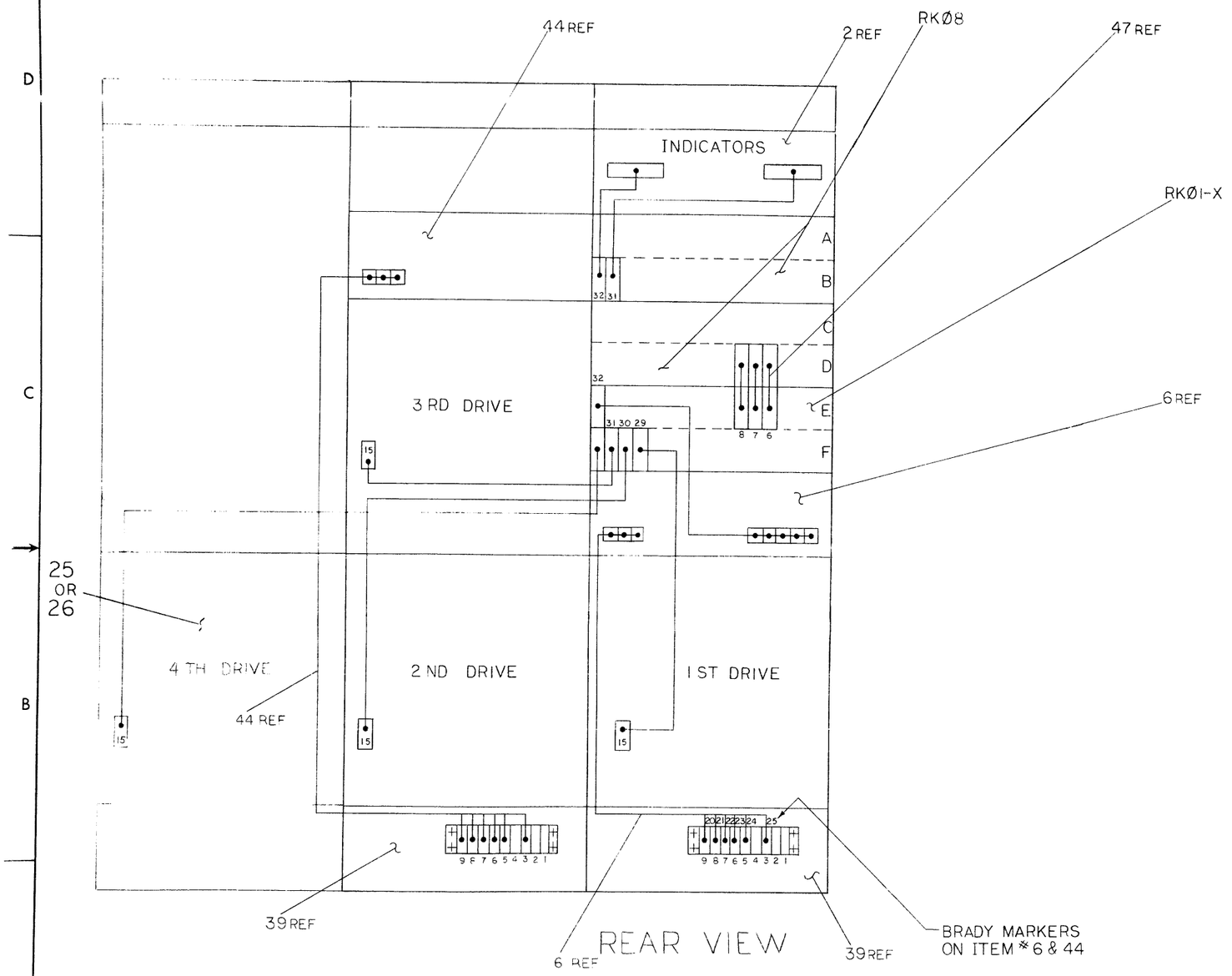

QTY.	DESCRIPTION	PART NO.	ITEM NO.

PARTS LIST

FIRST USED ON OPTION/MODEL: RKØ1

DO NOT SCALE DRAWING

UNLESS OTHERWISE SPECIFIED
DIMENSION IN INCHES
TOLERANCES
DECIMALS ± .005 FRACTIONS ± 1/64 ANGLES ± 0°30'
FINAL SURFACE QUALITY √
REMOVE BURRS AND BREAK SHARP CORNERS

MATERIAL —

FINISH —

DRN.	C. B McCoy	DATE 3-20-70
CHK'D		DATE
ENG.		DATE
PROJ. ENG.		DATE 4 25 70
PROD.		DATE 4-29-70

NEXT HIGHER ASSY —

SCALE NONE

SHEET 3 OF 3

digital EQUIPMENT CORPORATION
MAYNARD, MASSACHUSETTS

TITLE: RKØ1 ASSY

SIZE	CODE	NUMBER	REV
D	UA	RKØ1-Ø-Ø	D

DIST.

REVISIONS

REV	CHANGE NO.	CHK

DEC FORM NO DRD 100

DIGITAL EQUIPMENT CORPORATION
MAYNARD, MASSACHUSETTS

PARTS LIST

MADE BY J. CAHILL	CHECKED J. MADDEN	SECTION
DATE 1-5-70	DATE 4-24-70	1
ENG [signature]	PROD [signature]	ISSUED SECT.
DATE 4-28-70	DATE 4-29-70	1

ITEM NO.	DWG NO./PART NO.	DESCRIPTION	QUANTITY/VARIATION											
			RKØ1-AA (6Ø HZ)	RKØ1-AB (5Ø HZ)	RKØ1-BA (6Ø HZ)	RKØ1-BB (5Ø HZ)	RKØ1-CA (6Ø HZ)	RKØ1-CB (5Ø HZ)	RKØ1-DA (6Ø HZ)	RKØ1-DB (5Ø HZ)				
1	C-PL-7006501-13-Ø	CABINET FRAME ASSY	1	1	1	1	0	0	1	1				
2	C-UA-H95Ø-LB-Ø	H95Ø-LB FRAME PNL	1	1	1	1	0	0	1	1				
3	C-PL-7006331-3-Ø	INDICATOR PANEL ASSY	1	1	0	0	0	0	0	0				
4	D-UA-H95Ø-Q-Ø	H95Ø-Q 19 IN COVER PNL (10.5)	2	2	3	3	0	0	2	2				
5	D-UA-H95Ø-P-Ø	H95Ø-P 19 IN COVER PNL (5.25)	1	1	1	1	0	0	2	2				
6	E-AD-7006672-0-0	BRKT SWITCH ASSY NO 1	1	1	0	0	0	0	0	0				
7	D-SC-1209226-0-0	5¼ SNAP ON BEZEL	1	1	0	0	1	1	0	0				
8	D-IA-7407875-0-0	PANEL SWITCH NO 1	1	1	0	0	0	0	0	0				
9	C-SC-1209224-0-0	LATCH MOLDING	16	16	16	16	0	0	16	16				
10	9006073-2	SCR PHL H FLAT 10-32 X .50	12	12	0	0	4	4	0	0				
11	B-MD-7407789-0-0	SPACER	8	8	0	0	4	4	0	0				
12	J-IA-7006731-0-0	HARNESS MAIN WIRING	1	1	0	0	0	0	0	0				
13	9006024-2	SCR PHL H FLAT 6.32 X .5 SST	8	8	0	0	8	8	0	0				
14	D-AD-7006484-0-0	BRKT HOLD DOWN ASSY	2	2	2	2	2	2	2	2				
15	C-MD-7407396-0-0	BRKT HOLD DOWN	2	2	0	0	2	2	0	0				
16	D-MD-7407839-0-0	RUNNER	2	2	0	0	2	2	0	0				
17	3009795	POWER SUPPLY CMD 60 HZ	1	0	0	0	1	0	0	0				
18	3009795-01	POWER SUPPLY CMD 50 HZ	0	1	0	0	0	0	1	0				
19	9006243	HEX H CAP .25-20 X .75	4	4	0	0	4	4	0	0				
20	9007991	NUT KEPS HEX .25-20	4	4	0	0	4	4	0	0				
21	D-IA-7006604-0-0	IO HARNESS	1	1	1	1	1	1	1	1				
22	C-UA-RKØ1-X-Ø	RKØ1-X	1	1	0	0	0	0	0	0				

TITLE	ASSY NO.	SIZE	CODE	NUMBER	REV.	ECO NO.
RKØ1 ASSY	D-UA-RKØ1-Ø-Ø	A	PL	RKØ1-Ø-Ø	D	RKOI-00007
	SHEET 1 OF 3	DIST.	G			

DEC FORM NO. 16-1031
DRA 110

DIGITAL EQUIPMENT CORPORATION
MAYNARD, MASSACHUSETTS

PARTS LIST

MADE BY J. CAHILL	CHECKED J. MADDEN	SECTION
DATE 1-5-70	DATE 4-24-70	1
ENG W Mino	PROD W Mueller	ISSUED SECT.
DATE 4-28-70	DATE 4-29-70	1

ITEM NO.	DWG NO. / PART NO.	DESCRIPTION	QUANTITY / VARIATION											
			RKØ1-AA (6Ø HZ)	RKØ1-AB (5Ø HZ)	RKØ1-BA (6Ø HZ)	RKØ1-BB (5Ø HZ)	RKØ1-CA (6Ø HZ)	RKØ1-CB (5Ø HZ)	RKØ1-DA (6Ø HZ)	RKØ1-DB (5Ø HZ)				
23	D-UA-716-0-0	716 POWER SUPPLY	1	1	0	0	0	0	0	0				
24	D-AD-7005909-0-0	DISTRIBUTION PANEL ASSY	1	1	0	0	0	0	0	0				
25	3009793	DISK DRIVE 60 HZ	1	0	1	0	1	0	1	0				
26	3009793-1	DISK DRIVE 50 HZ	0	1	0	1	0	1	0	1				
27	9007786	NUT SPEED #C31758-032-27 TINNERMAN	93	93	81	81	81	81	65	65				
28	9006074-3	SCR PHL TURS H 10-32 X.62 SST	93	93	81	81	81	81	65	65				
29	9007651	WASH EXT TOOTH #10	93	93	81	81	81	81	65	65				
30	9006560	NUT KEPS #6-32	8	8	0	0	8	8	0	0				
31	C-UA-RKØ8-Ø-Ø	RKØ8 POS LOGIC	1	1	0	0	0	0	0	0				
32	C-UA-RKØ1-K-Ø	DISK CARTRIDGE RKØ1-K	1	1	1	1	1	1	1	1				
33	1209788	AC-DC CABLE	1	1	1	1	1	1	1	1				
34	D-UA-854-Ø-Ø	POWER CONTROL 854	1	1	0	0	0	0	0	0				
35	E-AD-7006540-1-0	DOOR REAR ASSY	1	1	1	1	0	0	1	1				
36	E-AD-7006540-2-0	DOOR REAR ASSY	0	0	0	0	1	1	0	0				
37	C-MD-7407692-0-0	BRKT SHIPPING	2	2	2	2	2	2	2	2				
~~38~~	~~C-UA-H95Ø-M-Ø~~	~~H95Ø-M COVER PNL 1.75~~	~~1~~	~~1~~	~~1~~	~~1~~	~~0~~	~~0~~	~~1~~	~~1~~				
39	1209603	H721 POWER SUPPLY	1	1	0	0	0	0	0	0				
40	9007862	HEX HD SCR 5/16-18 X 5/8 SST	2	2	2	2	2	2	2	2				
41	9007788	WASH SPLIT LOCK 5/16	2	2	2	2	2	2	2	2				
42	9006074-2	SCR PHL FLAT H 10-32 X .62	8	8	8	8	8	8	8	8				
43	D-UA-H952-A-Ø	H952-A END PANEL	2	2	0	0	0	0	0	0				
44	E-AD-7006764-0-0	BRKT SWITCH ASSY NO. 2					1	1	0	0				

TITLE	ASSY NO.	SIZE	CODE	NUMBER	REV	ECO NO.
RKØ1 ASSY	D-UA-RKØ1-Ø-Ø	A	PL	RKØ1-Ø-Ø	D	
	SHEET 2 OF 3	DIST.	G			

DEC FORM NO. 16-1031
DRA 110

DIGITAL EQUIPMENT CORPORATION
MAYNARD, MASSACHUSETTS

PARTS LIST

MADE BY J. CAHILL	CHECKED J. MADDEN	SECTION 1
DATE 1-5-70	DATE 4-24-70	
ENG W. Irving	PROD W. Hamilton	ISSUED SECT. 1
DATE 4-28-70	DATE 4-29-70	

ITEM NO.	DWG NO./PART NO.	DESCRIPTION	QUANTITY/VARIATION RKØ1-AA (60 HZ)	RKØ1-AB (50 HZ)	RKØ1-BA (60 HZ)	RKØ1-BB (50 HZ)	RKØ1-CA (60 HZ)	RKØ1-CB (50 HZ)	RKØ1-DA (60 HZ)	RKØ1-DB (50 HZ)
45	C-UA-H952-GA-Ø	H952-GA FILLER STRIP ASSY			1	1	0	0	1	1
~~46~~	~~C-UA-H952-GB-Ø~~	~~H952-GB FILLER STRIP ASSY~~			~~1~~	~~1~~	~~0~~	~~0~~	~~1~~	~~1~~
47	C-IA-7006111-1-0	CABLE M9Ø1 TO M9Ø1	3	3	0	0	0	0	0	0
48	D-AD-7006674-0-0	FAN ASSY	1	1	0	0	0	0	0	0
49	C-MD-7407825-0-0	SUPPORT FAN	2	2	0	0	0	0	0	0
50	9007834	4032 TAPE 1/32 X 1/2	A/R	A/R	A/R	A/R	A/R	A/R	A/R	A/R
51	D-IA-7407876-0-0	PANEL SWITCH NO. 2					1	1	0	0
52	D-AD-7006893-0-0	DOOR ASSY FRONT	1	1	1	1	1	1	1	1
53	SUPPLIED W/DOOR	SCR PHL FLAT H 8-32 x.62 BLACK	2	2	2	2	2	2	2	2
54	1100113	DIODE D662 (BLACK)	1	1	1	1	2	2	2	2
55	A-SS-5308754-2	DRIVE Ø DECAL	AR	AR	AR	AR	AR	AR	AR	AR
56	A-SS-5308754-4	DRIVE 1 DECAL	AR	AR	AR	AR	AR	AR	AR	AR
57	A-SS-5308754-6	DRIVE 2 DECAL	AR	AR	AR	AR	AR	AR	AR	AR
58	A-SS-5308754-8	DRIVE 3 DECAL	AR	AR	AR	AR	AR	AR	AR	AR

TITLE	ASSY NO.	SIZE	CODE	NUMBER	REV.	ECO NO.
RKØ1 ASSY	D-UA-RKØ1-Ø-Ø	A	PL	RKØ1-Ø-Ø	D	
	SHEET 3 OF 3	DIST.	G			

DEC FORM NO.
DRA 110

This drawing and specifications, herein, are the property of Digital Equipment Corporation and shall not be reproduced or copied or used in whole or in part as the basis for the manufacture or sale of items without written permission.

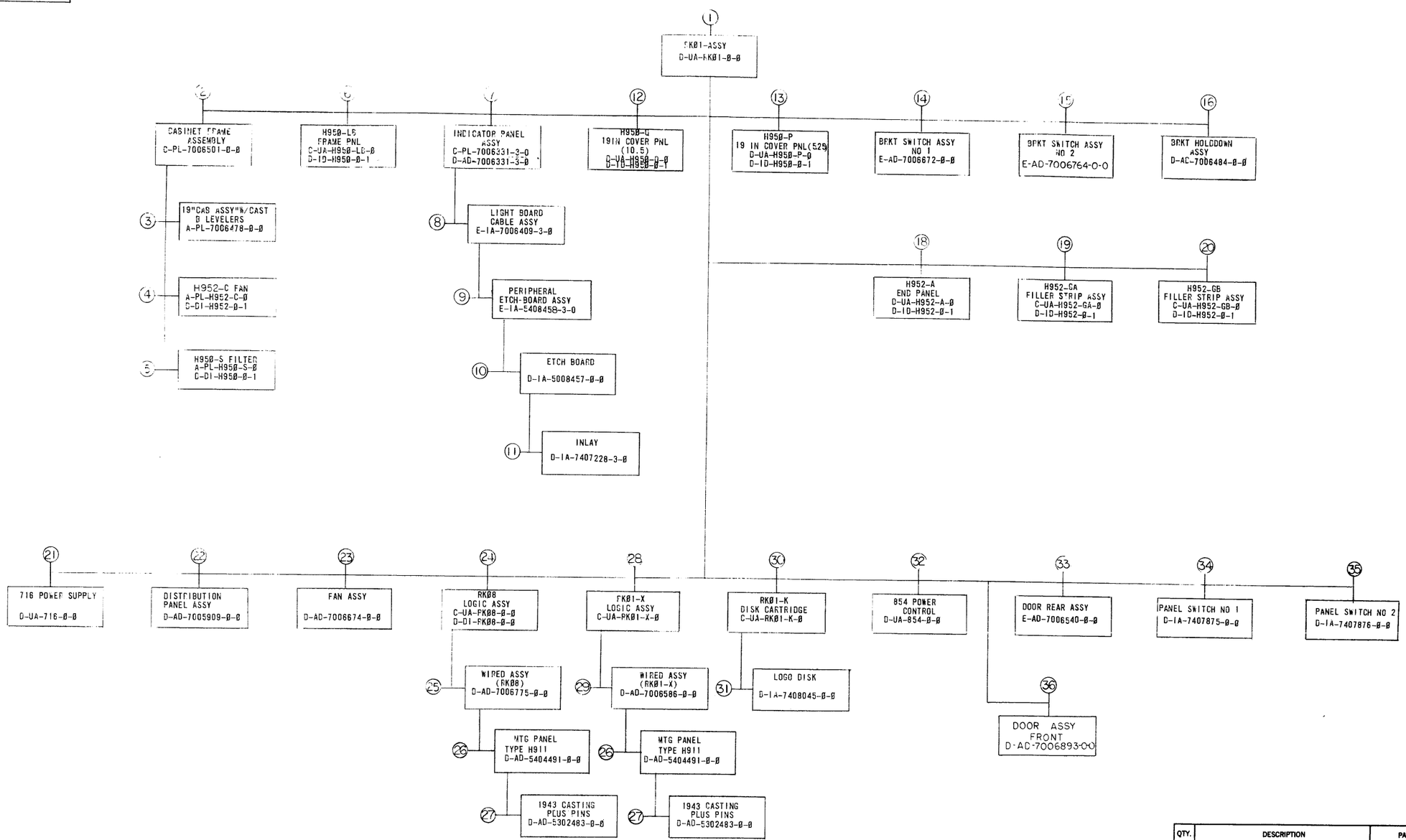

QTY.	DESCRIPTION	PART NO.	ITEM NO.
	PARTS LIST		

FIRST USED ON OPTION/MODEL: RKØ1

DO NOT SCALE DRAWING

UNLESS OTHERWISE SPECIFIED DIMENSION IN INCHES
TOLERANCES
DECIMALS ± .005 FRACTIONS ± 1/64 ANGLES ± 0°30'
FINAL SURFACE QUALITY ✓
REMOVE BURRS AND BREAK SHARP CORNERS

MATERIAL

FINISH

DRN. Cahill DATE 3/19/70
CHK'D. DATE 4/2/70
ENG. DATE
PROJ. ENG. DATE
PROD. DATE 4-29-70

NEXT HIGHER ASSY A-ML-RKØ1-

SCALE

SHEET 1 OF 3

digital EQUIPMENT CORPORATION MAYNARD, MASSACHUSETTS

TITLE: DRAWING INDEX LIST RKØ1

SIZE D CODE DI NUMBER RKØ1-Ø-1 REV. C

DIST.

REVISIONS

CHK	CHANGE NO.	REV.
	RKØ1-00001	A
	MINOR	
	RKØ1-00005	B
	MILTON	

DEC FORM NO DRD 100

This drawing and specifications, herein, are the property of Digital Equipment Corporation and shall not be reproduced or copied or used in whole or in part as the basis for the manufacture or sale of items without written permission.

SIZE D | CODE DI | NUMBER RKØI-Ø-1 | REV

MECHANICAL

FIND NO.	DESCRIPTION	PART NO.	DEPT USAGE PROD	CUST	F/C
1	RKØ1 ASSY	D-UA-RKØ1-Ø-Ø			
	RKØ1 ASSY (PL)	A-PL-RKØ1-Ø-Ø			
	5.25 SNAP ON BEZEL	D-SC-1209226-0-0			
	LATCH MOLDING	C-SC-1209224-0-0			
	HARNESS MAIN WIRING	A-IA-7006731-0-0			
	BRKT HOLD DOWN	C-MD-7407396-0-0			
	RUNNER	C-MD-7407839-0-0			
	ID HARNESS	D-IA-7006604-0-0			
	BRKT SHIPPING	C-MD-7407692-0-0			
	CABLE M9Ø1 TO M9Ø1	C-IA-7006111-1-0			
	SUPPORT FAN	C-MD-7407825-0-0			
2.	CABINET FRAME ASSEMBLY	C-PL-7006501-0-0			
3.	19 IN CAB ASSY W CAST AND LEVELERS	A-PL-7006478-0-0			
4	H952-C FAN	A-PL-H952-C-0			
	DRAWING INDEX H952	D-DI-H952-C-1			
5	H95Ø-S FILTER	A-PL-H95Ø-S-Ø			
	DRAWING INDEX H95Ø	D-DI-H95Ø-Ø-1			
6	H95Ø-L8 FRAME PNL	C-UA-H95Ø-L8-Ø			
	DRAWING INDEX H95Ø	D-DI-H95Ø-Ø-1			
7.	INDICATOR PANEL ASSY	D-AD-7006331-3-0			
	INDICATOR PANEL ASSY (PL)	C-PL-7006331-3-0			
	5.25 SNAP ON BEZEL	E-SC-1209226-0-0			
	BENELEX	D-IA-7407222-0-0			
	LATCH MOLDING	C-SC-1209224-0-0			
	MTG BRKT BENELEX	C-MD-7407086-3-0			
8.	LIGHT BOARD CABLE ASSY	E-IA-7006409-0-0			
9.	PERIPHERAL ETCH BOARD ASSY	E-IA-5408458-3-0			
10.	ETCH BOARD	D-IA-5008457-0-0			
11	LABEL	D-IA-7407228-3-0			
	SILK SCREEN (WHT)	C-SS-7407228-0-4			
	SILK SCREEN (BLK)	C-SS-7407228-0-2			
12	H95Ø-P 19IN COVER PNL (10.5)	D-UA-H95Ø-P-Ø			
	DRAWING INDEX H95Ø	D-DI-H95Ø-Ø-1			
13	H95Ø-P 19IN COVER PNL (5.25)	D-UA-H95Ø-P-Ø			
	DRAWING INDEX H95Ø	D-DI-H95Ø-Ø-1			
14	BRKT SWITCH ASSY NO 1	E-AD-7006672-Ø-Ø			
	BRKT SWITCH ASSY NO 1 (PL)	A-PL-7006672-Ø-Ø			
	SWITCH BRACKET	D-MD-7407831-Ø-Ø			
15	BRKT SWITCH ASSY NO 2	E-AD-7006764-0-0			
	BRKT SWITCH ASSY NO 2 (PL)	A-PL-7006764-0-0			
	SWITCH BRACKET	D-MD-7408145-0-0			
16.	BRKT HOLDDOWN ASSY	D-AD-7006484-0-0			
	BRKT HOLDDOWN ASSY	A-PL-7006484-0-0			
	BRKT HOLDDOWN	C-MD-7407396-0-0			
	BAR GUIDE	C-MD-7407398-0-0			
	RUNNER	D-MG-7407839-0-0			
18.	H952-A END PANEL	D-UA-H952-A-Ø			
	DRAWING INDEX H952	D-DI-H952-Ø-1			
19.	H952-GA FILLER STRIP ASSY	C-UA-H952-GA-Ø			
	DRAWING INDEX H952	D-DI-H952-Ø-1			
20	H952-GS FILLER STRIP ASSY	C-UA-H952-GB-Ø			
	DRAWING INDEX H952	D-DI-H952-Ø-1			
21.	716 POWER SUPPLY	D-UA-716-0-0			
	716 POWER SUPPLY (PL)	A-PL-716-0-0			
22.	DISTRIBUTION PANEL ASSY	D-AD-7005909-0-0			
	DISTRIBUTION PANEL ASSY (PL)	A-PL-7005909-0-0			
	PANEL BACK DISTRIBUTION	C-MC-7406765-0-0			
	PANEL DISTRIBUTION	D-IA-7406764-0-0			
	DECALS DISTRIBUTION PANEL	A-DC-7406766-0-0			
23.	FAN ASSY	D-AD-7006674-0-0			
	FAN ASSY (PL)	A-PL-7006674-0-0			
	FAN SCREEN	C-MD-7404881-0-0			
	FAN HOUSING	D-MD-7407835-0-0			
	ARROW DECAL	A-DC-7408026-0-0			
24.	RKØ8 LOGIC ASSY	C-UA-RKØ8-Ø-Ø			
	RKØ8 LOGIC ASSY (PL)	A-PL-RKØ8-Ø-Ø			
	PANEL LEFT END ASSY	C-IA-5404490-Ø-Ø			
	RIGHT END PANEL	C-MD-5302486-Ø-Ø			
25.	WIRED ASSY (RKØ8)	D-AD-7006775-Ø-Ø			
	WIRED ASSY (RKØ8) (PL)	A-PL-7006775-Ø-Ø			
	LOGIC FRAME DECALS	A-DC-7406371-Ø-Ø			
26.	MTG PANEL TYPE H911	D-AD-5404491-Ø-Ø			
	MTG PANEL TYPE H911	A-PL-5404491-Ø-Ø			
	288 PIN CONN BLOCK TYPE	E-SC-1205348-Ø-Ø			
27.	1943 CASTING PLUS PINS	D-AD-5302483-Ø-Ø			
	1943 CASTING PLUS PINS (PL)	A-PL-5302483-Ø-Ø			
	1943 FRAME CASTING	E-MD-1202885-Ø-Ø			
28	RKØ1-X LOGIC ASSY	C-UA-RKØ1-X-Ø			
	RKØ1-X LOGIC ASSY (PL)	A-PL-RKØ1-X-Ø			
	PANEL LEFT END ASSY	C-IA-5404490-Ø-Ø			
	RIGHT END PANEL	C-MD-5302486-Ø-Ø			
29.	WIRED ASSY (RKØ1-X)	D-AD-7006586-Ø-Ø			
	WIRED ASSY (RKØ1-X) (PL)	A-PL-7006586-Ø-Ø			
	LOGIC FRAME DECALS	A-DC-7406371-Ø-Ø			
30	RKØ1-K DISK CARTRIDGE	C-UA-PKØ1-K-Ø			
31.	LOGO DISK	B-IA-7408045-Ø-Ø			
	SILK SCREEN	A-SS-7408045-Ø-1			
32.	854 LOWER CONTROL	D-UA-854-Ø-Ø			
	854 POWER CONTROL (PL)	A-PL-854-Ø-Ø			
33.	DOOR REAR ASSY	E-AD-7006540-Ø-Ø			
	DOOR REAR ASSY (PL)	A-PL-7006640-Ø-Ø			
	DOOR REAR FRAME & SKIN MTG	E-IA-7407606-C-0			
	PIN DOOR	6-MD-7406671-Ø-Ø			
	BUSHING PIVOT	D-MC-7406202-Ø-Ø			
	PIN DOOR	B-MD-7406672 Ø-Ø			
	PIN DOOR RETAINER	B-MD-7406670-Ø-Ø			
34.	PANEL SWITCH NO 1	D-IA-7407875-Ø-Ø			
	SILK SCREEN WHT	D-SS-7407875-Ø-1			
35.	PANEL SWITCH NO 2	D-IA-7407876-Ø-Ø			
	SILK SCREEN NO 2	D-SS-7407876-Ø-1			
36	DOOR ASSY FRONT	D-AD-7006893-0-0			
	DOOR ASSY FRONT (PL)	A-PL-7006893-0-0			
	HINGE	C-MD-7408178-0-0			
	SPACER	C-MD-7408180-0-0			
	HINGE RET	C-IA-7408184-0-0			
	DOOR FRAME	C-IA-7408191-0-0			
	DOOR PLEXIGLASS	D-IA-7408190-0-0			

REVISIONS: REV. | CHANGE NO. | CHK

FIRST USED ON OPTION / MODEL: RKØ1

DO NOT SCALE DRAWING

UNLESS OTHERWISE SPECIFIED
DIMENSION IN INCHES
TOLERANCES
DECIMALS ± .005 | FRACTIONS ± 1/64 | ANGLES ± 0°30'
FINAL SURFACE QUALITY
REMOVE BURRS AND BREAK SHARP CORNERS

MATERIAL

FINISH

PARTS LIST

QTY.	DESCRIPTION	PART NO.	ITEM NO.

DRN. DATE
CHK'D. DATE
ENG. DATE
PROJ. ENG. DATE 4-28-78
PROD. DATE

digital EQUIPMENT CORPORATION MAYNARD, MASSACHUSETTS

TITLE: DRAWING INDEX LIST RKØ1

NEXT HIGHER ASSY: A-ML-RKØ1-Ø

SIZE D | CODE DI | NUMBER RKØ1-Ø-1 | REV C

SCALE

SHEET ? OF ?

DIST.

REC FORM NO DRE 100

This drawing and specifications, herein, are the property of Digital Equipment Corporation and shall not be reproduced or copied or used in whole or in part as the basis for the manufacture or sale of items without written permission.

REV A38 — NUMBER 1-Ø-1ØA1 — CODE 3215

FIND NO	ELECTRICAL DESCRIPTION	PART NO	DEPT USAGE PROD	CUST	F/C
1.	RKØ1 MASTER LIST	A-ML-RKØ1-Ø			
*	POWER WIRING AC & DC	E-IC-RKØ1-Ø-2			
	FINAL INDEX	KØ1-1			
9.	LIGHT BOARD CABLE ASSY	E-IA-7006409-2-2			
9.	PERIPHERAL ETCH BOARD ASSY	E-IA-5408458-3-Ø			
	PERIPHERAL ETCH BOARD (CS)	D-CS-5408458-Ø-1			
14.	BRKT SWITCH ASSY NO 1	E-AD-7006672-Ø-Ø			
	BRKT SWITCH ASSY NO 1 (PL)	A-PL-7006672-Ø-Ø			
15.	BRKT SWITCH ASSY NO 2	E-AD-7006764-Ø-Ø			
	BRKT SWITCH ASSY NO 2 (PL)	A-PL-7006764-Ø-Ø			
21.	716 POWER SUPPLY	D-UA-716-Ø-Ø			
	716 POWER SUPPLY (PL)	A-PL-716-Ø-Ø			
	716 POWER SUPPLY (CS)	C-CS-716-Ø-1			
22.	DISTRIBUTION PANEL ASSY	D-AD-7005909-Ø-Ø			
	DISTRIBUTION PANEL ASSY (PL)	A-PL-7005909-Ø-Ø			
23.	FAN ASSY	D-AD-7006674-Ø-Ø			
	FAN ASSY (PL)	A-PL-7006674-Ø-Ø			
24.	PKØ8 MASTER LIST	A-ML-PKØ8-Ø			
	MODULE UTILIZATION (PKØ8-Ø)	K-MU-PKØ8-Ø-29			
	MODULE UTILIZATION (PKØ8-Ø) (PL)	K-PL-PKØ8-Ø-29			
	WIRE LIST (PKØ8)	K-WL-PKØ8-Ø-27			
	IOT DECODING	D-BS-PKØ8-Ø-Ø5			
	SKIP AND BREAK	D-BS-PKØ8-Ø-Ø6			
	MAINTENANCE REGISTER	D-BS-PKØ8-Ø-Ø7			
	MAJOR SEQUENCER	D-BS-PKØ8-Ø-Ø8			
	P/R COMMAND FIND SEL END TRANS	D-BS-PKØ8-Ø-Ø9			
	READ	D-BS-PKØ8-Ø-1Ø			
	WRITE	D-BS-PKØ8-Ø-11			
	DATA BUFFER	D-BS-PKØ8-Ø-12			
	DATA SHIFT REGISTER	D-BS-PKØ8-Ø-13			
	LOGITUDINAL PARITY	D-BS-PKØ8-Ø-14			
	STATUS REGISTER	D-BS-PKØ8-Ø-15			
	SECTOR ADDRESSING	D-BS-PKØ8-Ø-16			
	BIT AND BLOCK COUNTER	D-BS-PKØ8-Ø-17			
	MC REGISTER	D-BS-PKØ8-Ø-18			
	CURR ADDR AND EMA REG	D-BS-RKØ8-Ø-19			
	AC INPUT GATING Ø8-Ø5	D-BS-PKØ8-Ø-2Ø			
	AC INPUT GATING Ø6-11	D-BS-RKØ8-Ø-21			
	AC MB INVERTERS	D-BS-PKØ8-Ø-22			
	+3V CLAMPS	D-BS-PKØ8-Ø-23			
	CABLE TO RKØ1-X	D-BS-RKØ8-Ø-24			
	I/O AND DATA BREAK CABLES	D-BS-PKØ8-Ø-25			
	INDICATOR CABLES	D-BS-RKØ8-Ø-26			
* 1 CONT	RKØ8 HARDWARE LIST	A-AL-RKØ1-Ø-3			
	RKØ8 SOFTWARE PACKAGE	A-SL-RKØ1-Ø-4			
	CHECKOUT PROCEDURE	A-SP-RKØ1-Ø-5			
	DISK CARTRIDGE MEMORY	A-SP-RKØ1-Ø-6			
	ACCEPTANCE PROCEDURE	A-SP-RKØ1-Ø-7			

FIND NO	ELECTRICAL DESCRIPTION	PART NO	DEPT USAGE PROD	CUST	F/C
25.	WIRED ASSY (PKØ8)	D-AD-7006775-Ø-Ø			
	WIRED ASSY (PKØ8) (PL)	A-PL-7006775-Ø-Ø			
28.	RKØ1-X MASTER LIST	A-ML-RKØ1-X			
	MODULE UTILIZATION (PKØ1-X)	K-MU-RKØ1-X-11			
	MODULE UTILIZATION (PKØ1-X) (PL)	K-PL-RKØ1-X-11			
	WIRE LIST (PKØ1-X)	K-WL-PKØ1-X-1Ø			
	FORMAT DELAYS	D-BS-PKØ1-X-Ø1			
	TRACK SEEK	D-BS-RKØ1-X-Ø2			
	DISK AND TRACK ADDRESS	D-BS-PKØ1-X-Ø3			
	COMPARE TRACK ADDRESS	D-BS-PKØ1-X-Ø4			
	DISK SELECTION	D-BS-RKØ1-X-Ø5			
	DISK CABLES	D-BS-PKØ1-X-Ø6			
	+3V LOADS	D-BS-PKØ1-X-Ø7			
	+3V CLAMPS	D-BS-PKØ1-X-Ø8			
	CABLE TO PKØ8	D-IC-PKØ1-X-Ø9			
	BASK FORMAT	D-TD-RKØ1-X-12			
	BLOCK DIAGRAM	D-BD-PKØ1-X-13			
	FLOW	D-FD-RKØ1-X-14			
	TIMING DIAGRAM	D-TD-RKØ1-X-15			
29.	WIRED ASSY (PKØ1-X)	D-AD-7006586-Ø-Ø			
	WIRED ASSY (PKØ1-X) (PL)	A-PL-7006586-Ø-Ø			
32.	854 POWER CONTROL	D-UA-854-Ø-Ø			
	854 POWER CONTROL(PL)	A-PL-854-Ø-Ø			
	854 POWER CONTROL (CS)	B-CS-854-Ø-1			
28 CONT	BASIC FORMAT	D-TD-RKØ1 X-12			
	BLOCK DIAGRAM	D-BD-RKØ1-X-13			
	FLOW	D-FD-RKØ1-X-14			
	TIMING DIAGRAM RKØ1/RKØ8	D-TD-RKØ1-X-15			

FIND NO	ELECTRICAL DESCRIPTION	PART NO	DEPT USAGE PROD	CUST	F/C

FIND NO	ELECTRICAL DESCRIPTION	PART NO	DEPT USAGE PROD	CUST	F/C

REVISIONS — REV. — CHANGE NO. — CHK

FIRST USED ON OPTION/MODEL: RKØ1

DO NOT SCALE DRAWING

UNLESS OTHERWISE SPECIFIED
DIMENSION IN INCHES
TOLERANCES
DECIMALS ± .005 — FRACTIONS ± 1/64 — ANGLES ± 0°30'
FINAL SURFACE QUALITY √
REMOVE BURRS AND BREAK SHARP CORNERS

MATERIAL —

FINISH —

QTY.	DESCRIPTION	PART NO.	ITEM NO.

PARTS LIST

DRN. L Cahill	DATE 3/19/70	digital EQUIPMENT CORPORATION MAYNARD, MASSACHUSETTS
CHK'D. F W Marshall	DATE 4/2/70	TITLE: DRAWING INDEX LIST RKØ1
ENG.	DATE	
PROJ. ENG. D Davis	DATE 4-27-70	
PROD. WHamilton	DATE 4-29-70	
NEXT HIGHER ASSY: A-ML-RKØ1-Ø		SIZE D — CODE DDI — NUMBER RKØ1-Ø1 — REV.
SCALE —		
SHEET 3 OF 3		DIST.

DEC FORM NO DRD 100

This drawing and specifications, herein, are the property of Digital Equipment Corporation and shall not be reproduced or copied or used in whole or in part as the basis for the manufacture or sale of items without written permission.

MASTER DRAWING LIST

DWG. NO.	REV. LET.	NO. OF SHEETS	TITLE
C-UA-RKØ1-X-Ø		1	RKØ1-X LOGIC ASSY
A-PL-RKØ1-X-Ø		1	RKØ1-X LOGIC ASSY (PL)
D-DI-RKØ1-Ø-1	C	3	DRAWING INDEX LIST (RKØ1)
D-AD-7006586-0-0		1	WIRED ASSY (RKØ1-X)
A-PL-7006586-0-0		1	WIRED ASSY (RKØ1-X) (PL)
K-MU/PL-RKØ1-X-11	B	15	MODULE UTILIZATION (RKØ1-X) (MU & PL)
		1	
K-WL-RKØ1-X-1Ø	B		WIRE LIST (RKØ1-X)
D-BS-RKØ1-X-Ø1		1	FORMAT DELAYS
D-BS-RKØ1-X-Ø2	A	2	TRACK SEEK
D-BS-RKØ1-X-Ø3	A	1	DISK AND TRACK ADDRESS
D-BS-RKØ1-X-Ø4		1	COMPARE TRACK ADDRESS
D-BS-RKØ1-X-Ø5		1	DISK SELECTION
D-BS-RKØ1-X-Ø6		1	DISK CABLES
D-BS-RKØ1-X-Ø7	A	1	+3V LOADS
D-BS-RKØ1-X-Ø8		1	+3V CLAMPS
D-BS-RKØ1-X-Ø9		1	CABLE TO RKØ8
D-TD-RKØ1-X-12	A	1	BASIC FORMAT
D-BD-RKØ1-X-13		1	BLOCK DIAGRAM
D-FD-RKØ1-X-14		1	FLOW
D-TD-RKØ1-X-15		1	TIMING DIAGRAM
A-AP-RK01-X-16		1	SIGNAL INDEX

REVISIONS			
REV.	DATE	CHG. NO.	APP'D.
A	5/70	RK01-1	W.M.
B	6/70	RK01X-1	J.M.
C	9/70	RK01-5	J.M.
D	9/70	RK01X-2	J.M.

DRN. J.CAHILL DATE 3/24/70
CHK'D. DATE 3/25/70
ENG. DATE 4-10-70
PROJ. ENG. DATE 4-10-70
PROD. DATE 4-10-70
FIRST USED ON A-ML-RKØ1-Ø
SCALE
SHEET 1 OF 1

digital EQUIPMENT CORPORATION MAYNARD, MASSACHUSETTS

TITLE INTERFACE RK01-X

SIZE	CODE	NUMBER	REV.
A	ML	RKØ1-X	D

DIST.

DEC FORM NO. 16-1033
DMA 103

This drawing and specifications, herein, are the property of Digital Equipment Corporation and shall not be reproduced or copied or used in whole or in part as the basis for the manufacture or sale of items without written permission.

MASTER DRAWING LIST

DWG. NO.	REV. LET.	NO. OF SHEETS	TITLE
C-UA-RKØ8-Ø-Ø	B	1	RKØ8 LOGIC ASSY
A-PL-RKØ8-Ø-Ø	B	1	RKØ8 LOGIC ASSY (PL)
D-DI-RKØ1-Ø-1	A	3	DRAWING INDEX LIST (RKØ1)
D-AD-7006775-0-0	C	1	WIRED ASSY (RKØ8)
A-PL-7006775-0-0	C	1	WIRED ASSY (RKØ8) (PL)
K-MU/PL-RKØ8-0-29	B	7	MODULE UTILIZATION (RKØ8-Ø)
		1	
K-WL-RKØ8-Ø-27	B	1	WIRE LIST (RKØ8)
D-BS-RKØ8-Ø-Ø5		2	IOT DECODING
D-BS-RKØ8-Ø-Ø6	A	1	SKIP AND BREAK
D-BS-RKØ8-Ø-Ø7		1	MAINTENANCE REGISTER
D-BS-RKØ8-Ø-Ø8	A	1	MAJOR SEQUENCER
D-BS-RKØ8-Ø-Ø9		1	R/W COMMAND FIND SEL END TRANS
D-BS-RKØ8-Ø-1Ø	B	1	READ
D-BS-RKØ8-Ø-11		1	WRITE
D-BS-RKØ8-Ø-12		1	DATA BUFFER
D-BS-RKØ8-Ø-13		1	DATA SHIFT REGISTER
D-BS-RKØ8-Ø-14	A	2	LOGITNDINAL PARITY
D-BS-RKØ8-Ø-15	A	1	STATJS REGISTER
D-BS-RKØ8-Ø-16		2	SECTOR ADDRESSING
D-BS-RKØ8-Ø-17	A	1	BIT AND BLOCK COUNTER
D-BS-RKØ8-Ø-18		1	WC REGISTER
D-BS-RKØ8-Ø-19		1	CURR ADDR AND EMA REG
D-BS-RKØ8-Ø-2Ø		1	AC INPUT GATING ØØ-Ø5
D-BS-RKØ8-Ø-21		1	AC INPUT GATING Ø6-11
D-BS-RKØ8-Ø-22		1	AC MB INVERTERS
D-BS-RKØ8-Ø-23		1	+3V CLAMPS
D-BS-RKØ8-Ø-24		1	CABLE TO RKØ1-X
D-BS-RKØ8-Ø-25		1	I/O AND DATA BREAK CABLES
D-BS-RKØ8-Ø-26		1	INDICATOR CABLES

REVISIONS			
REV.	DATE	CHG. NO.	APP'D.
A	5/70	00001	W.M.
B	6/70	00004	J.M.
C	9/70	00005	J.M.
D	10/70	00006	J.M.

DRN. J. CAHILL	DATE 8/20/70	digital EQUIPMENT CORPORATION MAYNARD, MASSACHUSETTS
CHKD.	DATE	
ENG.	DATE	TITLE: DISK CONTROL RK08
PROJ. ENG.	DATE	
PROD.	DATE	
FIRST USED ON: A-ML-RKØ1-Ø		SIZE: A / CODE: ML / NUMBER: RKØ8-Ø / REV.: D
SCALE		DIST.
SHEET 1 OF 1		

DEC FORM NO. 16 1033
DRA 103

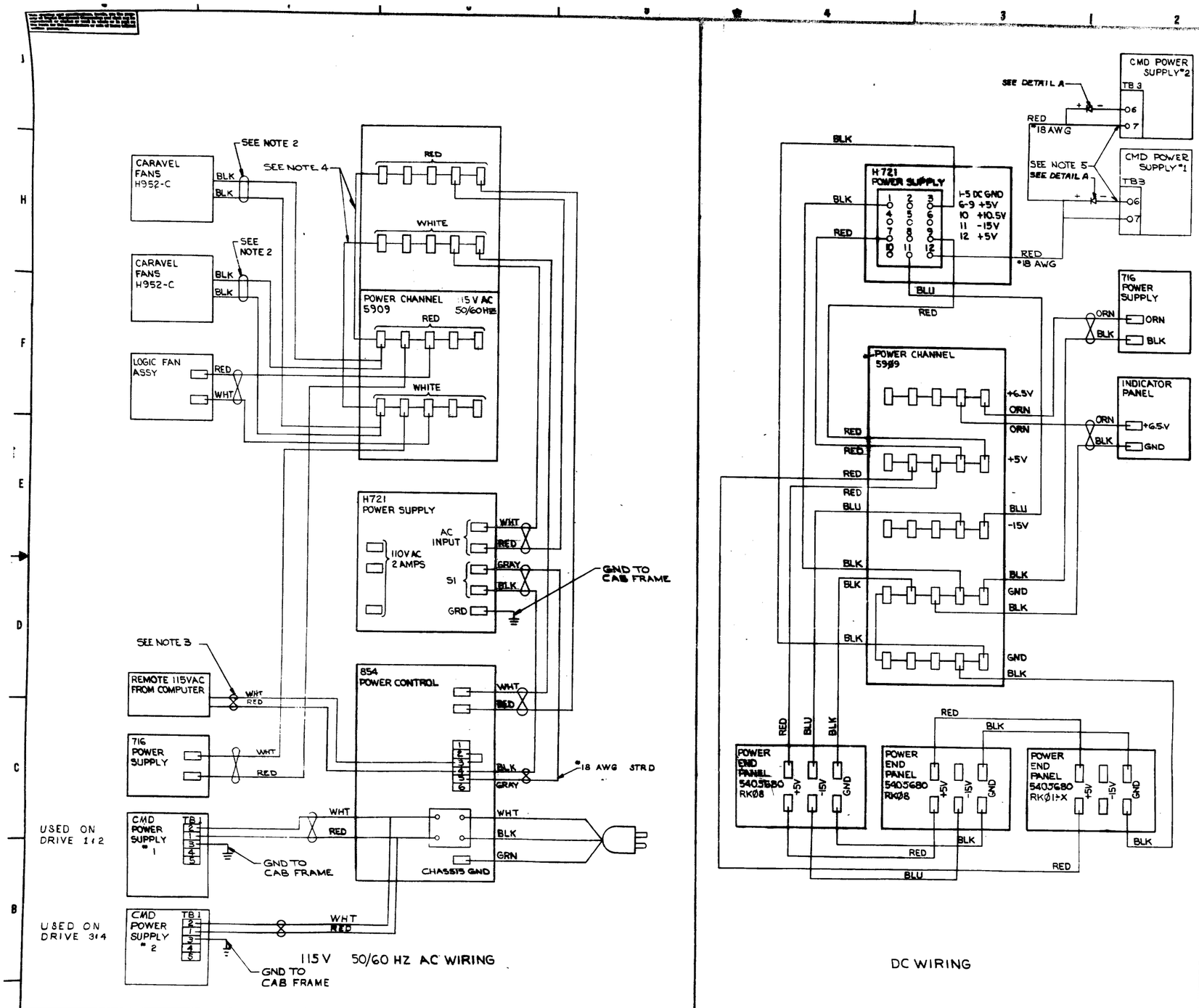

NOTES:

1. UNLESS OTHERWISE SPECIFIED ALL WIRE TO BE #14 AWG STRD, TEF INS.
2. FAN WIRES TO BE WITHIN TUBING SLEEVE.
3. WIRES FROM COMPUTOR MAY BE 10 FT LG RED & WHITE TWISTED PAIR OR A LINE CORD SEE SYSTEM CONFIGURATION
4. DELETE JUMPERS FOR 240/50
5. A) DELETE JUMPER BETWEEN TERMINAL 7 & 8 ON TB3 OF CMD PWR. SUP. FOR DISK DRIVE
   B) MOVE HARNESS WIRE FROM TERMINAL 7 TO TERMINAL 8
   C) ADD D662 DIODE (ITEM 54 ON A-PL-RK01-0-0) BETWEEN TERMINAL 6 & 7 AS SHOWN.
   D) ADD WIRE AS SHOWN (RED #18 AWG) FROM TERMINAL 7 TO TERMINAL 12 OF H721 POWER SUPPLY.
   E) CHECK SOLDER LUG OF TERMINAL 7. IF A WIRE IS SOLDERED TO IT, IT MUST BE REMOVED AND SOLDERED TO THE LUG OF TERMINAL 8.

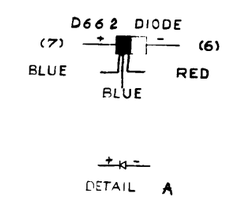

FIRST USED ON OPT/NOD. RK01

AC DC POWER WIRING

SCALE NONE

SHEET 1 OF 2

E IC RK01-0-2 B

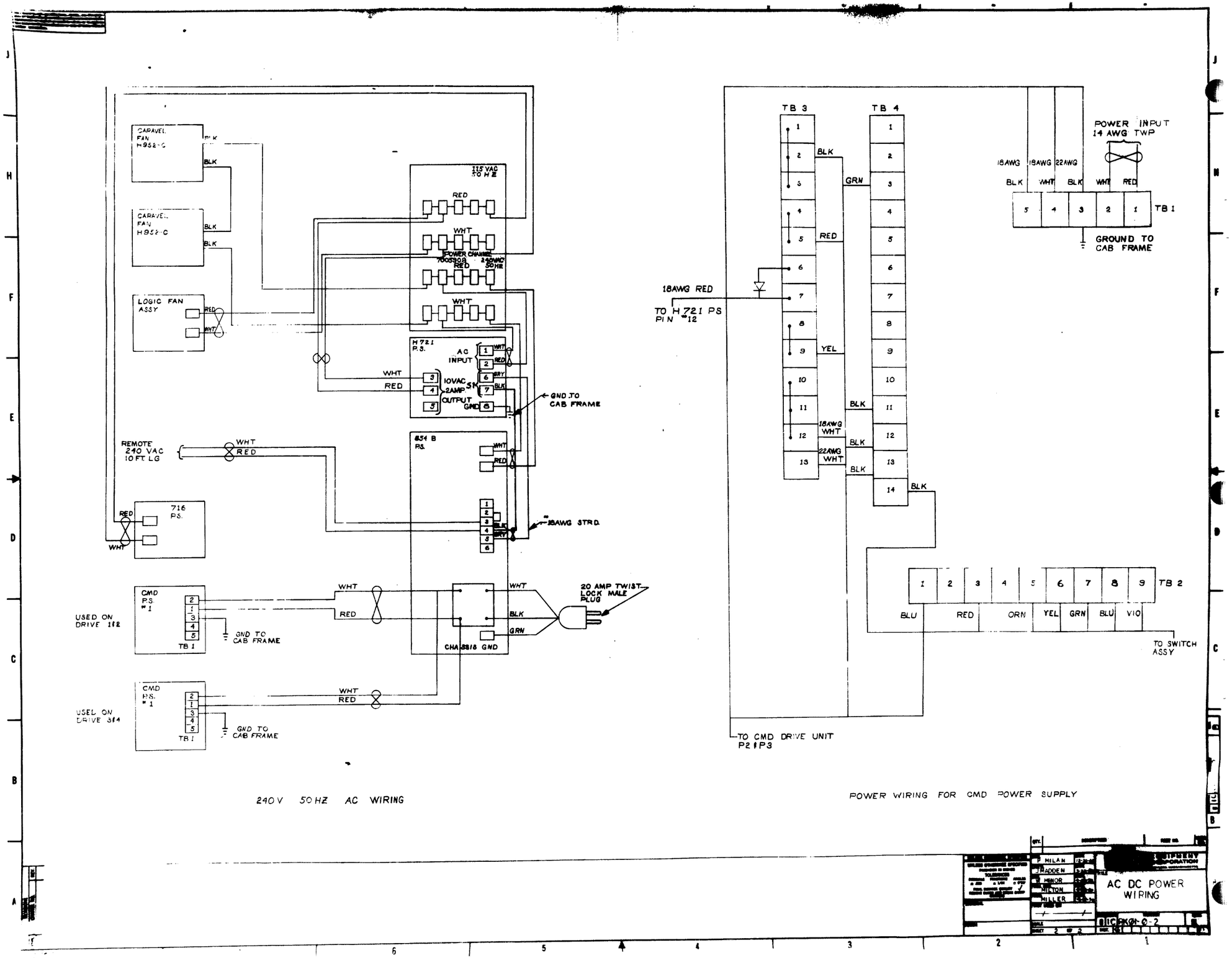
CARAVEL FAN H952-C
CARAVEL FAN H952-C
LOGIC FAN ASSY
115 VAC 50 HZ
POWER CHANNEL 7005908
240VAC 50HZ
H721 P.S.
AC INPUT
10VAC 2AMP OUTPUT
GND TO CAB FRAME
REMOTE 240 VAC 10 FT. LG
854 B P.S.
18AWG STRD.
716 P.S.
CMD P.S. #1
USED ON DRIVE 1&2
USED ON DRIVE 3&4
TB 1
GND TO CAB FRAME
20 AMP TWIST LOCK MALE PLUG
CHASSIS GND
240 V 50 HZ AC WIRING
TB 3
TB 4
18AWG RED
TO H721 PS PIN #12
POWER INPUT 14 AWG TWP
18AWG 18AWG 22AWG
BLK WHT BLK WHT RED
TB 1
GROUND TO CAB FRAME
TB 2
BLU RED ORN YEL GRN BLU VIO
TO SWITCH ASSY
TO CMD DRIVE UNIT P2 & P3
POWER WIRING FOR CMD POWER SUPPLY
P. MILAN
J. MADDEN
W. MINOR
MILTON
MILLER
AC DC POWER WIRING
SHEET 2 OF 2

DIGITAL EQUIPMENT CORPORATION
MAYNARD, MASSACHUSETTS

ACCESSORY LIST

MADE BY	E. Reed	CHECKED	E. Reed	SECTION	
DATE	6-23-70	DATE	6-23-70		
ENG	E. Reed	PROD	B. Miller	ISSUED SECT.	
DATE	6-23-70	DATE	6-23-70		

LEGEND

- D DOCUMENT
- DN DOCUMENT CHANGE NOTICE
- PA PAPER TAPE ASCII
- PB PAPER TAPE BINARY
- PM PAPER TAPE READ-IN-MODE

ITEM NO.	DWG NO./PART NO.	DESCRIPTION	QUANTITY/VARIATION: All Systems	PDP-8 or Linc-8						KIT CHECK BY ____ DATE ____	INSTALLATION CHECK BY ____ DATE ____
1	RKØ1-K	Disk Cartridge (one per drive)	A/R								
2	(no part no.)	Dectape Head cleaning kit, 91% Isopropyl Alcohol	1								
3	(no part no.)	15-foot ground strap with sleeving	1								
4	BCØ8B/D-8	10-foot I/O cables (or length specified by customer)	5								
5	70-05820-4	9-foot I/O cable (Extended Memory systems)		1							
6	H952-A	Side panels	A/R	2							
7	74-06748	Front filler bar	A/R								
8	74-06749	Rear filler bar	A/R								
9	90-06374	1/4-20 X 1" socket head cap screw	A/R								
10	90-07880	1/4-20 Kep nut	A/R								
11	53-08754-2	Drive Ø Decal	A/R								
12	53-08754-4	Drive 1 Decal	A/R								
13	53-08754-6	Drive 2 Decal	A/R								
14	53-08754-8	Drive 3 Decal	A/R								

TITLE	ASSY. NO.	SIZE	CODE	NUMBER	REV.	ECO NO
RK8 Hardware	SHEET 1 OF 1	A	AL	RKØ1-Ø-3		
		DIST.				

DEC FORM NO.
DRA 12[1]

DIGITAL EQUIPMENT CORPORATION
MAYNARD, MASSACHUSETTS

SOFTWARE LIST

MADE BY	E. Reed	CHECKED	E. Reed	SECTION	
DATE	6-12-70	DATE	6-12-70		
ENG	E. Reed	PROD	B. Miller	ISSUED SECT.	
DATE	6-12-70	DATE	6-12-70		

LEGEND

D DOCUMENT
DN DOCUMENT CHANGE NOTICE
PA PAPER TAPE ASCII
PB PAPER TAPE BINARY
PM PAPER TAPE READ-IN-MODE

ITEM NO.	DWG NO./PART NO.	DESCRIPTION	QUANTITY/VARIATION: All Systems	KIT CHECK BY ____ DATE ____	INSTALLATION CHECK BY ____ DATE ____
		"Technical Documents"			
1	A-ML-RKØ1-X	RKØ1-X print set	1		
2	A-ML-RKØ8-Ø	RKØ8 print set	1		
3	DEC-P8-HRDA-D	RK8 Maintenance Manual	1		
4	(no number)	CMD Disk Drive Manual	1		
		"Diagnostics"			
5	Maindec-08-D5HA-PB	RKØ8 Disk Data Reliability - Binary tape	1		
6	Mainded-08-D5HA-D	RKØ8 Disk Data Reliability - Write-up	1		
7	Maindec-08-D5JA-PB	RKØ8 Instruction Test - Binary tape	1		
8	Maindec-08-D5JA-D	RKØ8 Instruction Test - Write-up	1		
9	Maindec-08-D5KA-PB	RKØ8 Disk Formatter - Binary tape	1		
10	Maindec-08-D5KA-D	RKØ8 Disk Formatter - Write-up	1		

TITLE	ASSY. NO.	SIZE	CODE	NUMBER	REV.	ECO NO
RK8 Software Package	SHEET 1 OF 3	A	SL	RKØ1-Ø-4		
		DIST.				

DEC FORM NO.
DRA 120

DIGITAL EQUIPMENT CORPORATION
MAYNARD, MASSACHUSETTS

SOFTWARE LIST

MADE BY DATE	CHECKED DATE	SECTION
ENG DATE	PROD DATE	ISSUED SECT.

LEGEND
- D DOCUMENT
- DN DOCUMENT CHANGE NOTICE
- PA PAPER TAPE ASCII
- PB PAPER TAPE BINARY
- PM PAPER TAPE READ-IN-MODE

ITEM NO.	DWG NO./PART NO.	DESCRIPTION	QUANTITY/VARIATION: PDP-8,8I,8L	Linc-8,PDP-12	KIT CHECK BY ____ DATE ____	INSTALLATION CHECK BY ____ DATE ____
		"Systems Programs"				
11	DEC-08-LBAA-RIM	Binary Loader - RIM tape	1	1		
12	DEC-08-LBAA-D	Binary Loader - Write-up	1	1		
13	DEC-P8-MSDA-PB	PS/8 RK8 System - Binary tape	1	0		
14	DEC-P8-SWXA-PB	PS/8 Command Decoder - "	1	0		
15	DEC-P8-PWXA-PB	PS/8 PIP - "	1	0		
16	DEC-P8-ESAA-PB	PS/8 Editor - "	1	0		
17	DEC-P8-ASXA-PB	PAL-8 Assembler - "	1	0		
18	DEC-P8-KFXA-PB	PS/8 Fortran Compiler - "	1	0		
19	DEC-P8-ARXA-PB	PS/8 SABR Assembler - "	1	0		
20	DEC-P8-LLXA-PB	PS/8 Linking Loader - "	1	0		
21	DEC-P8-SFXA-PB	PS/8 Fortran Library - "	1	0		
22	DEC-P8-SYXA-PB	PS/8 Fortran Library Setup Program - "	1	0		
23	DEC-P8-SUTA-PB	PS/8 Dectape Convert - Binary tape	1	0		
24	DEC-12-SE2D-UO	LAP-6 DIAL Mass Storage - Linc Tape	0	1		
25	DEC-12-SE2D-D	LAP-6 DIAL Manual - Write-up	0	1		

TITLE	ASSY. NO.	SIZE	CODE	NUMBER	REV.	ECO NO
RK8 Software Package	SHEET 2 OF 3	A	SL	RKØ1-Ø-4		
		DIST.				

DEC FORM NO.
DRA 120

DIGITAL EQUIPMENT CORPORATION
MAYNARD, MASSACHUSETTS

SOFTWARE LIST

MADE BY DATE	CHECKED DATE	SECTION
ENG DATE	PROD DATE	ISSUED SECT.

LEGEND

- D DOCUMENT
- DN DOCUMENT CHANGE NOTICE
- PA PAPER TAPE ASCII
- PB PAPER TAPE BINARY
- PM PAPER TAPE READ-IN-MODE

ITEM NO.	DWG NO./PART NO.	DESCRIPTION	QUANTITY/VARIATION: PDP-8,8I,8L	Linc-8,PDP-12	KIT CHECK BY ____ DATE ____	INSTALLATION CHECK BY ____ DATE ____
		"Manuals"				
26	DEC-P8-MWZA-D-(D)	PS/8 Library Write-up	1	1		
27	DEC-08-COCO-D	ODT Write-up	1	0		
28	DEC-08-ESAB-D	Symbolic Editor	1	0		
29	(no number)	"Programming Languages" - handbook	1	1		

TITLE	ASSY. NO.	SIZE	CODE	NUMBER	REV.	ECO NO
RK8 Software Package	SHEET 3 OF 3	A	SL	RKØ1-Ø-4		
		DIST.				

DEC FORM NO.
DRA 120

This drawing and specifications, herein, are the property of Digital Equipment Corporation and shall not be reproduced or copied or used in whole or in part as the basis for the manufacture or sale of items without written permission.

DIGITAL EQUIPMENT CORPORATION
MAYNARD, MASSACHUSETTS

ENGINEERING SPECIFICATION

DATE 6/10/70

TITLE Check Out Procedure

REVISIONS

REV	DESCRIPTION	CHG NO	ORIG	DATE	APPD BY	DATE

ENG	APPD	SIZE	CODE	NUMBER	REV
Al Czajowski		A	SP	RKØ1-Ø-5	

ENGINEERING SPECIFICATION digital CONTINUATION SHEET

TITLE Check Out Procedure

1-0 Test Configurations

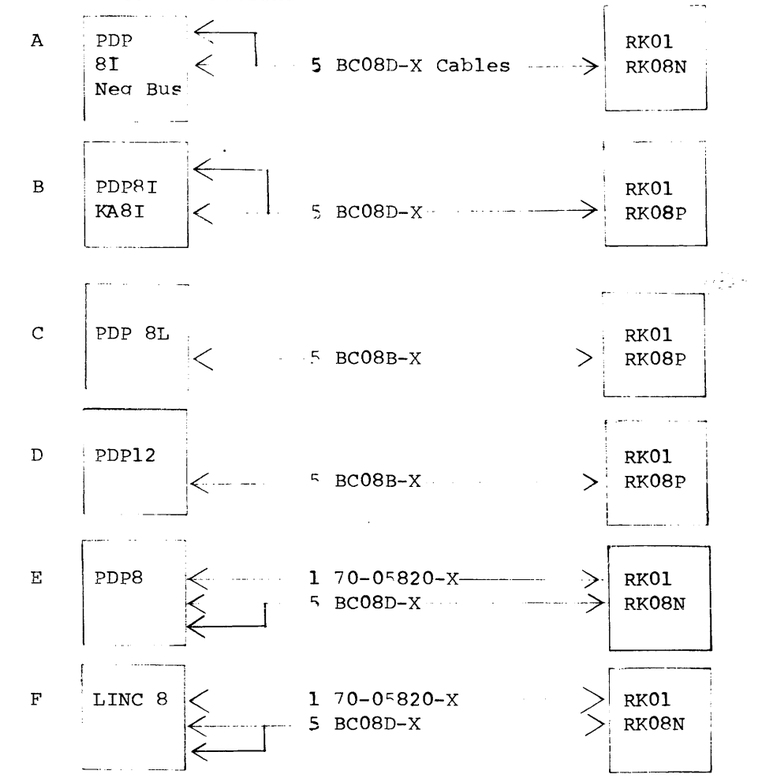

1-1 The above Configurations will be 8 K systems for checkout and Acceptance Test.

1-2 The DM01 or DM04 may be used as long as you stay within the same bus configuration.

example: 8I neg. bus to DM01 to RK08N
8I with KA81 to DM04 to RK08P

1-3 Check all paper work for incoming inspection and Quality Control stamp of approval.

	SIZE	CODE	NUMBER	REV
	A	SP	RKØ1-Ø-5	

2. Cable Table

Test Configurations A and B

```
Computer        RK08

J1)-------------A01
J2)

J3)-------------A02
J4)

J5)-------------A03
J6)

J7)-------------A04
J8)

J9)-------------A05
J10)
```

Test Configuration C

```
Computer        RK08

D36 - A 01
D35 - A 02
D34 - A 03
C36 - A 04
C35 - A 05
```

Test Configuration D

```
Computer        RK08

N14 - A01
N15 - A02
N16 - A03
N17 - A04
N18 - A05
```

Test Configuration E

```
Computer        RK08
```



```
ME34)
MF34)----------A01

ME35)
MF35)----------A02

PE2)
PF2)-----------A03

PE3)
PF3)-----------A04

PE4)
PF4)-----------A05

ME30-----------C05
```

Test Configuration F

```
Computer        RK08            Computer        RK08

ME34)
MF34)----------A01              ME30-------------C05

ME35)
MF35)----------A02

PE2)
PF2)-----------A03

PH4)
PJ4)-----------A04

PH8)
PJ8)-----------A05
```

3. Modules

3.1 Test Configuration A

1 set RK01X
1 set RK08N (see prints)

3.2 Test Configuration B or C or D

1 set RK01X

1 set RK08P (see prints)
1 G717 to be placed in slot A or D 1

3.3 Test Configuration E or F

1 set RK01X
1 set RK08N
1 M938 to be placed in slot A4 or D4) not needed when used
1 M938 to be placed in slot A5 or D5) with DM01

4.0 Check all part list for all items

example: interconnection RK01X to RK08
Cable 3.6" Flexprint W901 - W901 Dec #70-06111-1
Disk Drive Logic cable Purchase part 12-09789
Dec #70-06604 connects to the Drive Loc (CMD
Disk Drive Electronic Module ASM) A15 to the
assigned Disk Drive number in RK01 F29 Disk 0,
F30 Disk 1, F31 Disk 2, and F32 Disk 3.

5. Test Equipment

1 Oscilloscope Tektronix Type 453 or equivalent
2 Probes X10 Tektronix Type P6010 or equivalent
1 Computer
1 RK01 system
1 RK01 - K

Other Equipment that may be helpful but is not needed for this procedure will be found on incoming inspection check-out list. These tools will not be used without approval of the Supervisor of the Test Area, Quality Control and Engineer Support Engineers.

6. Software

RK08 Instruction Test
Maindec -08-D5JA-D

RK08 Disk Formatter
Maindec -08-D5KA-D

RK08 Disk Data Reliability
Maindec -08-D5HA-D

Binary Loader
Dec -08-LBAA

7. Environmental Requirement

Heat Test 1 unit per month per Engineer Spec running Disc Data Acct'd mode for 1 hour at high end. (Note: watch room temp. per Engineering Specification).

8. Vibration Test is per QC specification #1022. Only the module is subject to this Test.

9.0 Testing

9.1 Set up configuration (Note: The RK01 must have a customer and a configuration assigned to it.)

9.2 Check cab fans for proper airflow according to the type of system assigned.

9.3 Check all modules for proper location, solder shorts, etc.

9.4 Check power (110V AC or 240V AC 50/60 hz + 5V + 6.5V -15V Grd and power control, etc.)

9.5 Read operating Procedures of Disk Memory Drive

9.6 Run RK08 Instruction Test. Follow the Program writeup.

9.7 Run RK08 Disk Formatter. Follow the Program writeup.

9.8 Run RK08 Disk Data Reliability Test for at least ¼ hour. Follow the Program writeup. (Note: this test may be started in the Accept mode but if trouble develops use other mode as explained in the writeup).

9.9 Step 9.7 and 9.8 nust be repeated for other format step-ups.

9.10 Repeated 9.8 in the Accept mode for at least ½ hour complete passes on this mode.

9.11 Run the RK08 Disk Data Reliability Test as set forth by the Program writeup for the Acceptance Test with Customers Disk Pac.

9.12 Certified par 9.11 and place all paper work together.

9.13 Sent to Field Service Assceptance a complete unit as per Configuration call for.

10. No system may leave checkout without going through all of the steps untested or partially tested for any reason.

11. The system will be delivery as a self supporting unit ready to be plugged into a computer with all software and accessorys listed on print No. A-AL-RK01-0-3
A-SL-RK01-0-4

This drawing and specifications, herein, are the property of Digital Equipment Corporation and shall not be reproduced or copied or used in whole or in part as the basis for the manufacture or sale of items without written permission.

DIGITAL EQUIPMENT CORPORATION
MAYNARD, MASSACHUSETTS

ENGINEERING SPECIFICATION DATE 6-23-70

TITLE DISK CARTRIDGE MEMORY - RK08/RK01

REVISIONS

REV	DESCRIPTION	CHG NO	ORIG	DATE	APPD BY	DATE

ENG	APPD	SIZE	CODE	NUMBER	REV
Jim Milton		A	SP	RK01-0-6	

DEC FORM NO
DRA 97

SHEET 1 OF 27

digital CONTINUATION SHEET

TITLE Disk Cartridge Memory - RK08/RK01

Introduction

The RK8 system is a removable disk cartridge storage system for the PDP-8 family of computers (excepting the PDP-8/S. Up to four drives can be added to the system in 831,488 word increments for a total capacity of 3,325,952 words.

The main control, called the RK08, receives commands and data from the computer and accesses the RK01 disk drive through a smaller controller called the RK01-X. The RK01-X controller contains the logic peculiar to the RK01 disk drive. A system made from these three basic components is called the RK8.

The disk cartridge is mounted on the drive and rotated at 1500 RPM. Information is read or written on the top or bottom surface of the rotating disk by two read/write heads. These heads are mounted on a carriage moved by a stepping motor and "fly" over the disk surface on a very thin film of air. The stepping motor can position the heads to any one of 203 tracks on the disk. Circumferential position is referenced to slots cut in a

SIZE	CODE	NUMBER	REV
A	SP	RK01-0-6	

DEC FORM NO
DRA 109A

SHEET 2 OF 27

flange on the lower side of the cartridge. These nine slots are sensed by a photo diode and indicate the start of one of eight sectors. A ninth slot gives the information necessary to determine sector 0.

The cartridge is a single aluminum platter coated on both sides with magnetic oxide. It is permanently mounted inside a protective case that automatically opens when inserted in the disk drive. A magnetic material in the drive spindle assembly engages the bottom of the cartridge to couple the platter to the drive motor.

Specifications

Storage Capacity		Each RK01-K Cartridge stores 831,488 12 bit words.
Expansion		Four RK01 drives may be controlled by one RK08 control for 3,325,952 words total.
Transfer Path		Single cycle Data Break
Transfer Rate		16.7 us per word
Minimum Access Time		2.0 ms step plus 37 ms settle time.
(adjacent tracks)		
Average Access		133 ms including settle time.
Maximum Access		400 ms including settle time.
Latency Maximum		(1 revolution) 40 ms
Latency Average		(½ revolution) 20 ms
Program Interrupt		Transfer Done Flag Error Flag
Write Lock		Individual sectors or an entire drive can be write protected.
Data Tracks	200	Plus 3 spare
Words per Track	4096	(2048 on each of two surfaces)
Sectors	16	

Words per Sector	256
Minimum Block Size	256
Maximum Block Size	4096
Recording Method	Double Frequency-Time Plus Data
Density	704 bits/inch (outer track) 1026 bits/inch (inner track)
Speed	1500 rpm
Environmental Requirements:	(a) Operating temperature (environment) +65°F to +90°F. 20°F per hour cycle rate. (b) Storage temperature (environment) +20°F to +165°F for a period of 6 months when packed for storage and shipment. (c) Operating humidity (environment) 20% to 80%, excluding all conditions which would cause moisture to condense in or on the equipment. (d) Storage and shipping humidity range; minimum 5%, maximum 95% up to 100°F. no condensation resulting in moisture on or in the equipment will be tolerable.

Heat Dissipation	RK08 - 150 watts total RK01 - 700 watts, 1000 watt surge per drive.
AC Power Requirements	115 ± 10 VAC, 60 Hertz ± ½ Hertz.
	(a) MTBF equal to or greater than 1000 hours of power on time (a failure is any function requiring unscheduled maintenance.)
	(b) Scheduled preventative maintenance - about 0.5 hrs. per 200 hours on time.
	(c) Recoverable Error Rate - one error per 10^{10} bits transferred (a recoverable error is defined as an error which disappears within 5 attempts to complete the operation.)
	(d) Unrecoverable Error Rate - less than one unrecoverable per 10^{12} bits transferred (an unrecoverable error is defined as an error which persists after 5 attempts to complete the operation.

Subsequent restoration of performance may require prescribed cleaning of heads and/or disk.)

(e) Service Life - The device has been designed for a life of 5 years or 24,000 hours, whichever occurs first before factory overhaul or replacement is required.

Cabinets

One cabinet will accomodate the RK08 and one RK01. A second cabinet will house two RK01 units. A third cabinet will house a fourth RK01.

Programming Sequence

Transfers are through single cycle Data Break. A normal programming sequence is as follows:

1. The word count and current address are placed in the word count and current address registers.
2. The command register is then loaded from the Accumulator. Normally, only the unit number, extended memory address, or seek mode would be changed. Status change in interrupt or rewriting of protect and status words would normally not take place.
3. The track, surface, and sector units are loaded from the accumulator and the instruction (read, write, check parity) is executed.
4. As desired, interrupts will occur when the instruction is complete or when there is an error. Errors will halt transfers.

Format Description

General

Each new cartridge is considered to be barren of useful data. Track and sector information must be written on the cartridge before it can be used by normal programs. The following describes the format of this information.

A cartridge surface is divided into 203 tracks. Each track is further divided into 16 parts called sectors; sectors 0 to 7 are on size zero of the cartridge and sectors 10 to 17 are on side 1 of the cartridge. Each individual sector, which contains enough area to store track and sector information plus 256 data words, can be addressed by the control. If a normal transfer is made starting from sector 0, 4096 data words can be transfered, 2048 words from side zero, and 2048 words from side one.

Transfer of data blocks that total more than the number of sectors from the starting sector to sector 17 is an error as indicated by the track capacity error flag.

Within a sector, the area is subdivided into a 2 word header region and a 256 word data region. The 2 word header contains track and sector information plus other data explained

later. The 256 word data region contains the data words, a 12 bit longitudinal parity and a 12 bit guard word which is nothing more than a convenient area to turn off write amplifiers. Other information written for synchronization etc. is described in the detailed description of the format.

Sector Detail

Each sector is written with an area of data zeroes (a preamble region), a data one for a synch bit, two 12 bit plus parity header words, another area of data zeroes (preamble before data) another data one for a synch bit, 256 12 bit data words, one 12 bit longitudinal parity, and a 12 bit postamble word. During a read, the preamble region allows circuits to synchronize on the time pulses without being disturbed by data ones. The dirst data one read after the preamble region signifies that the region immediately following contains information. Similarily, the preamble region following the header words and prior to the first data bit is used for synchronization on timing pulses. The first data one bit after this region of data zeroes signifies that data immediately follows.

Since the sector is split into the two areas of header and data, normal read or write data instructions can be carried out after reading and checking the two header words. The region between the header words and data is used to switch circuits from read to write when performing a normal write. Therefore during a normal write the two header words are read, checked by the control, the preamble region following is used to switch to write, and the 256 words of data (plus longitudinal parity and postamble word) are written. Note that the two header words are not read into the computer during a normal read or write.

Normal read or normal write instructions can be executed when bit 5 of the command register is zero. When this bit is a one and the sector protect switch is off, both the header words and the data region are avilable to the program as a 258 word data block. This enables a program to "format" the disk by writing the header words and reading them to ensure they were written correctly.

First Header Word - Usage During Normal Read or Write

The first header word is the track surface sector address, identical to the format of the address held in the computer

accumulator when executing a read or write instruction. After being read, this first header word is compared to the track address registers of the control to ensure that the correct track is being accessed. The sector portion of this header word is compared with the sector address requested by program. If they are not equal, the control resets itself until the next sector. If they are equal, the transfer of 256 data words is completed. If another 256 data words are to be transferred (word count not equal to zero), one is added to the sector address requested by program and this new sector is found in the same manner as before.

Note that sectors are identified by data written by a program. Therefore, sector numbers do not have to be sequential but can be interleaved for maximum throughput.

Second Header Word - Usage During Normal Read or Write

The second header word when read during a normal read or write is checked as follows: a) If bit zero is equal to one AND the sector protect switch is on AND a normal write is requested, terminate transfer and raise write lock error flag. If these conditions are not true, continue transfer.

b) If any of bits one to five are a one, during a normal read or write, terminate transfer and set the sector no good flag. These bits are set to a one to indicate that the sector has a permanent flaw and cannot be reliably written or read.

c) Bits 6 to 11 are unused.

Special Note: The previously described functions of checking for correct track address, finding of sector numbers, checking of parity, write lock, sector no good bits, etc. are all performed automatically and require no interventiion by the program when they are carried out.

Sector Sequence

The sequence of sectors accessed during read or write is determined by the formatting program. The simplest format should be used where large blocks of data are being transferred. 4096 words are transferred in 80 ms.

Surface 0 Sector #	Surface 1 Sector #
0	8
1	9
2	10
3	11
4	12
5	13
6	14
7	15

To allow milliseconds of calculations on data between transfers, without requiring one revolution before the next sector appears, the following format should be used:

Surface 0 Sector #	Surface 1 Sector #
0	8
3	11
6	14
1	9
4	12
7	15
2	10
5	13

This allows 10 ms between sectors. 4096 words are transferred in 240 ms. Other formats are possible.

Control Descprition

The control contains an up/down counter called the track address counter which keeps count of the track number. This counter holds the current location of the heads and is the active track register. Another register, the track address register, is loaded under program control from the accumulator. The control will step the up/down counter and the head positioner until the counter and track address register are equal.

After the control finds the correct track, the header of the first sector that appears under the read/write head is read. The track address portion of the header word is compared with the track address register. If they are not equal, the address error flag is raised and operation will be terminated.

Sector selection is performed by loading a register from the accumulator with sector number plus surface. The sector address portion of the header word is compared with the sector address register. If they are equal, a read or write operation continues. If they are not equal, consecutive sectors are read until the correct one is found. If after 56 revolutions the correct sector is not found, the time out error flag is set.

Multidisk Operations

One extra feature has been added to aid the programmer in multidisk operations.

When a drive is first selected during a normal read or write (bit 5 of the command register must be zero) the control will read the track over which the drive heads are positioned. The information which is utilized is the first header word of any sector. This header word contains the track number over which the drive heads are positioned. This track number updates the track address counter and then the instructions, if any issued from the computer, are executed. This operation is necessary, only in multidisk operation and is performed so the program is not forced to calculate a drive's current track location and update the track address counter when switching from drive to drive.

Programming Instructions

Mnemonics	Octal	
DLDC	6732	Load Command Register

Load the Command Register from the AC, clear AC

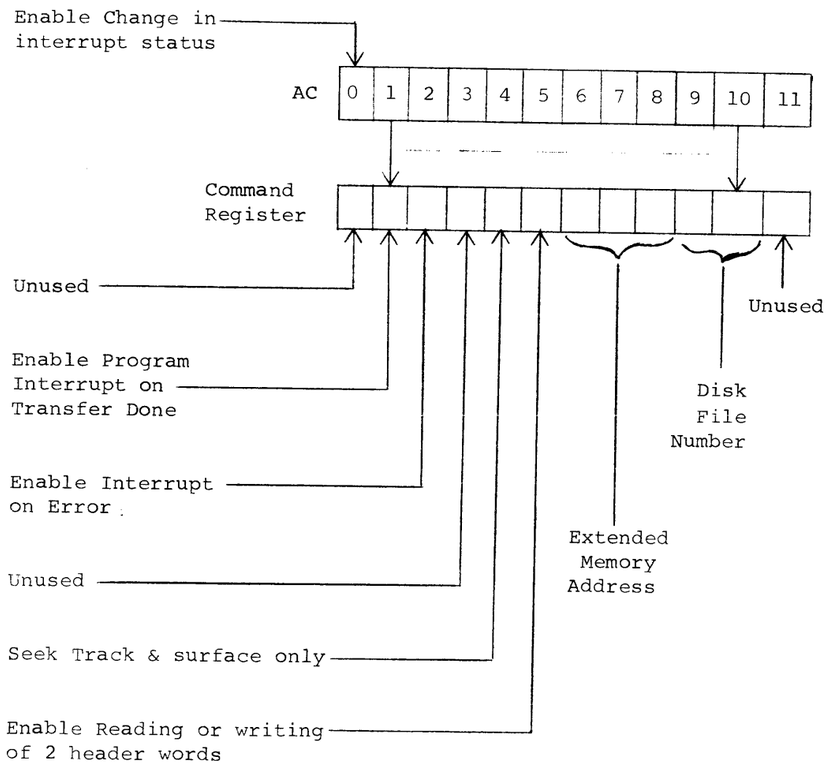

Logical "1" = Function true

Mnemonics	Octal	
*DLDR	6733	Load Disk address and Read

Loads track, surface, and sector address from AC, then clears AC, Starts to Read data from disk if Command Register bit 4=0

*DLDW	6735	Load Disk address and Write

Loads track, surface, and sector address from AC, then clear AC, Starts to write on disk if Command Register bit 4=0.

*DCHP	6737	Load disk address and Check Parity

Loads track, surface, and sector address from AC, then clears AC. Reads data and checks Parity if Command Register bit 4=0.

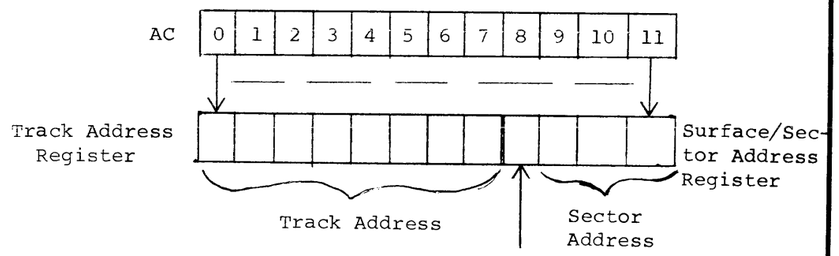

DRDA	6734	Read Disk Address

Clears AC and then reads Track Address Counter, and surface/sector counter into AC.

DRDC	6736	Read Disk Command register

Clears AC then reads Command Register into the AC.

*If command register bit 4=1, instruction will be executed only to seek track and surface. These 3 instructions start all disk operations.

TITLE

Mnemonics Octal

DRDS 6741 Read Disk Status Register

Clears the AC and then reads the Status Register into the AC.

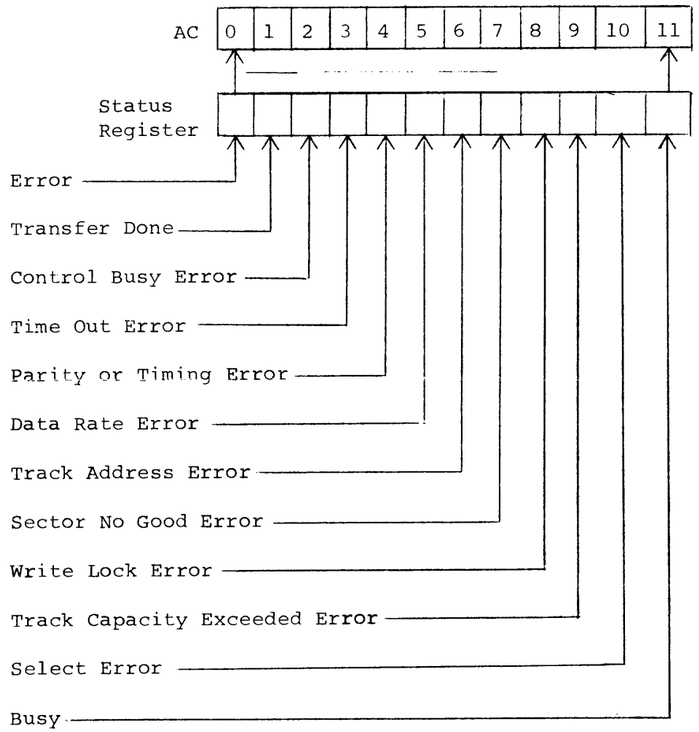

Logical 1 = function true

DCLS 6742 Clear Status Register

TITLE

Mnemonic Octal

DMNT 6743 Load Maintenance Register

Loads Maintenance register from AC, and carries out the operation specified. Bits will remain set until DMNT is issued with AC bits = 0.

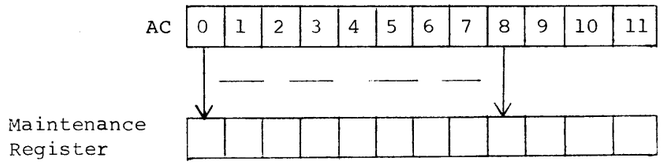

Logical 1 = function true

AC Bit

0 Transfer contents of Track address Register to Track counter Register

1 Transfer Data Register to Serial Register

2 Transfer Serial Register to Data Register

3 Clear AC and Read Data Register into AC

4 Shift a "1" into the Serial Register

5 Shift a "0" into the Serial Register

6 Unformatted Disk

7 Sector Pulse

8 Index Pulse

9-11 Not used

DLDA 6731 Load Disk Address (maintenance only)

Mnemonics	Octal	
DSKD	6745	Skip on transfer Done flag = 1
DSKE	6747	Skip on Error Flag = 1
DCLA	6751	Clear All Clears selected Disk to Track 000. Then clears all control registers and flags except Disk selection. Transfer done set when Disk positioned Track 000.
DRWC	6752	Read Word Count Register Clears AC; then reads the contents of the WC register into the AC.
DLWC	6753	Load Word Count Register Loads WC register from AC, then clears the AC
DLCA	6755	Load Current Address Register Loads CA register from AC; then clears the AC
DRCA	6757	Read Current Address Register Clears the AC; then reads the contents of the CA register into the AC.

Programming Instructions - Detailed Description

DLDC - 6732

The command register is loaded from the AC. The AC is cleared.

AC bit usage is as follows:

AC Bits		
	0	This bit allows changes to the interrupt status if it is a "1". If it is "0", the interrupt status cannot be changed except by DCLA.
	1	If a "1" and bit 0 is a "1", set the enable gate to allow a program interrupt when the Transfer Done flag = "1". If a "0" and bit 0 is a "1", reset the enable gate.
	2	If a "1" and bit 0 is a "1", set the enable gate to allow a program interrupt when the error flag = 1. If a "0" and bit 0 is a "1", reset the enable gate.
	4	If a "1", seek the track specified in track address register, but do not start transfer. If a "0", seek the track, surface, sector and start the transfer.

5	If a "1", the header is accessible to the programmer.
Read	The two header words plus data are read. The maximum number of words read is 258. The work count register determines the minimum number of words.
Write	The two header words plus data are written. The protect switch must be off. When the header words are changed data in that sector must also be rewritten. Maximum/minimum number of words is the same as in read. Since the protection bit is rewritten, formatting is also the method used to "sector protect" an area of the disk. Therefore, the program used to protect areas of the disk must be capable of formatting the disk and checking that the sector(s) of the disk does not have irregularities that will cause read errors.
6	Extended memory address 0.
7	Extended memory address 1.
8	Extended memory address 2.
9 & 10	00 = Disk 0 01 = Disk 1 10 = Disk 2 11 = Disk 3
11	Reserved for future twice density disks 0 = lower tracks, 1 = upper tracks.

DLDR or DLDW or DCHP		Load track address, surface and sector address from accumulator. The control will execute the command register instructions. If track seek only has been selected, the Transfer Done flag will be set when the correct track is reached. The Transfer Done flag will also be set when transfer is complete.
DLDR - 6733	Read	After the correct track, surface and sector number is found, (see write below) the control will read the second header word. Bit zero of this word is ignored. If any of bits 9-11 are set, the Sector No Good flag is set, and the read operation is terminated.
DLDW - 6735	Write	The first word of the header is the track, surface and sector address. It is read by the control and compared with the selected address. If the track addresses differ, the Address Error flag is set and the write operation is terminated. If the two addresses are the same, the sector addresses are checked. If they are the same, the second header word is checked. If the sector addresses are not the same the next sector header is read. This continues until the correct sector is found. If bit zero of the second header word is a "1", and the sector protect switch is on, the sector is protected and the write lock error flag will be set and the transfer terminated immediately. If the bit is a "0" the rest of the header word is checked.

If one of bits 1-5 of the second header word is a "1", the sector has a permanent error and the Sector No Good flag will be set. The writing operation will be terminated. Bits 6-11 are unused.

	6737	The specified sector of the disk is read for correct parity. The parity error flag will be set if there is an error, transfer will be terminated, the transfer done flag will be set.
DRDA	6734	Clear accumulator and read track, surface and sector counter into the accumulator. This is a dynamic register and is changing if a new track or surface has been selected. The sector counter changes every 5 milli-seconds. The program must read these counters twice and verify that the information is correct.
DCRCD	6736	Clear accumulator and read command register into accumulator.
DRDS	6741	Clear accumulator and read status register into accumulator.

AC Bits

0	Error This flag is set when any error flags are set. Control operation ceases whenever the error flag is set, the transfer done flag is set to "1" and the busy flag to "0".
1	Transfer Done - set whenever a control operation is terminated.

2	Control Busy Error - Disk IOT issued when control busy which would effect operation.
3	Time Out Error - The control did not complete and operation after 2 seconds.
4	Parity Error or Timing Bit Error. A bit in data, parity or timing has been picked up or dropped on read. The word count, current address information can be used to identify the error.
5	Data Rate Error - The processor was busy and did not respond to a data break request within the 13 microseconds required.
6	Track Address Error - Track, surface or sector address read from the disk did not agree with the address count registers.
7	Sector No Good - The program attempted to read or write data on a sector whose header words indicated a bad sector.
8	Write Lock Error - The program attempted to write a section that was write protected.
9	Track Capacity Exceeded Error - The program attempted to read or write beyond sector 15.
10	Select Error - Non existant drive error position error or drive. Not ready error.

	11	Busy = 1 - This flag is in the one state when the control is busy. When it goes to the zero state, the transfer done flag will be set.
DMNT	6743	AC bit 0-5, 7-8 are self-explanatory.
	Bit 6	Writes a block of memory specified by word count and current address without formats. Writing starts immediately after the sector mark and continues until the word count overflows. Two extra words are written at the beginning of the block of information. These words are the contents of the data register prior to initiating write. A read operation reads all data after a sector mark until the word count overflows. This ability to read or write any format gives some degree of interchangeability between drives using different format. With bit 6 = 1, the format written is generated by program. Any format can be read and decoded if one knows the format that was read.

DLDA, DCLS, DCLA, DSKD, DSKT, DSKB, DRWE, DLWC, DLCA, DRCA

are self-explanatory.

This drawing and specifications, herein, are the property of Digital Equipment Corporation and shall not be reproduced or copied or used in whole or in part as the basis for the manufacture or sale of items without written permission.

DIGITAL EQUIPMENT CORPORATION
MAYNARD, MASSACHUSETTS

ENGINEERING SPECIFICATION

DATE

TITLE RK08 Acceptance Procedure

REVISIONS

REV	DESCRIPTION	CHG NO	ORIG	DATE	APPD BY	DATE

ENG	APPD	SIZE	CODE	NUMBER	REV
Fran Souva		A	SP-	RKØ1-Ø-7	

DEC FORM NO.
DRA 107

digital CONTINUATION SHEET

TITLE RKØ8 Acceptance Procedure

1) The disk must have passed 12 continuous hours of the acceptance mode of the data reliability diagnostic with not more than one (1) recoverable error on each pass of the test. The machine must be accepted on either the computer it is being shipped on or the same type of computer that it will be added on to.

2) Insert the customer disk cartridge and allow 15 minutes warm-up time to allow the environmental temperature between the cartridge and the drive to balance each other.

3) Check the unformatted mode of the RKØ8 with the instruction test. Until this test is available, however, an intermediate test has been written to check this mode of operation. Run this test three times. Each time change the data being written by changing location ØØ25 of memory to the desired data. Run all drives. Change selected drive by changing the desired drive cable to DØ1.

With the unformatted modes on the drive(s), run the following data reliability patterns:

TST	PAT	DLS	SEQ
3	6	3	Ø

4) Check the sector lock-out switch by changing location ØØ51 to 4ØØØ and pressing the sector lock-out switch. An error should occur and the program should halt at location ØØØ1 with bit Ø8 of the status set.

NOTE: Location ØØ51 should be changed back to zero and the unformatted mode program rerun to insure the correct data being in the second header word.

5) Load the formatter program into the computer. Write any desired sector order other than the normal incremental one. Do this to each drive on the system using a different customer cartridge in each drive. Load the data reliability test and call in the test mode of operation. Select all drives and run the following test patterns:

TST	PAT	DLS	SEQ
1	4	2	Ø
6	4	2	1
3	6	3	1

Completion should occur with no errors. Reformat all cartridges with the normal incremental sectors.

6) Load the data reliability test into the computer. Go the the test mode and select all the drives that are on the system then type in

SIZE	CODE	NUMBER	REV
A	SP	RKØ1-Ø-7	

DEC FORM NO
DRA 109A

the following test patterns:

TST	PAT	DLS	SEQ
1	4	2	Ø
6	4	2	1
3	6	3	1
4	3	1	Ø
5	3	1	1
3	9	3	1
3	7	2	1
4	9	2	Ø
5	9	1	Ø
4	9	3	Ø
5	9	1	1
2	8	1	Ø
6	8	1	1
3	5	3	1
3	9	1	Ø
2	3	1	Ø
6	3	1	Ø
5	3	2	1
Ø	1	1	Ø
7	1	1	1
3	7	2	1
Ø	Ø	1	Ø
7	Ø	1	1
3	Ø	Ø	1
3	1	Ø	1
3	3	1	1
3	4	1	1
3	5	2	1
3	6	2	1
3	7	3	1
3	9	3	1

NOTE: Be sure that the patterns are in correctly. A typing error may cause an erroroneous pring out. Three pass complete type outs are necessary for this test to be accepted.

7) This test is to check for a power failure destroying data. Call the "Test" mode of data reliability. Select all the units on the system and run this pattern:

TST	PAT	DLS	SEQ
3	1	1	Ø

When the pass complete type out occurs stop the program and restart the test. Select the test mode again and one of the drives on the system. Call in the following pattern:

TST	PAT	DLS	SEQ
6	1	1	Ø

While this is running, throw the selected drive "start-stop" switch to stop. Ignore the program type out and stop the computer when the drive becomes safe restart the drive by flipping the switch to start. When the drive is up to speed (indicated by the selection switch being on) restart the program and select the same unit and pattern:

TST	PAT	DLS	SEQ
6	1	1	Ø

Test the simulated power failure on each of the remaining drives on the system.

8) Check the write lock-out switches in the following manner. Call up the following test pattern from the test mode of the data reliability diagnostic:

TST	PAT	DLS	SEQ
4	Ø	Ø	Ø

While this is running, hit any lock-out switch that pertains to a drive on the system. An error type out shouldoccur. Inspect the type out to be sure that the drive that failed corresponds with the switch that was hit. Repeat the test on all the drives on the system.

9) There must be complete compatability between all RKØ8 disk drives. Acceptance for this is run by formatting a customer cartridge on a drive not associated with the system being accepted and running the "accept" mode of the data reliability diagnostic for twenty (20) minutes on each drive on the system.

10) The final acceptance test is to run the system software for the type computer that the disk is on; PDP-8, 8I, 8L must run PS-8 software; PDP-12 must run LAP-6 Dial Mass Storage.

11) Special hardware to go with the RKØ8 system: All items listed on A-AL-RKØ1-Ø-3.

12) Software to go with the RKØ8 System and 8K of memory: All items listed on A-SL-RKØ1-Ø-4.