Computervision

IOS Controller

Logic Diagrams

IOS Controller

Logic Diagrams

PROPRIETARY NOTICE

The information and drawings contained herein are the sole property of Computervision Corporation. Use of this document is reserved exclusively for Computervision personnel. Reproduction of this matter in whole or in part is forbidden without the express written consent of Computervision.

©Copyright May 1978
Computervision Corporation
All Rights Reserved
Printed in USA

Order No. 001-00515

COMPUTERVISION CORP

[redacted]-L14X1020 /
PART NUMBER RE

MACHINE USED ON IOS CONTROLLER TITLE ELECTRONIC DOCUMENTATION PKG

ORIGINATOR R. Cheatham 8-29-73 NEXT ASSY MOD. LIST QTY —
DATE

SHEET 1 OF 1 SHEE

CHG	ITEM	PART NUMBER	REV	QTY	TITLE OR DESCRIPTION	MANUFACTURER
	1	L14X1020	-	REF.	ELEC. DOCUMENTATION PKG.	
	2	DS14E1015		1	SYS. INTERCONNECTION DIAG.	
	3	DS14E1007		1	SCHEMATIC DIAGRAM	
	4	AW14E1012		1	ALPHA WIRE LIST	

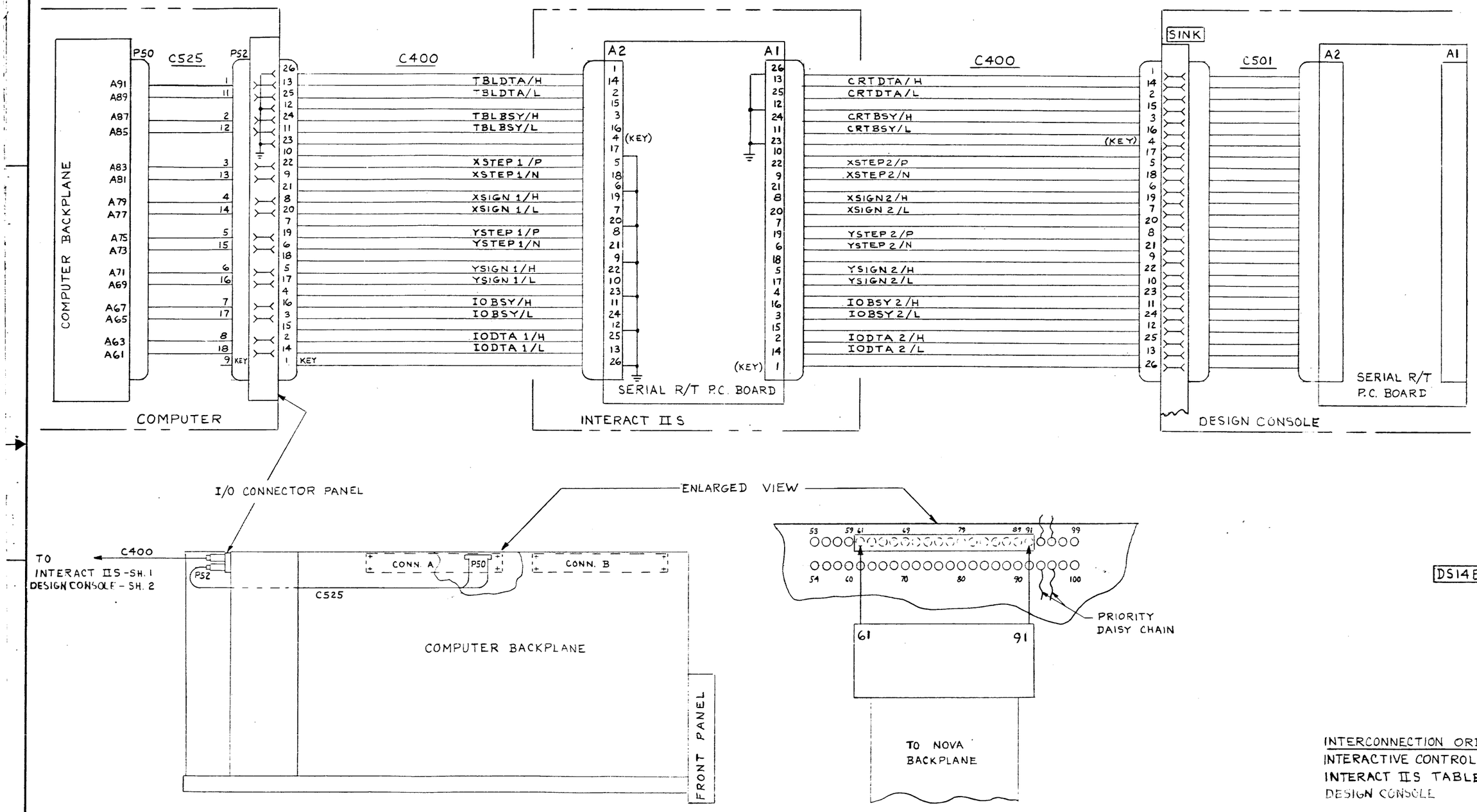

DS14E1015 A

INTERCONNECTION ORDER
INTERACTIVE CONTROLLER
INTERACT IIS TABLE
DESIGN CONSOLE

THIS DRAWING CONTAINS INFORMATION PROPRIETARY TO COMPUTERVISION CORPORATION AND IS NOT TO BE USED OR REPRODUCED WITHOUT PERMISSION OF COMPUTERVISION CORPORATION.

MATERIAL: —//—
FINISH: —//—

PART NUMBER	NEXT ASSEMBLY	QTY
	L14X1020	1

COMPUTERVISION CORP.
SOUTH AVENUE
BURLINGTON, MASS. 01803

TOLERANCES
DECIMAL
.XX = ±.01
.XXX = ±.005
.XXXX = ±.0010
FRACTIONAL = ±1/64
ANGULAR = ±1°00'

DRN R J C
CHK SPINELLI 9-73
ENGR
PROJ
MFG
SIGNATURE DATE
REMOVE ALL BURRS AND SHARP EDGES

SYM	REVISION DESCRIPTION	APPD	DATE
A	REL ECO# 1273	WB	

TITLE SYSTEM INTERCONNECTION IA IIS & DESIGN CONSOLE

SCALE NONE
DWG NO. DS14E1015
UNIT WT.
SHEET 1 OF 2 SHEETS

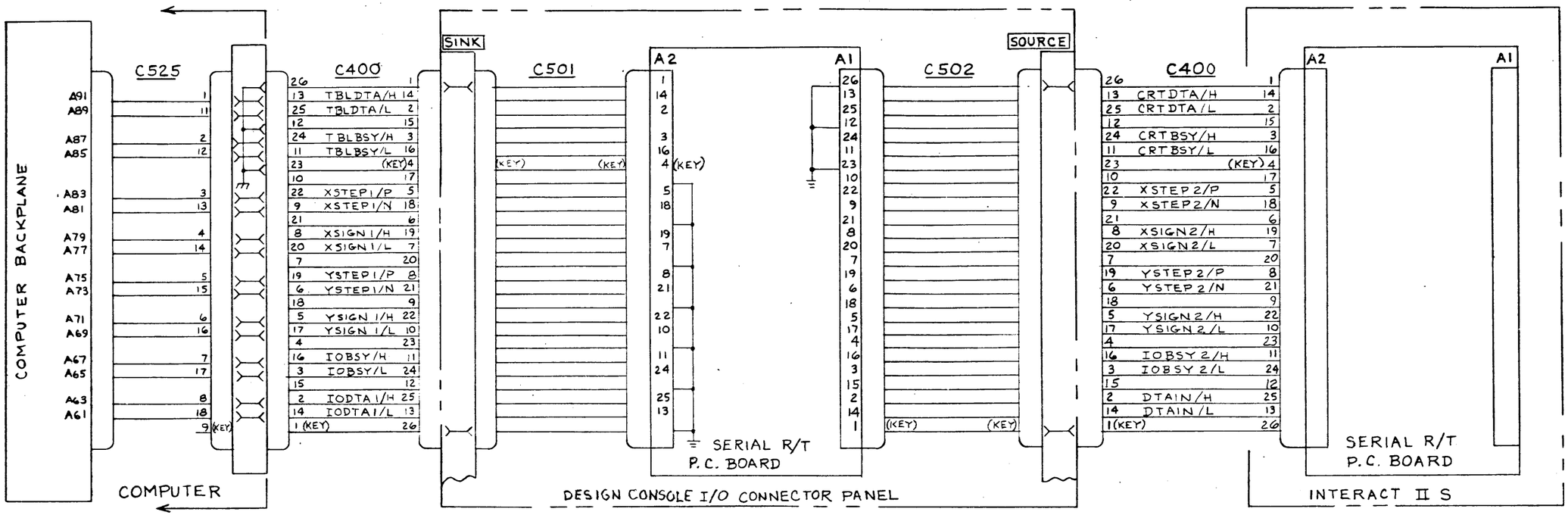

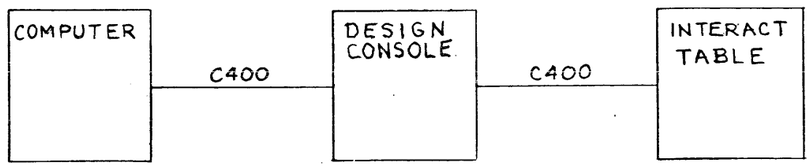

BLOCK DIAGRAM - ABOVE

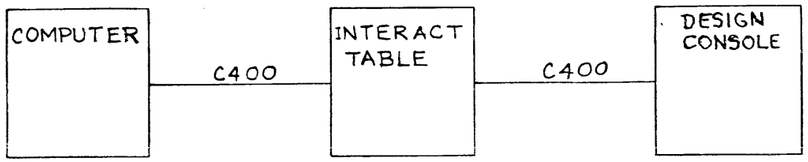

BLOCK DIAGRAM - SEE SHEET 1

DS14E1015
A

INTERCONNECTION ORDER
INTERACTIVE CONTROLLER
DESIGN CONSOLE
INTERACT IIS TABLE

THIS DRAWING CONTAINS INFORMATION PROPRIETARY TO COMPUTERVISION CORPORATION AND IS NOT TO BE USED OR REPRODUCED WITHOUT PERMISSION OF COMPUTERVISION CORPORATION

TOLERANCES
DECIMAL
.XX ± .01
.XXX ± .005
.XXXX ± .0010
FRACTIONAL ± 1/64
ANGULAR ± 1°00'

MATERIAL: —
FINISH: —
PART NUMBER: SEE SHT ONE
NEXT ASSEMBLY
QTY

DRN
CHK
ENGR
PROJ
MFG

SIGNATURE DATE

REMOVE ALL BURRS AND SHARP EDGES

UNIT WT.

SCALE None

SEE SHT 1

SYM	REVISION DESCRIPTION	APPD	DATE

TITLE: SEE INTERCONNECTION IA IIS & DESIGN CONSOLE

DWG NO. DS14E1015

SHEET 2 OF 2 SHEETS

COMPUTERVISION CORP.
SOUTH AVENUE
BURLINGTON, MASS. 01803

PAGE & EDGE CONNECTOR INTERCONNECTION SYMBOLOGY

- SIGNAL GOES TO ANOTHER PAGE
- SIGNAL GOES TO ANOTHER PAGE & IS USED ON PRESENT PAGE
- SIGNAL GOES TO EDGE CONNECTOR
- (XX) SIGNAL ORIGINATED ON PAGE XX
- (XX) SIGNAL ORIGINATED ON PAGE XX & HAS MULTI ENTRY ON THE SAME PAGE
- A-XX SIGNAL ORIGINATED ON EDGE CONNECTOR
- A-XY BIDIRECTIONAL BUS ON EDGE CONNECTOR

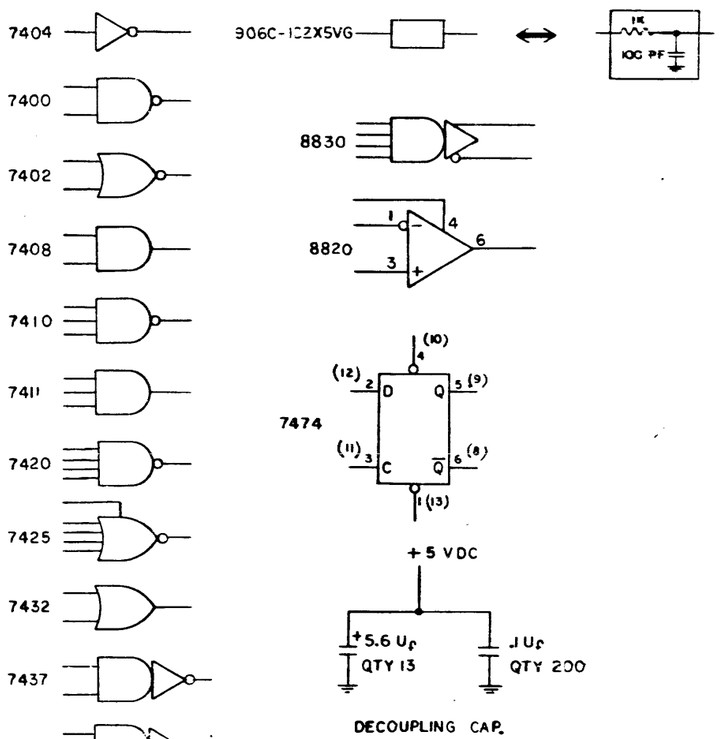

DECOUPLING CAP.

THE COMPONENT DM8599 MAY BE USED AS AN ALTERNATE IN LOCATIONS 7E, 8E, 9E & 10E. (SEE SHEET 11)

INSERT RESISTOR PAK 898-1-R3.3 ONLY WHEN THE COMPONENT AM3IL01 IS USED AS AN ALTERNATE IN LOCATIONS 3D, 4D, 4E, & 4F (SEE SHEET 5)

	12	11	10	9	8	7	6	5	4	3	2	1	
C	74181		74181			74181			74181		7438	7438	C
D	74S74	74LS51	EMPTY	7404	7404	7404	74LS74	74LI64	L656IN	L656IN	7438	7438	D
E	74S00	898 I-R3.3	656IN	656IN	656IN	656IN	74LS74	74LI64	L656IN	7404	7438	7438	E
F	TEMP PLG	74S20	74298	74298	74298	74298	74LS74	74LSI93	L656IN	7404	7438	7438	F
G	PROM PLG	7402	74LS74	PROM-S	PROM-C	PROM-A	9602	74LSI38	74LSI92	7404	7438	7438	G
H	RAM PLG	7408	74LS51	74LSI75	74LSI93	74LSI93	9602	74165	74165	7437	2 LEAD COMP	8820	H
J	RAC PLG	7432	74LS74	74LSI53	74LSI75	2 LEAD COMP	74LS51	74LS08	7408	74LS10	2 LEAD COMP	8830	J
K	74LS08	74S10	74S20	74LSI53	74LSI53	74LS10	7404	74LSI92	7411	7408	8830	899-3R36	K
L	74S20	74S04	74S30	74LS74	74LS74	74LS74	74LS74	74LS74	74LS04	74LS74	8830	899-3R36	L
M	74LSI92	74LSI38	74LSI38	74LS08	74LS00	74LS00	74LS08	74LSI93	74LS74	898-1R33	74LS266	74LS04	M
N	74LSI93	82S52	74LSI93	74LSI38	74LS74	74LS51	74S04	74LSI92	74LSI93	7404	7408	7402	N
P	DVC CODE SWITCH	74LS00	74279	74LS08	74LS86	74LS51	7410	74LS00	74LSI93	7400	102X5VG	7408	P
R	20 MHZ OSC	7404	9334	2 LEAD COMP	9602	74LS51	74LS51	74LS74	74LSI93	7425	102X5VG	7410	R
S	ALGO PLG	7400	7432	74279	7400	7410	7425	74LSI53	74LSI93	7425	74LS74	7410	S
T	2 LEAD COMP	74LS74	7408	74LS00	7411	7404	74279	74LS00	74LSI74	7432	74LS74	7438	T
U	9602	7404	SE555V	2 LEAD COMP	7497	7414	SE555V	74LS74	74LS266	74S20	74LS08	7438	U
W	BRM PLG	7402	74LSI93	74LSI93	7497	74LSI93	PROM P	74LSI92	74LS04	74LS08	74LSI75	74LS51	W
	12	11	10	9	8	7	6	5	4	3	2	1	

B99 — CONN. B — B1 — A99 — CONN. A — A1

DS14E1007 G

NOTES

1. UNLESS OTHERWISE SPECIFIED:
   ALL RESISTORS ARE IN OHM
   K=1000; M=1,000,000; TOL.=±5%
   POWER RATING = 1/8 WATT
2. Vcc (5V SUPPLY AND RTN) TO EACH I.C. AS FOLLOWS:
   14 PIN I.C. PIN 7 = RTN; PIN 14 = SUPPLY
   16 PIN I.C. PIN 8 = RTN; PIN 16 = SUPPLY
   8 PIN I.C. PIN 4 = RTN; PIN 8 = SUPPLY
3. SYMBOL "X" ON OUTPUT PIN INDICATES OPEN COLLECTOR.
4. ALL PARENTHESIZED DESIGNATIONS ENDING IN "U", "M" OR "K"-(10U),(3M) OR (10K)-ARE COMPONENT LOCATORS MARKED ON THE P.C. BOARD AND ARE NOTE TO BE CONFUSED AS COMPONENT VALUES.

EX. (10U) 10 uF (5K) 10K

COMPONENT LAYOUT & LOGIC SYMBOLOGY

THIS DRAWING CONTAINS INFORMATION PROPRIETARY TO COMPUTERVISION CORPORATION AND IS NOT TO BE USED OR REPRODUCED WITHOUT PERMISSION OF COMPUTERVISION CORPORATION.

MATERIAL	PART NUMBER	NEXT ASSEMBLY	QTY
NONE			
FINISH: NONE	EA14E1002	LI4X1020	REF 1

TOLERANCES: DECIMAL .XX ±.01, .XXX ±.005, .XXXX ±.0010; FRACTIONAL ±1/64; ANGULAR ±1°00'

DRN R. Abreo 7/24/74; CHK; ENGR; PROJ; MFG; SIGNATURE DATE; REMOVE ALL BURRS AND SHARP EDGES

COMPUTERVISION CORP. SOUTH AVENUE BURLINGTON, MASS. 01803

SYM	REVISION DESCRIPTION	ENG	APPD	DATE
G	ECO#2905			
F	ECO#2846			
E	ECO#2158			
D	ECO#1481			
C	ECO#1406			
B	ECO#1345			
A	REL-ECO#1328			

TITLE: INTERACTIVE CONTROLLER BOARD

SCALE: NONE; DWG NO. DS14E1007; UNIT WT.; SHEET 1 OF 12 SHEETS

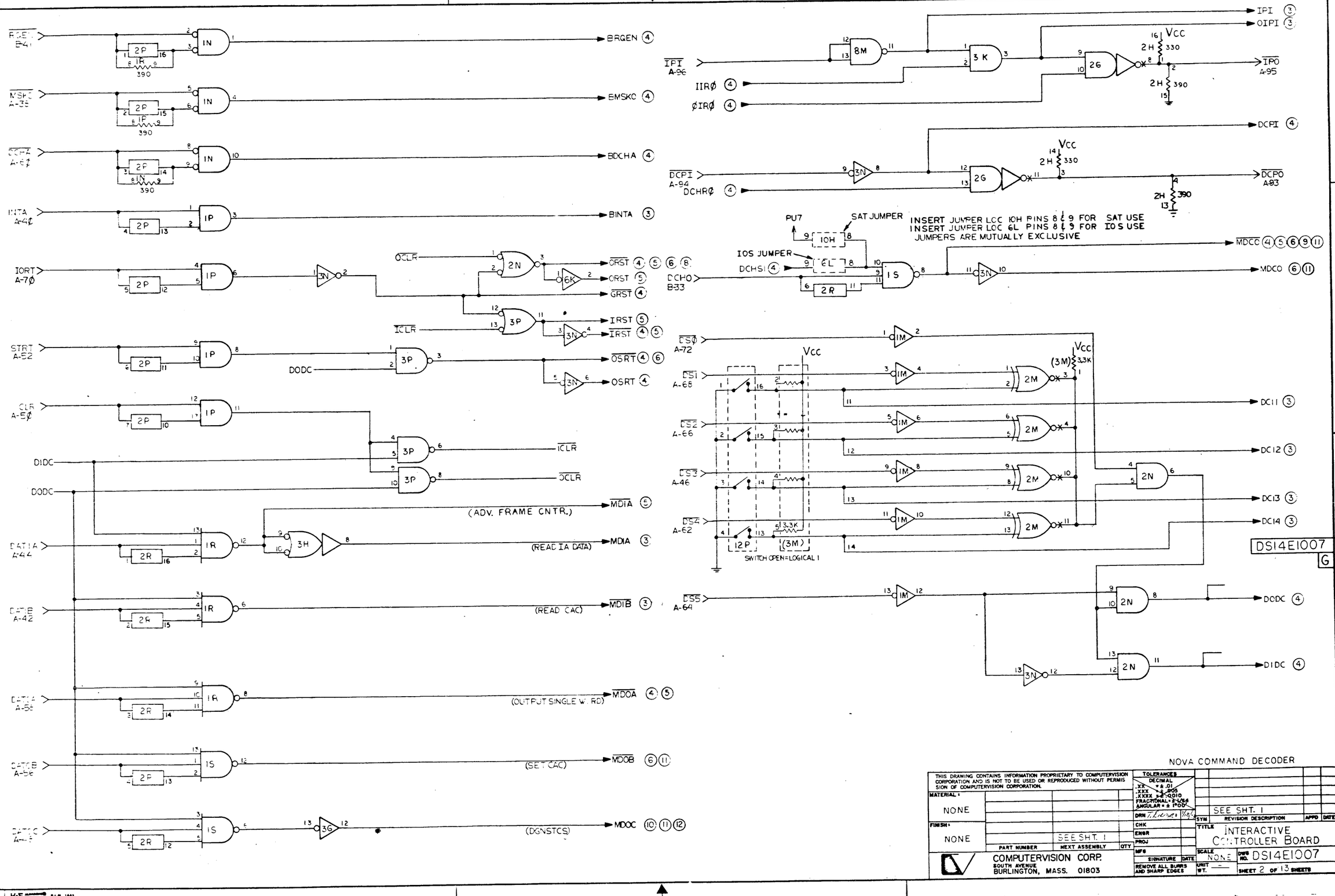

NOVA COMMAND DECODER

THIS DRAWING CONTAINS INFORMATION PROPRIETARY TO COMPUTERVISION CORPORATION AND IS NOT TO BE USED OR REPRODUCED WITHOUT PERMISSION OF COMPUTERVISION CORPORATION.

MATERIAL: NONE

FINISH: NONE

PART NUMBER	NEXT ASSEMBLY	QTY
	SEE SHT. 1	

COMPUTERVISION CORP.
SOUTH AVENUE
BURLINGTON, MASS. 01803

TOLERANCES
DECIMAL
.XX = ± .01
.XXX = ± .005
.XXXX = ± .0010
FRACTIONAL = ± 1/64
ANGULAR = ± 1°00'

DRN T. Lawrence 11/6/73
CHK
ENGR
PROJ
MFG
SIGNATURE DATE
REMOVE ALL BURRS AND SHARP EDGES

SEE SHT. 1

SYM	REVISION DESCRIPTION	APPD	DATE

TITLE INTERACTIVE CONTROLLER BOARD

SCALE NONE
DWG NO. DS14E1007
UNIT WT. —
SHEET 2 OF 13 SHEETS

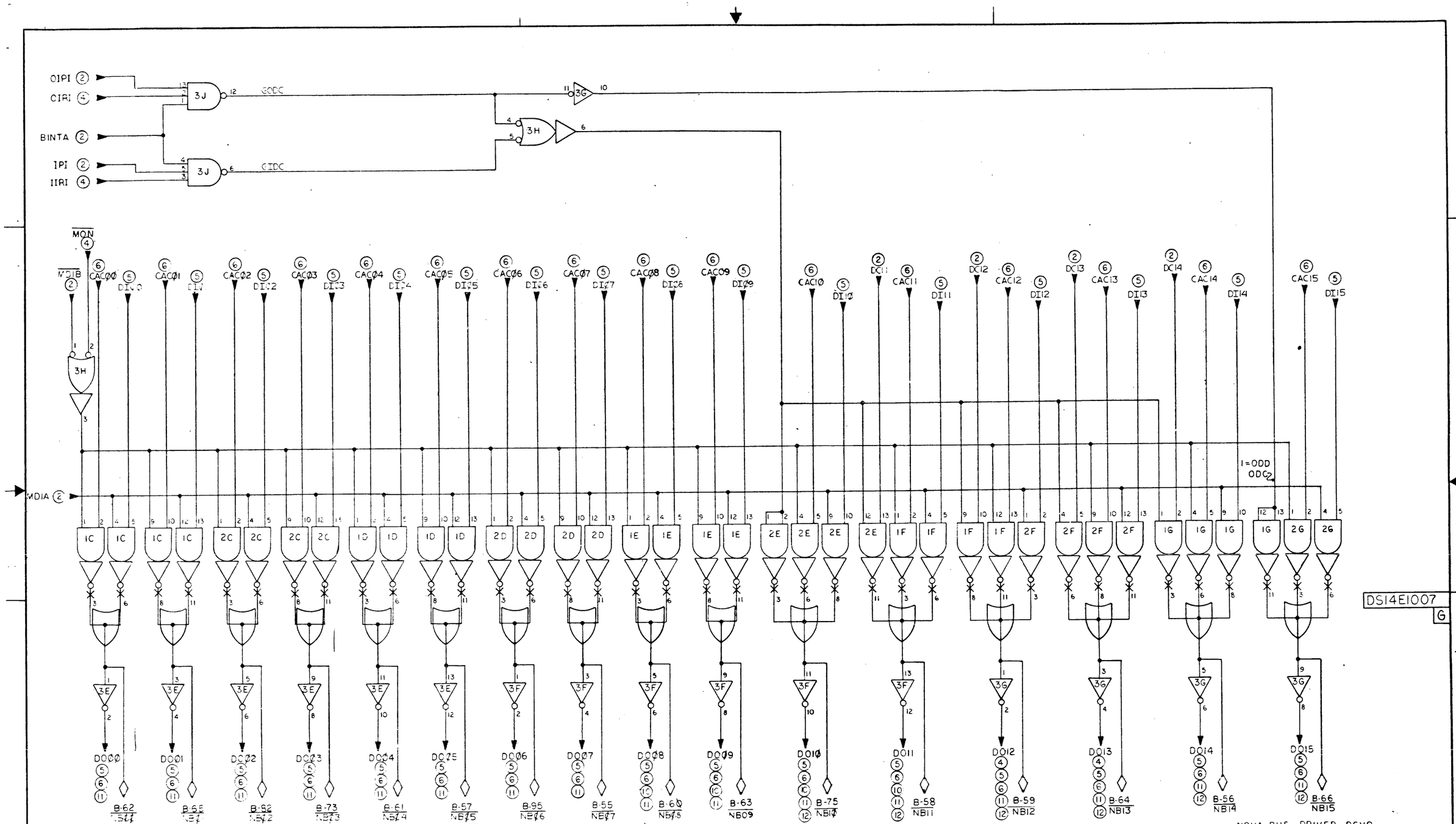

THIS DRAWING CONTAINS INFORMATION PROPRIETARY TO COMPUTERVISION CORPORATION AND IS NOT TO BE USED OR REPRODUCED WITHOUT PERMISSION OF COMPUTERVISION CORPORATION.

MATERIAL: NONE

FINISH: NONE

PART NUMBER	NEXT ASSEMBLY	QTY
	SEE SHT 1	

COMPUTERVISION CORP.
SOUTH AVENUE
BURLINGTON, MASS. 01803

TOLERANCES
DECIMAL
.XX = ± .01
.XXX = ± .005
.XXXX = ± .0010
FRACTIONAL = ± 1/64
ANGULAR = ± 1°00'

DRN T. Ribeiro
CHK
ENGR
PROJ
MFG
SIGNATURE DATE
REMOVE ALL BURRS AND SHARP EDGES

SEE SHT. 1

SYM	REVISION DESCRIPTION	APPD	DATE

TITLE: INTERACTIVE CONTROLLER BOARD

SCALE: NONE
DWG NO. DS14E1007
UNIT WT.
SHEET 3 OF 13 SHEETS

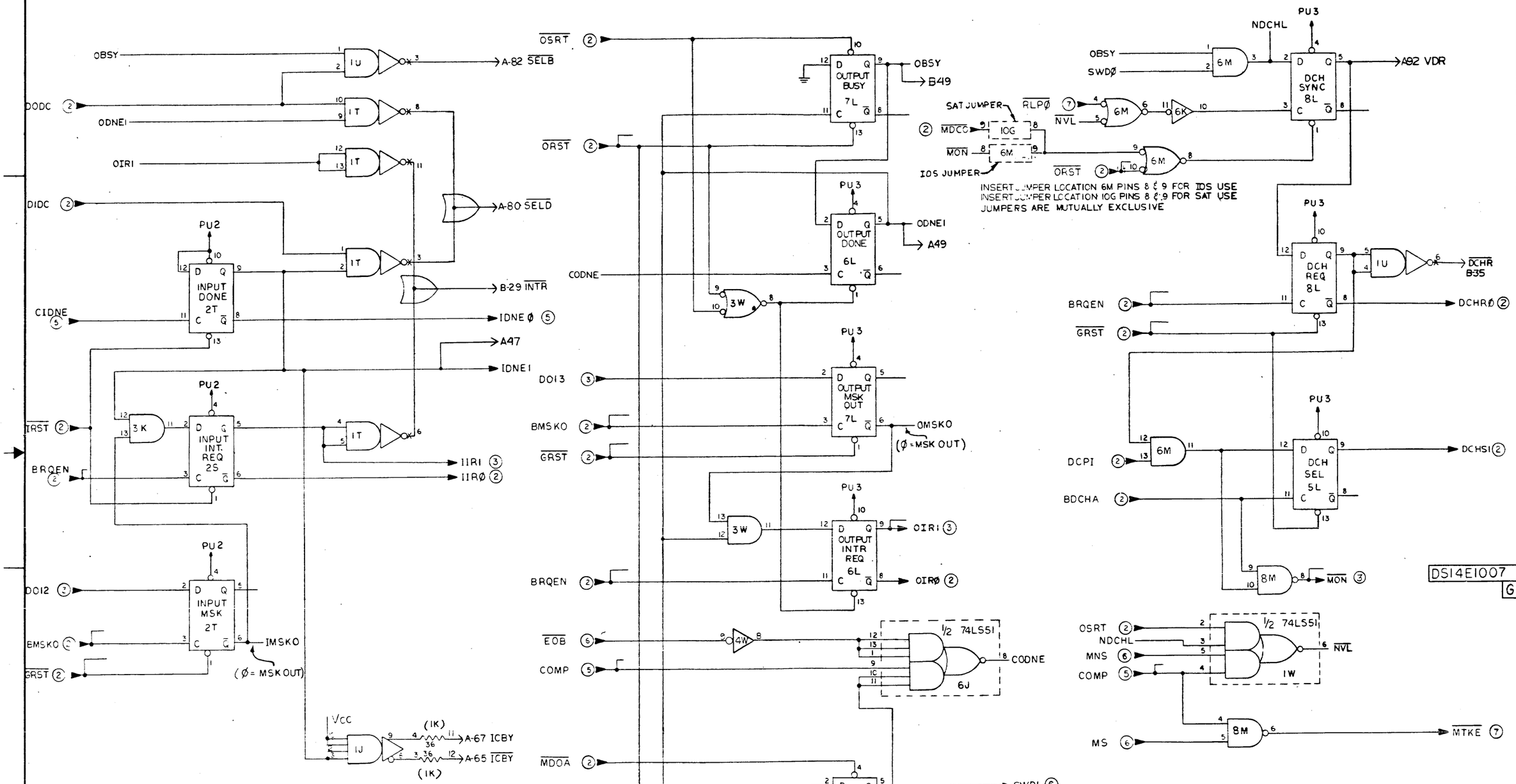

THIS DRAWING CONTAINS INFORMATION PROPRIETARY TO COMPUTERVISION CORPORATION AND IS NOT TO BE USED OR REPRODUCED WITHOUT PERMISSION OF COMPUTERVISION CORPORATION.

MATERIAL: NONE

FINISH: NONE

PART NUMBER	NEXT ASSEMBLY	QTY
	SHT SHT 1	

TOLERANCES
DECIMAL
.XX = ± .01
.XXX = ± .005
.XXXX = ± .0010
FRACTIONAL = ± 1/64
ANGULAR = ± 1°00'

DRN T. Roberts 9/18/73
CHK
ENGR
PROJ
MFG
SIGNATURE DATE
REMOVE ALL BURRS AND SHARP EDGES

SEE SHT. 1

SYM	REVISION DESCRIPTION	APPD	DATE

TITLE: INTERACTIVE CONTROLLER BOARD

SCALE: NONE
DWG NO. DS14E1007
UNIT WT.
SHEET 4 OF 13 SHEETS

COMPUTERVISION CORP.
SOUTH AVENUE
BURLINGTON, MASS. 01803

DS14E1007
G

SERIAL RCVR-TRANSMTR

JUMPER SHOWN
FOR FRAME SIZE=3

SEE NOTE AT LOCATION 5C & 8C ON SHEET 1.

SEE NOTE AT LOCATION 5C & 8C ON SHEET 1

DIØØ TO DI15 (3)

THIS DRAWING CONTAINS INFORMATION PROPRIETARY TO COMPUTERVISION CORPORATION AND IS NOT TO BE USED OR REPRODUCED WITHOUT PERMISSION OF COMPUTERVISION CORPORATION.

MATERIAL *	NONE
FINISH *	NONE
PART NUMBER	SEE SHT 1
NEXT ASSEMBLY	
QTY	
DRN	T. Ribeiro 8/4/
CHK	
ENGR	
PROJ	
MFG	
SIGNATURE	DATE
REMOVE ALL BURRS AND SHARP EDGES	
TOLERANCES	DECIMAL .XX ± .01, .XXX ± .005, .XXXX ± .0010; FRACTIONAL ± 1/64; ANGULAR ± 1°
SYM	REVISION DESCRIPTION — APPD — DATE
	SEE SHT. 1

COMPUTERVISION CORP.
SOUTH AVENUE
BURLINGTON, MASS. 01803

TITLE: INTERACTIVE CONTROLLER BOARD

SCALE: NONE — DWG NO. DS14E1007 — SHEET 5 OF 13 SHEETS — UNIT WT. —

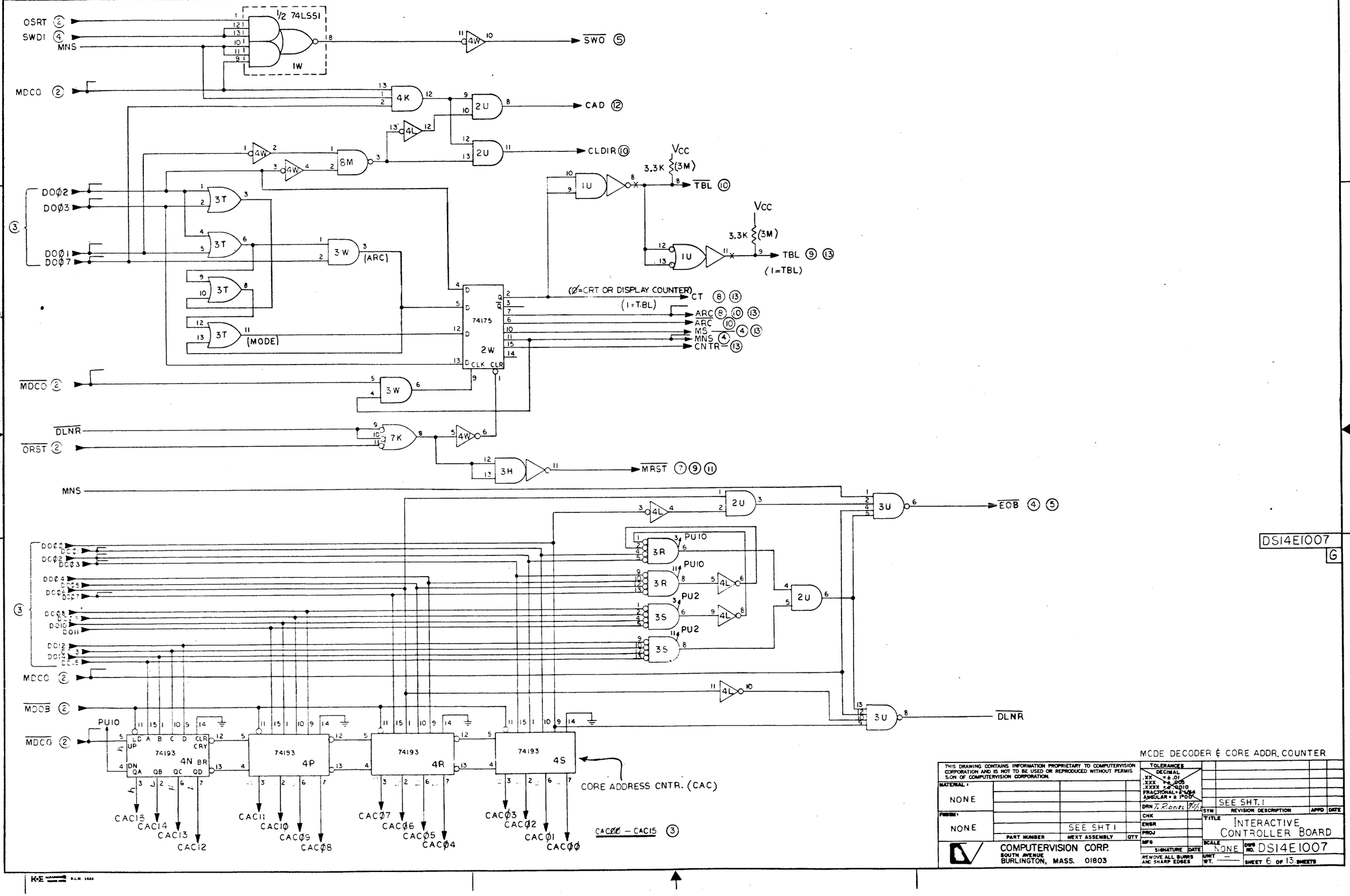

DS14E1007
G

MODE DECODER & CORE ADDR. COUNTER

THIS DRAWING CONTAINS INFORMATION PROPRIETARY TO COMPUTERVISION CORPORATION AND IS NOT TO BE USED OR REPRODUCED WITHOUT PERMISSION OF COMPUTERVISION CORPORATION.

MATERIAL	PART NUMBER	NEXT ASSEMBLY	QTY
NONE		SEE SHT 1	
FINISH: NONE			

TOLERANCES
DECIMAL
.XX ± .01
.XXX ± .005
.XXXX ± .0010
FRACTIONAL ± 1/64
ANGULAR ± 1°00'

DRN T. Rooke 9/4/
CHK
ENGR
PROJ
MFG
SIGNATURE DATE

REMOVE ALL BURRS AND SHARP EDGES

SYM	REVISION DESCRIPTION	APPD	DATE
	SEE SHT. 1		

TITLE INTERACTIVE CONTROLLER BOARD

SCALE NONE
DWG NO. DS14E1007
UNIT —
WT. —
SHEET 6 OF 13 SHEETS

COMPUTERVISION CORP.
SOUTH AVENUE
BURLINGTON, MASS. 01803

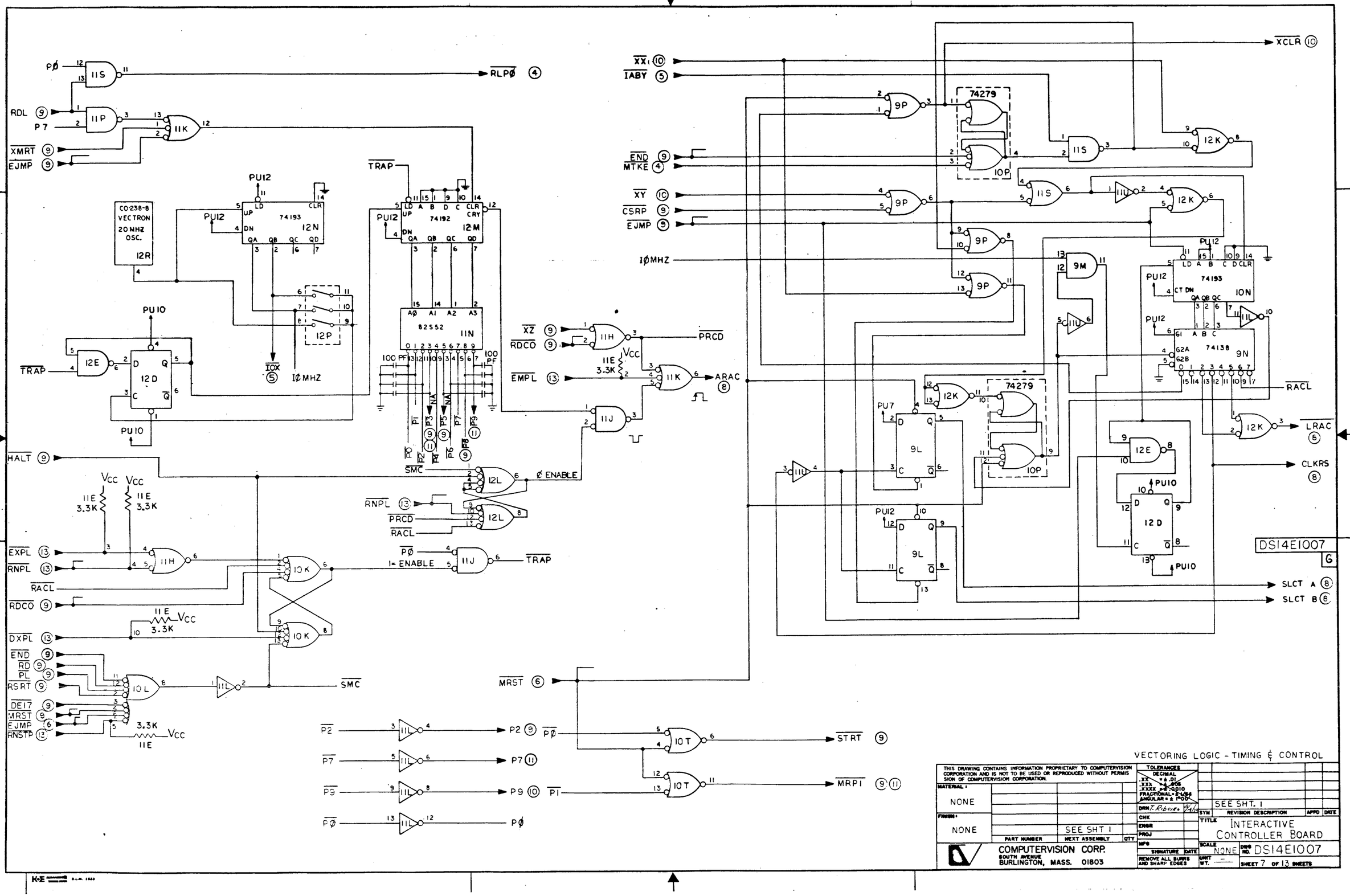

VECTORING LOGIC - TIMING & CONTROL

THIS DRAWING CONTAINS INFORMATION PROPRIETARY TO COMPUTERVISION CORPORATION AND IS NOT TO BE USED OR REPRODUCED WITHOUT PERMISSION OF COMPUTERVISION CORPORATION.

MATERIAL: NONE

FINISH: NONE

PART NUMBER	NEXT ASSEMBLY	QTY
	SEE SHT 1	

COMPUTERVISION CORP.
SOUTH AVENUE
BURLINGTON, MASS. 01803

TOLERANCES
DECIMAL
.XX = ± .01
.XXX = ± .005
.XXXX = ± .0010
FRACTIONAL = ± 1/64
ANGULAR = ± 1°00'

DRN T. Ribeiro 9/4/79
CHK
ENGR
PROJ
MFG
SIGNATURE DATE
REMOVE ALL BURRS AND SHARP EDGES

SYM	REVISION DESCRIPTION	APPD	DATE
	SEE SHT. 1		

TITLE INTERACTIVE CONTROLLER BOARD

SCALE NONE
DWG NO. DS14E1007
UNIT WT. —
SHEET 7 OF 13 SHEETS

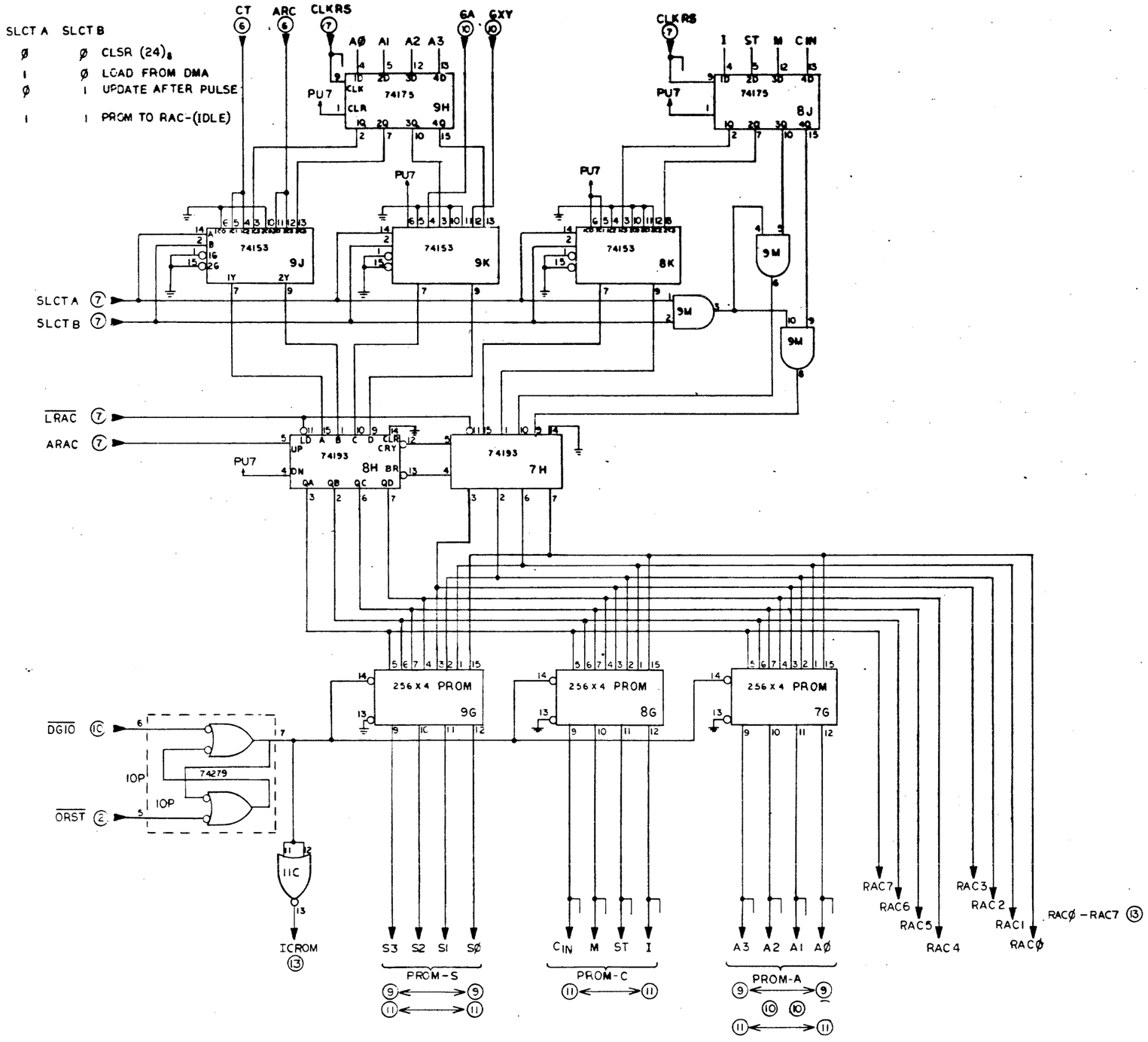

DS14E1007

G

VECTORING PROM & PROGRAM CONTROL

THIS DRAWING CONTAINS INFORMATION PROPRIETARY TO COMPUTERVISION CORPORATION AND IS NOT TO BE USED OR REPRODUCED WITHOUT PERMISSION OF COMPUTERVISION CORPORATION.

MATERIAL: NONE

FINISH: NONE

PART NUMBER | NEXT ASSEMBLY | QTY: SEE SHT 1

COMPUTERVISION CORP.
SOUTH AVENUE
BURLINGTON, MASS. 01803

TOLERANCES
DECIMAL
.XX = ± .01
.XXX = ± .005
.XXXX = ± .0010
FRACTIONAL = ± 1/64
ANGULAR = ± 1°00'

DRN P.S. Lyn 8/1/74
CHK
ENGR
PROJ
MFG
SIGNATURE | DATE
REMOVE ALL BURRS AND SHARP EDGES

SYM | REVISION DESCRIPTION | APPD | DATE: SEE SHT. 1

TITLE: INTERACTIVE CONTROLLER BOARD

SCALE: NONE | DWG NO. DS14E1007

UNIT WT. — | SHEET 8 OF 13 SHEETS

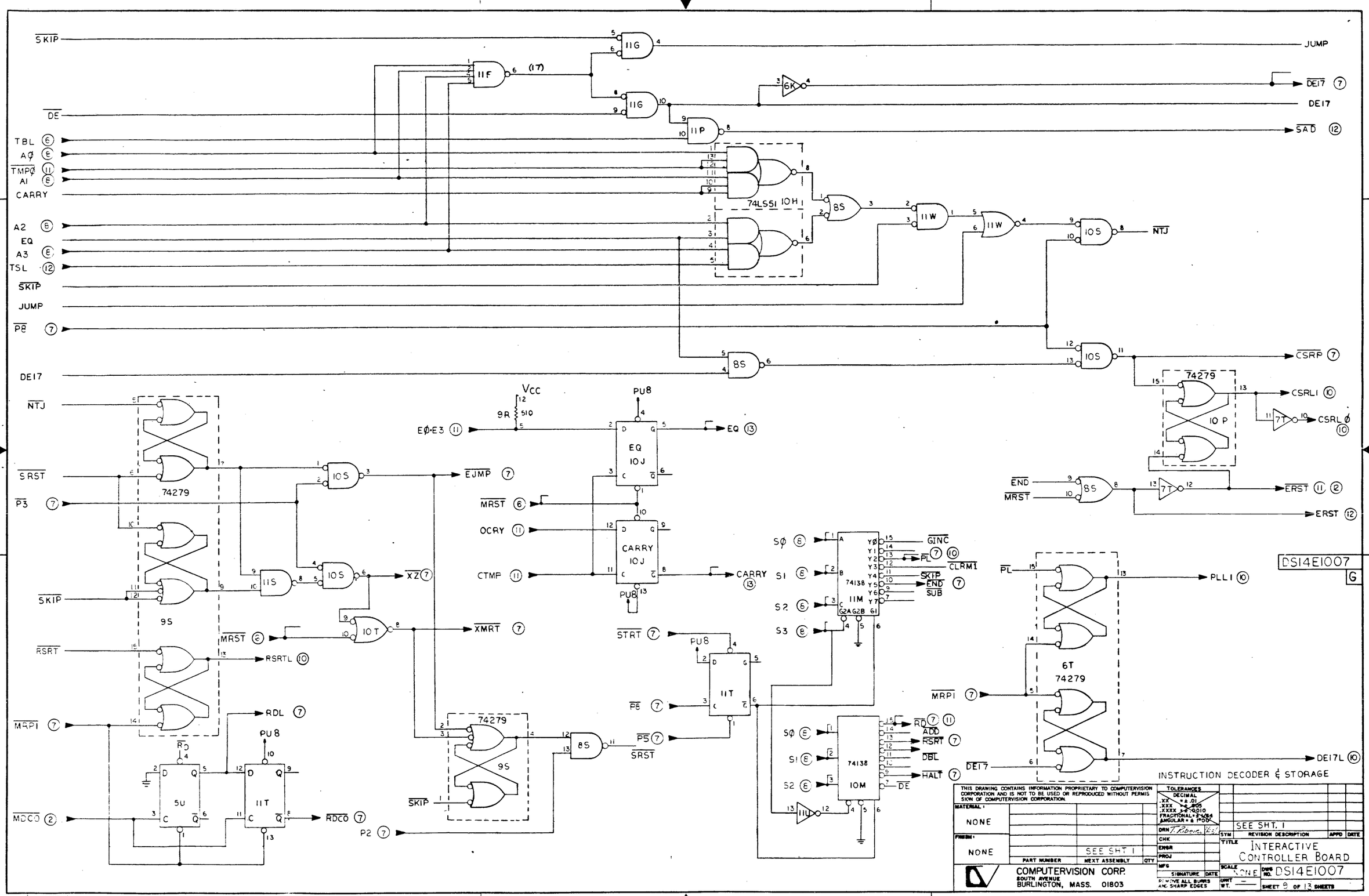

SKIP
DE
TBL
AØ
TMPØ
A1
CARRY
A2
EQ
A3
TSL
SKIP
JUMP
P8
DE17
NTJ
SRST
P3
SKIP
RSRT
MRP1
MDCO
JUMP
DE17
SAD
NTJ
CSRP
CSRL1
CSRLØ
END
MRST
ERST
ERST
EJMP
XZ
XMRT
RSRTL
RDL
RDCO
P2
EØ·E3
MRST
OCRY
CTMP
EQ
CARRY
STRT
P8
P5
SRST
SØ
S1
S2
S3
GINC
PL
CLRM1
SKIP
END
SUB
RD
ADD
RSRT
DBL
HALT
DE
PL
PLL1
MRP1
DE17
DE17L
74LS51
74279
74138
74279
74279
74279
74138
9S
9S
10H
10J
10J
10P
10S
11F
11G
11G
11P
11S
11T
11U
11W
11W
6K
6T
7T
7T
8S
8S
8S
8S
10T
5U
11T
11M
10M
DS14E1007
G
INSTRUCTION DECODER & STORAGE
THIS DRAWING CONTAINS INFORMATION PROPRIETARY TO COMPUTERVISION CORPORATION AND IS NOT TO BE USED OR REPRODUCED WITHOUT PERMISSION OF COMPUTERVISION CORPORATION.
MATERIAL: NONE
FINISH: NONE
PART NUMBER
NEXT ASSEMBLY
QTY
SEE SHT 1
COMPUTERVISION CORP.
SOUTH AVENUE
BURLINGTON, MASS. 01803
TOLERANCES
DECIMAL
.XX = ±.01
.XXX = ±.005
.XXXX = ±.0010
FRACTIONAL = ±1/64
ANGULAR = ±1°00'
DRN
CHK
ENGR
PROJ
MFG
SIGNATURE
DATE
REMOVE ALL BURRS AND SHARP EDGES
SEE SHT. 1
SYM
REVISION DESCRIPTION
APPD
DATE
TITLE
INTERACTIVE CONTROLLER BOARD
SCALE NONE
DWG NO. DS14E1007
UNIT WT.
SHEET 9 OF 13 SHEETS

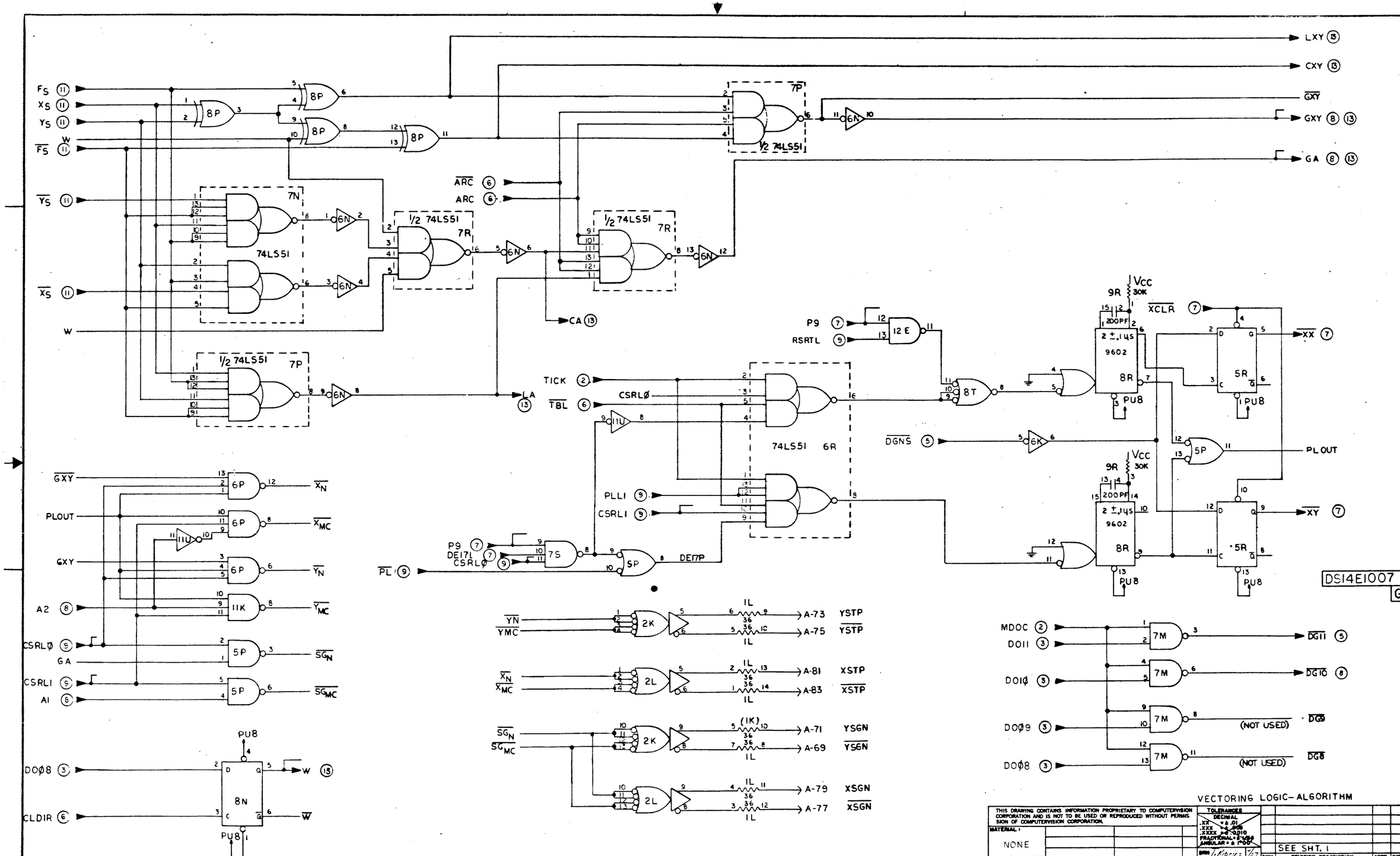

VECTORING LOGIC–ALGORITHM

THIS DRAWING CONTAINS INFORMATION PROPRIETARY TO COMPUTERVISION CORPORATION AND IS NOT TO BE USED OR REPRODUCED WITHOUT PERMISSION OF COMPUTERVISION CORPORATION.

MATERIAL: NONE

FINISH: NONE

PART NUMBER	NEXT ASSEMBLY	QTY
	SEE SHT 1	

COMPUTERVISION CORP.
SOUTH AVENUE
BURLINGTON, MASS. 01803

TOLERANCES
DECIMAL
.XX = ± .01
.XXX = ± .005
.XXXX = ± .0010
FRACTIONAL = ± 1/64
ANGULAR = ± 1°00'

DRN T. Kibbie 7/27
CHK
ENGR
PROJ
MFG
SIGNATURE DATE
REMOVE ALL BURRS AND SHARP EDGES

SEE SHT. 1

SYM	REVISION DESCRIPTION	APPD	DATE

TITLE INTERACTIVE CONTROLLER BOARD

SCALE NONE
DWG NO. DS14E1007
UNIT WT. —
SHEET 10 OF 13 SHEETS

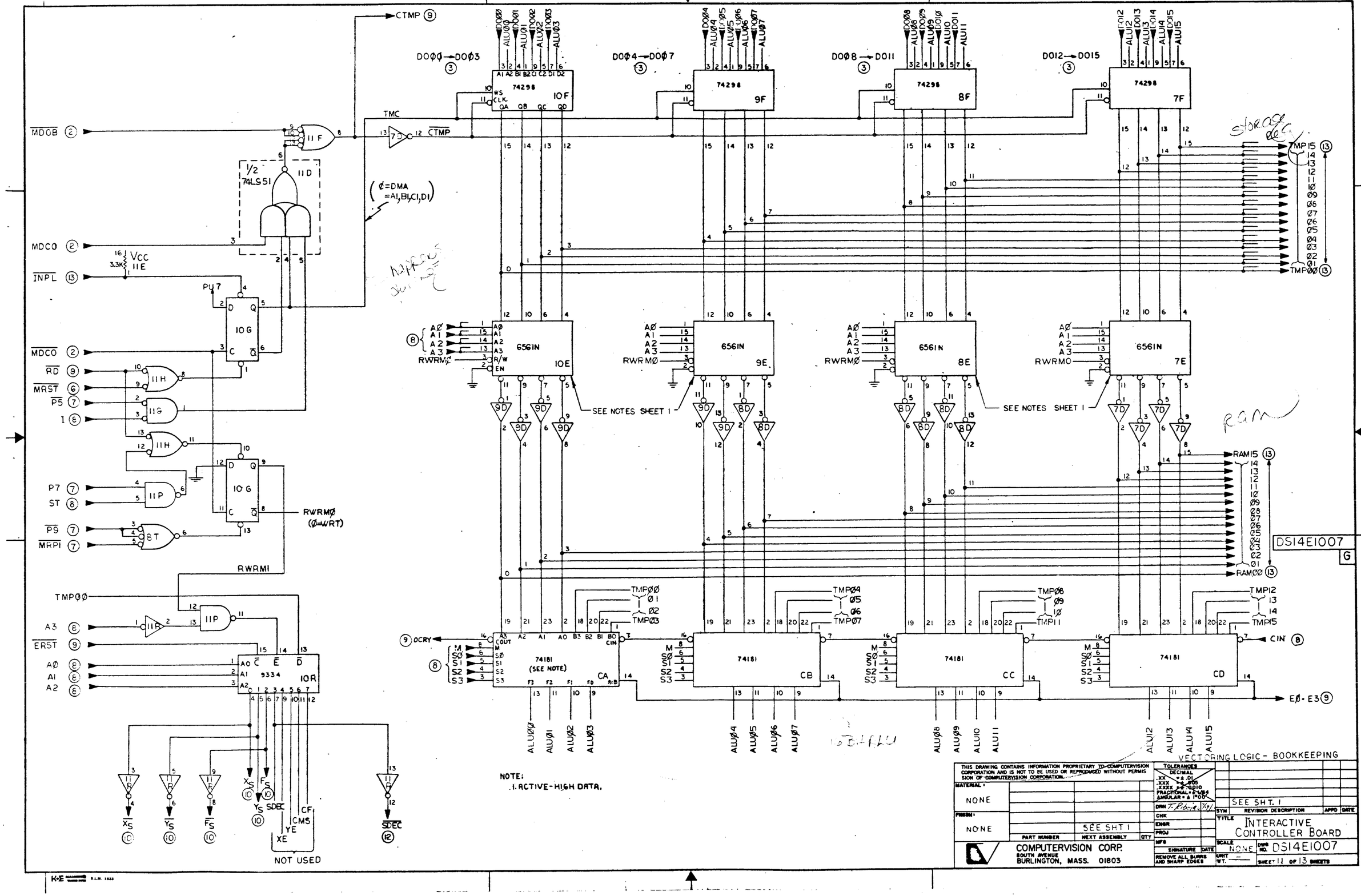

NOTE:
1. ACTIVE-HIGH DATA.

VECTORING LOGIC - BOOKKEEPING

THIS DRAWING CONTAINS INFORMATION PROPRIETARY TO COMPUTERVISION CORPORATION AND IS NOT TO BE USED OR REPRODUCED WITHOUT PERMISSION OF COMPUTERVISION CORPORATION.

MATERIAL: NONE

FINISH: NONE

PART NUMBER	NEXT ASSEMBLY	QTY
	SEE SHT 1	

COMPUTERVISION CORP.
SOUTH AVENUE
BURLINGTON, MASS. 01803

TOLERANCES
DECIMAL
.XX = ± .01
.XXX = ± .005
.XXXX = ± .0010
FRACTIONAL = ± 1/64
ANGULAR = ± 1°00'

DRN T. Ribeiro 7/9/

CHK
ENGR
PROJ
MFG
SIGNATURE DATE

REMOVE ALL BURRS AND SHARP EDGES

SYM	REVISION DESCRIPTION	APPD	DATE
	SEE SHT. 1		

TITLE: INTERACTIVE CONTROLLER BOARD

SCALE: NONE

DWG NO. DS14E1007

UNIT WT. —

SHEET 11 OF 13 SHEETS

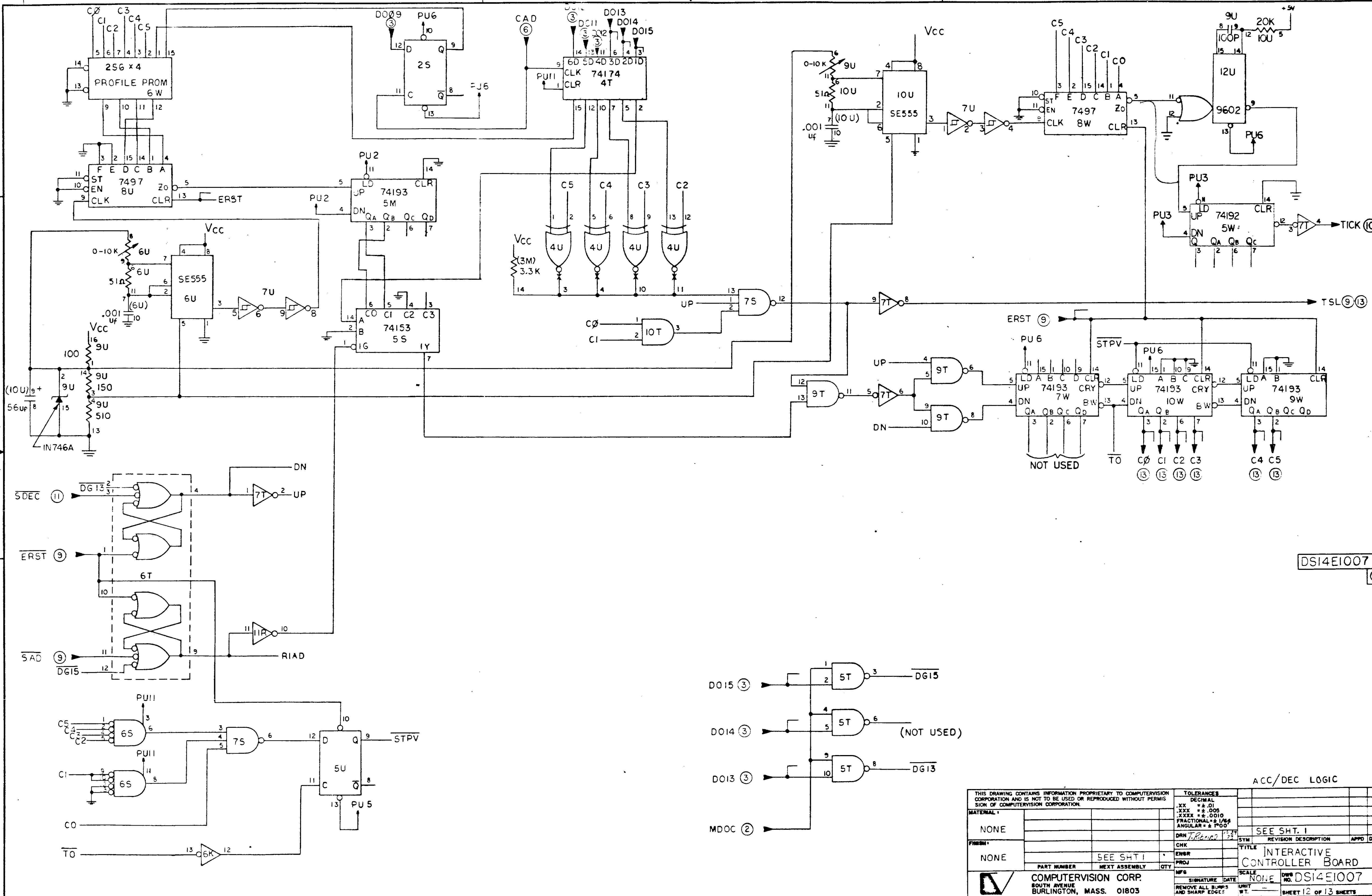

ACC/DEC LOGIC

THIS DRAWING CONTAINS INFORMATION PROPRIETARY TO COMPUTERVISION CORPORATION AND IS NOT TO BE USED OR REPRODUCED WITHOUT PERMISSION OF COMPUTERVISION CORPORATION.

MATERIAL:	NONE
FINISH:	NONE
PART NUMBER	NEXT ASSEMBLY: SEE SHT 1

TOLERANCES: DECIMAL .XX = ±.01, .XXX = ±.005, .XXXX = ±.0010, FRACTIONAL = ± 1/64, ANGULAR = ± 1°00'

REMOVE ALL BURRS AND SHARP EDGES

SEE SHT. 1

TITLE: INTERACTIVE CONTROLLER BOARD

SCALE: NONE

DWG NO. DS14E1007

SHEET 12 OF 13 SHEETS

COMPUTERVISION CORP.
SOUTH AVENUE
BURLINGTON, MASS. 01803

NOVA PIN NOTATION — WIRING LIST NOTATION

CONN. A

A1	AA1	GRD	A2	AB1	GRD
A3	AA2	+5V	A4	AB2	+5V
A5	AA3		A6	AB3	-5V
A7	AA4		A8	AB4	
A9	AA5		A10	AB5	+V INH
A11	AA6		A12	AB6	
A13	AA7		A14	AB7	
A15	AA8		A16	AB8	
A17	AA9		A18	AB9	
A19	AA10		A20	AB10	
A21	AA11		A22	AB11	
A23	AA12		A24	AB12	
A25	AA13		A26	AB13	
A27	AA14		A28	AB14	
A29	AA15		A30	AB15	
A31	AA16		A32	AB16	
A33	AA17		A34	AB17	GRD
A35	AA18		A36	AB18	
A37	AA19		A38	AB19	MSKO
A39	AA20		A40	AB20	INTA
A41	AA21		A42	AB21	DATIB
A43	AA22		A44	AB22	DATIA
A45	AA23		A46	AB23	$\overline{\text{MSKI}}$
A47	AA24	ICNEI	A48	AB24	DATOC
A49	AA25	OCNEI	A50	AB25	CLR
A51	AA26		A52	AB26	STRT
A53	AA27		A54	AB27	DATIC
A55	AA28		A56	AB28	DATOB
A57	AA29		A58	AB29	DATOA
A59	AA30		A60	AB30	$\overline{\text{DCHA}}$
A61	AA31	$\overline{\text{ICPT}}$	A62	AB31	$\overline{\text{DS4}}$
A63	AA32	$\overline{\text{ICPT}}$	A64	AB32	$\overline{\text{DS3}}$
A65	AA33	$\overline{\text{ICBY}}$	A66	AB33	$\overline{\text{DS2}}$
A67	AA34	$\overline{\text{ICBY}}$	A68	AB34	$\overline{\text{DS1}}$
A69	AA35	$\overline{\text{YSCN}}$	A70	AB35	$\overline{\text{IORST}}$
A71	AA36	$\overline{\text{YSCN}}$	A72	AB36	$\overline{\text{DS0}}$
A73	AA37	$\overline{\text{YSTP}}$	A74	AB37	IOPLS
A75	AA38	YSTP	A76	AB38	
A77	AA39	$\overline{\text{XSCK}}$	A78	AB39	
A79	AA40	$\overline{\text{XSCN}}$	A80	AB40	$\overline{\text{SEL6}}$
A81	AA41	$\overline{\text{XSTP}}$	A82	AB41	$\overline{\text{SEL8}}$
A83	AA42	XSTP	A84	AB42	
A85	AA43	TESY	A86	AB43	
A87	AA44	$\overline{\text{TESY}}$	A88	AB44	
A89	AA45	TDTA	A90	AB45	
A91	AA46	$\overline{\text{TDTA}}$	A92	AB46	VDR
A93	AA47	$\overline{\text{STEP OUT}}$	A94	AB47	$\overline{\text{DCPH IN}}$
A95	AA48	$\overline{\text{STEP OUT}}$	A96	AB48	$\overline{\text{INTP IN}}$
A97	AA49	+5V	A98	AB49	+5V
A99	AA50	GRD	A100	AB50	GRD

SEE NOTE 1

SEE NOTE 2

CONN. B

B1	BA1	GRD	B2	BB1	GRD
B3	BA2	+5V	B4	BB2	+5V
B5	BA3		B6	BB3	
B7	BA4		B8	BB4	
B9	BA5		B10	BB5	
B11	BA6		B12	BB6	
B13	BA7		B14	BB7	
B15	BA8		B16	BB8	
B17	BA9	$\overline{\text{ICHMZ}}$	B18	BB9	
B19	BA10		B20	BB10	
B21	BA11	DCHM1	B22	BB11	
B23	BA12		B24	BB12	
B25	BA13		B26	BB13	
B27	BA14		B28	BB14	
B29	BA15	INTR	B30	BB15	
B31	BA16		B32	BB16	
B33	BA17	DCHO	B34	BB17	
B35	BA18	$\overline{\text{DCHR}}$	B36	BB18	
B37	BA19	DCHI	B38	BB19	
B39	BA20	OMLO	B40	BB20	
B41	BA21	$\overline{\text{OMHI}}$	B42	BB21	
B43	BA22		B44	BB22	
B45	BA23		B46	BB23	+VINH
B47	BA24		B48	BB24	
B49	BA25	OBSY	B50	BB25	GRD
B51	BA26		B52	BB26	
B53	BA27		B54	BB27	
B55	BA28	DATA 7	B56	BB28	DATA 14
B57	BA29	DATA 6	B58	BB29	DATA 11
B59	BA30	DATA 5	B60	BB30	DATA 8
B61	BA31	DATA 4	B62	BB31	DATA Ø
B63	BA32	DATA 3	B64	BB32	DATA 13
B65	BA33	DATA 2	B66	BB33	DATA 10
B67	BA34	DATA 1	B68	BB34	DATA 9
B69	BA35	DATA Ø	B70	BB35	DATA 12
B71	BA36	DATA 11	B72	BB36	DATA 15
B73	BA37	DATA 9	B74	BB37	
B75	BA38	DATA 10	B76	BB38	
B77	BA39	DATA 8	B78	BB39	
B79	BA40	DATA 12	B80	BB40	
B81	BA41	+5V	B82	BB41	DATA 2
B83	BA42		B84	BB42	+VINH
B85	BA43		B86	BB43	
B87	BA44		B88	BB44	
B89	BA45		B90	BB45	
B91	BA46		B92	BB46	
B93	BA47		B94	BB47	
B95	BA48	DATA 6	B96	BB48	
B97	BA49	+5V	B98	BB49	+5V
B99	BA50	GRD	B100	BB50	GRD

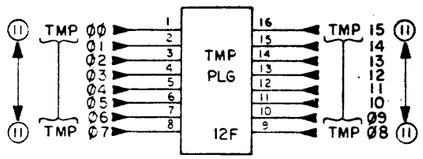

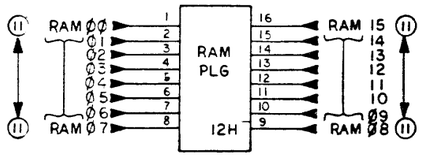

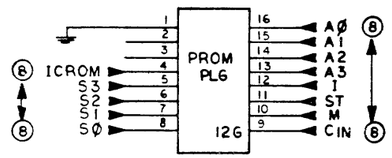

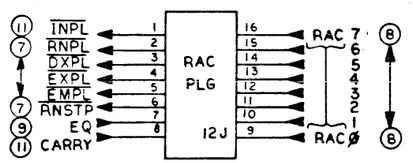

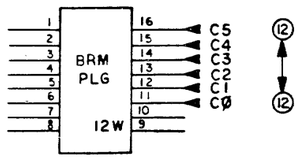

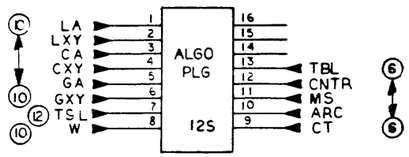

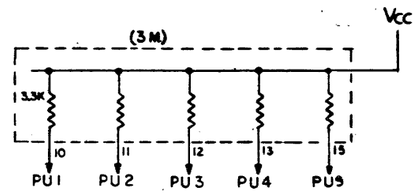

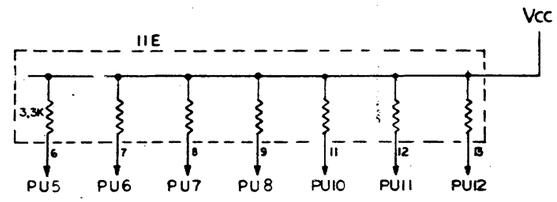

NOTE:

1. CROSSHATCHED POSITIONS INDICATE MEMORY SIGNALS.
2. CONNECT C525 CABLE TO THESE PINS.

DS14E1007 G

THIS DRAWING CONTAINS INFORMATION PROPRIETARY TO COMPUTERVISION CORPORATION AND IS NOT TO BE USED OR REPRODUCED WITHOUT PERMISSION OF COMPUTERVISION CORPORATION.

MATERIAL	NONE
FINISH	NONE
PART NUMBER	SEE SHT 1
NEXT ASSEMBLY	
QTY	

TOLERANCES: DECIMAL .XX ±.01, .XXX ±.005, .XXXX ±.0010; FRACTIONAL ±1/64; ANGULAR ±1°00

DRN J.R.Beine 9/24 · CHK · ENGR · PROJ · MFG · SIGNATURE DATE

REMOVE ALL BURRS AND SHARP EDGES

SEE SHT. 1

SYM	REVISION DESCRIPTION	APPD	DATE

TITLE: INTERACTIVE CONTROLLER BOARD

COMPUTERVISION CORP.
SOUTH AVENUE
BURLINGTON, MASS. 01803

SCALE NONE · DWG NO. DS14E1007 · SHT WT. — · SHEET 13 OF 13 SHEETS

THIS DRAWING CONTAINS INFORMATION PROPRIETARY TO COMPUTERVISION CORPORATION AND IS NOT TO BE USED OR REPRODUCED WITHOUT PERMISSION OF COMPUTERVISION CORPORATION.

INTERACTIVE CONTROLLER BD. COMPUTERIZED ALPHA SIGNAL NAME LIST.

DO NOT MANUFACTURE BY THIS DOCUMENT

SHT	29	30	31	32	33	34	35	36	37	38	39	40	41	42	43	44	Ø
REV.																	A

SHT	1	2	3	4	5	6	7	8	9	10	11	12	13	14	15	16	17	18	19	20	21	22	23	24	25	26	27	28
REV.	A	A	A	A	A	A	A	A	A	A	A	A	A	A	A													

SYM	REVISION DESCRIPTION	APPD	DATE
A	REL ECO #1273	HB	9/3

SYM	REVISION DESCRIPTION	APPD	DATE

PART NUMBER	NEXT ASSEMBLY	QTY
	L14X1031	1
	L14X1020	1

	SIGNATURE	DATE
DRN	H. B.	7/13
CHK		
ENGR	H. B	9/13
PROJ	AB	9/13
MFG		

TITLE
INTERACTIVE CONTROLLER BD
ALPHA SIGNAL NAMES

DWG NO. AW14E 1012

SHEET Ø OF 15 SHEETS

F67IRSIIIA

COMPUTERVISION CORP.
SOUTH AVENUE
BURLINGTON, MASS. 01803

```
  0001   .MAIN
01                            ; INTERACTIVE CONTROLLER BD.
02                            ; ALPHA SIGNAL NAMES
03                            ; AW14E 1012   REV A
04
05 00000 000002 GODC:   2.          ;GEN.  OUTPUT DEVICE CODE.
06 00001 000003 GIDC:   3.          ;GEN.  INPUT DEVICE CODE.
07 00002 000005 NB15.:  5.          ;NOVA BUS BIT 15
08 00003 000006 NB14..  6.          ;NOVA BUS BIT 14
09 00004 000007 NB13..  7.          ;NOVA BUS BIT 13
10 00005 000010 NB12.:  8.          ;NOVA BUS BIT 12
11 00006 000011 NB11..  9.          ;NOVA BUS BIT 11
12 00007 000012 NB10 :  10.         ;NOVA BUS BIT 10
13 00010 000013 NB09.   11.         ;NOVA BUS BIT 09
14 00011 000014 NB08.:  12.         ;NOVA BUS BIT 08
15 00012 000015 NB07..  13.         ;NOVA BUS BIT 07
16 00013 000016 NB06..  14.         ;NOVA BUS BIT 06
17 00014 000017 NB05..  15.         ;NOVA BUS BIT 05
18 00015 000020 NB04.:  16.         ;NOVA BUS BIT 04
19 00016 000021 NB03..  17.         ;NOVA BUS BIT 03
20 00017 000022 NB02 :  18.         ;NOVA BUS BIT 02
21 00020 000023 NB01..  19.         ;NOVA BUS BIT 01
22 00021 000024 NB00..  20.         ;NOVA BUS BIT 00
23 00022 000025 OIPI:   21.         ;OUTPUT INTERRUPT PRIORITY IN.
24 00023 000026 BINTA.  22.         ;BUFFERED INTERRUPT ACKNOWLEDGE (INTA)
25 00024 000027 OIR1.   23.         ;OUTPUT INTERRUPT REQUEST (1).
26 00025 000030 IPI.    24.         ;INPUT INTERRUPT PRIORITY IN.
27 00026 000031 IIR1.   25.         ;INPUT INTERRUPT REQUEST (1).
28 00027 000032 MDIB..  26.         ;MY DATA IN B.  PUTS CORE ADDRESS COUNTER ON
29                                  ;THE BUS.
30 00030 000033 MON. .  27.         ;MEMORY ON.  PUTS CORE ADDRESS COUNTER ON
31                                  ;THE BUS DURING DMA OP.
32 00031 000034 MDIA.   28.         ;MY DATA IN A.  PUTS INTERACT DATA ON THE BUS.
33 00032 000035 DO00.   29.         ;DATA OUT.  RCVD DATA FROM CPU.  BUFFERED AND
34                                  ;INVERTED.
35 00033 000036 DO01.   30.
36 00034 000037 DO02.   31.
37 00035 000040 DO03.   32.
38 00036 000041 DO04.   33.
39 00037 000042 DO05.   34.
40 00040 000043 DO06.   35.
41 00041 000044 DO07.   36.
42 00042 000045 DO08.   37.
43 00043 000046 DO09.   38.
44 00044 000047 DO10.   39.
45 00045 000050 DO11.   40.
46 00046 000051 DO12.   41.
47 00047 000052 DO13.   42.
48 00050 000053 DO14.   43.
49 00051 000054 DO15.   44.          ;DATA OUT.
50 00052 000055 DC11.   45.          ;DEVICE CODE.
51 00053 000056 DC12.   46.
52 00054 000057 DC13.   47.
53 00055 000060 DC14.   48.
54 00056 000061 CAC00.  49.          ;CORE ADDRESS COUNTER (CAC) MSB.
55 00057 000062 CAC01.  50.
56 00060 000063 CAC02.  51.
57 00061 000064 CAC03.  52.
58 00062 000065 CAC04.  53.
59 00063 000066 CAC05.  54.
```

```
  0002  .MAIN
01 00064 000067 CAC06:   55.
02 00065 000070 CAC07.   56.
03 00066 000071 CAC08:   57.
04 00067 000072 CAC09:   58.
05 00070 000073 CAC10:   59.
06 00071 000074 CAC11:   60.
07 00072 000075 CAC12:   61.
08 00073 000076 CAC13:   62.
09 00074 000077 CAC14:   63.
10 00075 000100 CAC15.   64.      ;CORE ADDRESS COUNTER.  LSB.
11 00076 000101 DI00:    65.      ;DATA IN.  RCVD INTERACT DATA.  MSB.
12 00077 000102 DI01.    66.
13 00100 000103 DI02:    67.
14 00101 000104 DI03.    68.
15 00102 000105 DI04:    69.
16 00103 000106 DI05:    70.
17 00104 000107 DI06:    71.
18 00105 000110 DI07.    72.
19 00106 000111 DI08.    73.
20 00107 000112 DI09:    74.
21 00110 000113 DI10:    75.
22 00111 000114 DI11.    76.
23 00112 000115 DI12:    77.
24 00113 000116 DI13:    78.
25 00114 000117 DI14:    79.
26 00115 000120 DI15:    80.      ;DATA IN.  LSB.
27 00116 000121 RQEN.    81       ;REQUEST ENABLE.  CPU GENERATED SIGNAL.(RQENB)
28 00117 000123 MSKO.    83.      ;MASK OUT.  CPU GENERATED SIGNAL.
29 00120 000125 DCHA.    85.      ;DATA CHANNEL ACKNOWLEDGE.  CPU GENERATED
30                                ;SIGNAL.
31 00121 000127 INTAX:   87.      ;INTERRUPT ACKNOWLEDGE.  CPU GENERATED
32                                ;SIGNAL:  (INTA)
33 00122 000131 IORT:    89.      ;I/ORST.  CPU GENERATED SIGNAL.
34 00123 000133 STRT:    91.      ;START.  CPU GENERATED SIGNAL.
35 00124 000135 CLR:     93.      ;CLEAR.  CPU GENERATED SIGNAL.
36 00125 000137 DATIA:   95.      ;DATA INPUT A.  CPU GENERATED SIGNAL  USED FOR
37                                ;READING DATA.
38 00126 000141 DATIB:   97.      ;DATA INPUT B.  CPU GENERATED SIGNAL  USED FOR
39                                ;READING CAC.
40 00127 000143 DATOA:   99.      ;DATA OUTPUT A.  CPU GENERATED SIGNAL.  USED FOR
41                                ;SINGLE CHARACTER OUTPUT.
42 00130 000145 DATOB:   101.     ;DATA OUTPUT B.  CPU GENERATED SIGNAL.  USED FOR
43                                ;SETTING CAC.
44 00131 000147 DATOC:   103.     ;DATA OUTPUT C.  CPU GENERATED SIGNAL.  USED FOR
45                                ;DIAG.
46 00132 000151 IPI. :   105.     ;INTERRUPT PRIORITY IN.  CPU GENERATED SIGNAL.
47 00133 000152 DCPI. :  106.     ;DATA CHANNEL PRIORITY IN.  CPU GENERATED
48                                ;SIGNAL.
49 00134 000153 DCHO.    107.     ;DATA CHANNEL OUT.  CPU GENERATED SIGNAL.
50 00135 000155 DS0:     109.     ;DEVICE SELECT.  CPU GENERATED SIGNAL.  MSB.
51 00136 000156 DS1:     110.
52 00137 000157 DS2:     111.
53 00140 000160 DS3.     112.
54 00141 000161 DS4:     113.
55 00142 000162 DS5:     114.     ;DEVICE SELECT.  LSB.
56 00143 000163 IPO. :   115.     ;INTERRUPT PRIORITY OUT.
57 00144 000164 DCPO. :  116.     ;DATA CHANNEL PRIORITY OUT.
58 00145 000202 BRQEN:   130.     ;BUFFERED REQ.  ENABLE.
59 00146 000203 BMSKO.   131.     ;BUFFERED MSKO.
```

```
  0003   .MAIN
01 00147 000204 BDCHR.   132      ;BUFFERED DCHR.
   00150 000205 ORST. :  133.     ;OUTPUT RESET.
   00151 000206 GRST. :  134.     ;GENERAL RESET.  BUFFERED IORST.
04 00152 000207 IRST.    135.     ;INPUT RESET.
05 00153 000210 IRST. :  136.
06 00154 000211 OSRT. :  137.     ;OUTPUT START.
07 00155 000212 OSRT.    138.
08 00156 000213 ICLR. :  139.     ;INPUT CLR.
09 00157 000214 OCLR. :  140.     ;OUTPUT CLR.
10 00160 000215 MDIA. :  141.     ;MY DATA INPUT A.  DATIA WITH DEVICE CODE
11 00161 000216 MDOA. :  142.     ;MY DATA OUTPUT A.  DATOA WITH DEVICE CODE.
12 00162 000217 MDOB. :  143.     ;MY DATA OUTPUT B.  DATOB WITH DEVICE CODE.
13 00163 000220 MDOC.    144.     ;MY DATA OUTPUT C.  DATOC WITH DEVICE CODE.
14 00164 000221 IIR0.    145.     ;INPUT INTERRUPT REQ (0).
15 00165 000222 OIR0:    146.     ;OUTPUT INTERRUPT REQ (0).
16 00166 000223 DCHR0:   147.     ;DATA CHANNEL REQ (0).
17 00167 000224 DCHS1:   148.     ;DATA CHANNEL SYNC (1).
18 00170 000225 DCPI.    149.     ;DATA CHANNEL PRIORITY IN.  BUFFERED DAISY
19                                ;CHAIN INPUT.
20 00171 000226 MDCO. .  150.     ;MY DATA CHANNEL OUT.
21 00172 000227 MDCO.    151.
22 00173 000230 DIDC.    152.     ;DECODED INPUT DEVICE CODE
23 00174 000231 DODC.    153.     ;DECODED OUTPUT DEVICE CODE.
24 00175 000232 RWIB. :  155.     ;R/W INPUT BUFFER.  XFERS INTERACT DATA FROM
25                                ;SERIAL TO PARALLEL CONVERTER INTO RAM.
26 00176 000236 CIB:     158.     ;CLR INPUT BUFFER.
27 00177 000237 SYNC. .  159.     ;INDICATES START OF XMITION.
28 00200 000264 RCLK.    180.     ;RCV CLK.
29 00201 000265 RCLK. :  181.
30 00202 000266 TRL1.    182      ;TRAIL 1.  LAST BIT IN THE RECEIVED WORD.
31
32 00203 000271 IBA0:    185.     ;INPUT BUFFER ADDRESS 0.
33 00204 000272 IBA1:    186.     ;INPUT BUFFER ADDRESS 1.
34 00205 000273 IBA2.    187.     ;INPUT BUFFER ADDRESS 2.
35 00206 000314 LEAD0:   204.     ;FIRST BIT IN THE RECEIVED WORD.
36 00207 000315 I0X:     205.
37 00210 000316 IDNE0:   206.     ;INPUT DONE.  INPUT DONE F/F (0).
38 00211 000317 RCDT. .  207.     ;RCVD DATA.  RCVD FROM IA OR CRT.
39 00212 000320 DGNS. :  208.     ;DIAGNOSTICS XMITER CONN.  TO RCVR.
40 00213 000321 CIDNE:   209.     ;CLR INPUT DONE.
41 00214 000322 DG11 :   210.     ;DGNSTCS 11  SIGNAL WHICH CONNECTS
42                                ;  XMITER TO RCVR.
43 00215 000323 SPDT0.   211.     ;SUPERVISORY DATA.  COMMANDS TO IA OR CRT.
44 00216 000324 IDNE1:   212.     ;INPUT DONE (1).
45 00217 000326 SELD. .  214.     ;SELECT DONE.  SEE NOVA INSTRUCTIONS.
46 00220 000327 INTR. :  215.     ;INTERRUPT TO CPU.
47 00221 000330 SELB. :  216.
48 00222 000331 ODNE1:   217.     ;OUTPUT DONE (1).
49 00223 000332 OBSY1.   218.     ;OUTPUT BUSY (1).
50 00224 000333 XN. .    219.     ;X NORMAL.  OUTPUT X PULSE DUE TO ALGORITHM.
51 00225 000334 XMC. .   220.     ;X MC.  OUTPUT X PULSE DUE TO MICRO COMPUTER.
52 00226 000335 SGN. :   221
53 00227 000336 SGMC. .  222.
54 00230 000337 YN. :    223.
   00231 000340 YMC. :   224.
   00232 000341 SPDT1.   225.     ;SUPERVISORY DATA (1).
   00233 000342 TDTA.    226.     ;TABLE DATA.  ON INTERCONNECTION DIAG.  THIS
58                                ;SIGNAL IS TBL DTA/H.
59 00234 000344 TDTA. :  228.     ;ON INTERCONNECTION DIAG.  THIS SIGNAL
```

```
                                                ;IS TBL DTA/L
 2 00235 000345 TBSY. :   229.                  ;ON INTERCONNECTION DIAG. THIS
03                                              ;SIGNAL IS TBL BSY/L.
04 00236 000347 TBSY:    231.                  ;TABLE BUSY ON INTERCONNECTION DIAG.
05                                              ;THIS SIGNAL IS TBL BSY/H.
06 00237 000350 XSTP:    232.                  ;ON INTERCONNECTION DIAG. THIS SIGNAL
07                                              ;IS XSTEP 1/P.
08 00240 000352 XSTP. .  234.                  ;ON INTERCONNECTION DIAG. THIS SIGNAL
09                                              ;IS XSTEP 1/N.
10 00241 000354 XSGN:    236.                  ;ON INTERCONNECTION DIAG. THIS SIGNAL
11                                              ;IS XSIGN 1/L.
12 00242 000356 XSGN. :  238.                  ;ON INTERCONNECTION DIAG. THIS SIGNAL
13                                              ;IS XSIGN 1/H.
14 00243 000360 YSTP.    240.                  ;ON INTERCONNECTION DIAG. THIS SIGNAL
15                                              ;IS XSTEP 1/P.
16 00244 000362 YSTP. :  242.                  ;ON INTERCONNECTION DIAG. THIS SIGNAL
17                                              ;IS YSTEP 1/N.
18 00245 000364 YSGN:    244.                  ;ON INTERCONNECTION DIAG. THIS SIGNAL
19                                              ;IS YSIGN 1/H.
20 00246 000366 YSGN. .  246.                  ;ON INTERCONNECTION DIAG. THIS SIGNAL
21                                              ;IS YSIGN 1/L.
22 00247 000370 ICDT. :  248.                  ;INTERACTIVE CONTROLLER DATA (SUPERVISORY
23                                              ;CHANNEL). XX IODTA 1/L.
24 00250 000372 ICDT.    250.                  ;ON INTERCONNECTION DIAG. THIS SIGNAL
25                                              ;IS IODTA 1/H.
26 00251 000374 ICBY. .  252.                  ;ON INTERCONNECTION DIAG. THIS SIGNAL
27                                              ;IS IOBSY/L.
28 00252 000376 ICBY.    254.                  ;INTERACTIVE CONTROLLER BUSY. ON INTER-
29                                              ;CONNECTION DIAG. THIS SIGNAL IS IOBSY/H.
30 00253 000402 IABY. :  258.                  ;IA BUSY.
31 00254 000406 I0MHZ:   262.
32 00255 000411 DG10. .  265.                  ;DIAGNOSTICS 10.
33 00256 000412 DG9. .   266.                  ;DIAGNOPTICS 9.
34 00257 000413 DG8. .   267.                  ;DIAGNOSTICS 8.
35 00260 000414 IN:      268.                  ;SHIFTING FREQ.
36 00261 000454 MNS:     300.                  ;MODE NOT SET.
37 00262 000455 CT.      301.                  ;CRT OR TBL MODE.  1=TBL.
38 00263 000456 ARC:     302.                  ;ARC MODE SET = 1.
39 00264 000003 MS:      003.                  ;MODE SET.
40 00265 000460 CNTR.    304.                  ;CNTR MODE SET = 1.
41 00266 000461 EOB. :   305.                  ;END OF BUFFER.
42 00267 000462 DLMR. :  306.                  ;DELIMITER.
43 00270 000463 CNTR. :  307.
44 00271 000464 CAD.     308.                  ;CLK ACC/DEC.
45 00272 000465 CLDIR.   309.                  ;CLK DIRECTION.
46 00273 000466 SWO. .   310.                  ;SINGLE WORD OUT.
47 00274 000467 MRST. :  311.                  ;MICRO COMPUTER RST.  LOGICAL "OR" OF
48                                              ;IORST, ORST AND DLMR.
49 00275 000470 SWD0:    312.                  ;SINGLE WORD F/F  (0).
50 00276 000502 DCHR. :  322
51 00277 000505 COMP:    325.                  ;COMPLETION.  INDICATES THAT A WORD OVER
52                                              ;SUPERVISORY CHANNEL IS SENT OUT.
53 00300 000506 NVL. :   326.                  ;NON VECTORING LOGIC.
54 00301 000510 MTKE :   328.                  ;MC TAKE.
   00302 000035 CODN@.   029.                  ;CLK OUTPUT DONE
   00303 000512 SWD1:    330.                  ;SINGLE WORD (1).
57 00304 000513 OMSKO:   331.                  ;OUTPUT MSKO OUT.
58 00305 000514 XCLK.    332                   ;XMIT CLK.
59 00306 000533 ORST:    347.
```

```
0005  .MAIN
 1 00307 000540 COMP.:   352.
 2 00310 000541 TBL.:    353.
 3 00311 000542 TBL.     354.
 4 00312 000543 PU1:     355.     ;PULL UP #1.
 5 00313 000544 PU2:     356.
 6 00314 000545 PU3:     357.
 7 00315 000546 PU4.     358.
 8 00316 000633 ICROM:   411.     ;INTERACTIVE CONTROLLER'S PROM IS ENABLED.
 9 00317 000700 VCC.     448.     ;-534,543,645-697,750-788,1078,1080,1082.
10 00320 001035 IMSKO:   541.     ;INPUT MASKED OUT.
11 00321 001114 C0:      588.     ;LSB OF VELOCITY CNTR IN ACC/DEC.
12 00322 001115 C1:      589.
13 00323 001116 C2:      590.
14 00324 001117 C3.      591
15 00325 001120 C4:      592.
16 00326 001121 C5:      593.
17 00327 000547 GND.     359.     ;-410,412-447,544,594-644,789-825,1077,1079,
18                                ;1081,1083.
19 00330 001515 CTMP.:   845.     ;CLK TMP.
20 00331 001516 TMC.:    846.     ;TEMP MUX CONTROL.
21 00332 001517 TMP00:   847.
22 00333 001520 TMP01.   848.     ;MSB OF TEMPORARY STORAGE REG
23                                ;IN MICRO COMPUTER.
24 00334 001521 TMP02.   849.
25 00335 001522 TMP03:   850.
26 00336 001523 TMP04:   851
27 00337 001524 TMP05:   852.
28 00340 001525 TMP06:   853.
29 00341 001526 TMP07:   854.
30 00342 001527 TMP08:   855.
31 00343 001530 TMP09:   856.
32 00344 001531 TMP10:   857.
33 00345 001532 TMP11.   858.
34 00346 001533 TMP12:   859.
35 00347 001534 TMP13:   860.
36 00350 001535 TMP14:   861.
37 00351 001536 TMP15.   862.
38 00352 001537 RAM00:   863.     ;MSB OF RAM STORAGE IN MICRO COMPUTER.
39 00353 001540 RAM01:   864.
40 00354 001541 RAM02:   865.
41 00355 001542 RAM03:   866.
42 00356 001543 RAM04:   867.
43 00357 001544 RAM05:   868.
44 00360 001545 RAM06:   869.
45 00361 001546 RAM07:   870.
46 00362 001550 RAM09:   872.
47 00363 001551 RAM10:   873.
48 00364 001552 RAM11.   874.
49 00365 001553 RAM12:   875.
50 00366 001554 RAM13:   876.
51 00367 001555 RAM14:   877.
52 00370 001556 RAM15.   878.
53 00371 001557 TMC:     879.     ;TEMP MULTIPLEXER CONTROL.
54 00372 001560 A0:      880.     ;OUTPUT OF PROM-A.  INDICATES ADDRESS OF OP
 ;                               ;CODE.
55 00373 001561 A1:      881.
57 00374 001562 A2:      882.
58 00375 001563 A3:      883.
59 00376 001564 RWRM1.   884.     ;R/W RAM.   MC STORAGE.
```

```
 0006  .MAIN
  00377 001565 OCRY:    885.      ;CARRY OUTPUT FROM ALU.
02 00400 001566 M:      886.      ;MODE CONTROL FOR ALU.  SEE TI 74181.
03 00401 001567 S0:     887.      ;OP CODE BIT FOR ALU.  SEE TI 74181.
04 00402 001570 S1:     888.
05 00403 001571 S2:     889.
06 00404 001572 S3:     890.
07 00405 001573 CIN.    891.      ;CARRY IN.  CARRY FROM PROM.
08 00406 001574 ALU00:  892.      ;ALU OUTPUT 00.  (MSB).
09 00407 001575 ALU01:  893.
10 00410 001576 ALU02:  894.
11 00411 001577 ALU03:  895.
12 00412 001600 ALU04:  896.
13 00413 001601 ALU05.  897.
14 00414 001602 ALU06.  898.
15 00415 001603 ALU07:  899.
16 00416 001604 ALU08.  900.
17 00417 001605 ALU09:  901.
18 00420 001606 ALU10:  902.
19 00421 001607 ALU11:  903.
20 00422 001610 ALU12:  904.
21 00423 001611 ALU13.  905.
22 00424 001612 ALU14:  906.
23 00425 001613 ALU15.  907.      ;ALU OUTPUT 15.  (LSB).
24 00426 001614 E0.E3:  908.      ;EQUALITY.  ALU'S OUTPUT.
25 00427 001615 SRST. .  909.     ;RST SKIP CONDITION.
26 00430 001616 RDL.    910.      ;READ LATCH.
27 00431 001617 TRAP. :  911.
28 00432 001620 XMRT. :  912      ;XZ AND MRST.
29 00433 001621 XZ. :    913.
30 00434 001622 RDCO. :  914.     ;DATA CHANNEL OUT DUE TO READ.
31 00435 001623 EMPL. :  915.     ;EXAMINE PULSE FROM FRONT PANEL.
32 00436 001624 ARAC:    916.     ;ADV.  ROM ADDR.  COUNTER.
33 00437 001625 PRCD. .  917.     ;PROCEED.
34 00440 001626 SMC. :   918.     ;STOP MC.
35 00441 001627 RD. :    919.     ;READ INST.
36 00442 001630 PL. :    920.     ;PULSE INST.
37 00443 001631 RSRT. .  921.     ;RESTART INST.
38 00444 001632 DE17. :  922.     ;DEC LOC 17 IN RAM.
39 00445 001633 RNSTP:   923.     ;RUN-STOP.
40 00446 001634 DXPL. :  924.     ;PULSE FROM FRONT AFTER EXAMINE PULSE.
41 00447 001635 RNPL. .  925.     ;RUN PULSE.  OCCURS WHEN SWITCHING FROM
42                                ;STOP TO RUN.
43 00450 001636 EXPL. :  926.     ;EXAMINE PULSE.
44 00451 001637 INPL. :  927.     ;INTERNAL PULSE
45 00452 001640 RMRT. .  928.     ;RESET MC OR READ INST.
46 00453 001642 I.       930.     ;INHIBIT STORAGE IN TEMP.
47 00454 001643 ST:      931.     ;STORE IN RAM.
48 00455 001644 XCLR. :  932.     ;CLR XZ AND XY STORAGE.
49 00456 001645 XX. .    933.     ;PULSE WHICH PUTS THE PROGRAM BACK IN LOOP
50                                ;AFTER PULSE TO IA VIA ALGORITHM.
51 00457 001646 END0. :  934.
52 00460 001647 XY. :    935.     ;PULSE WHICH PUTS THE PROGRAM BACK IN LOOP
53                                ;AFTER PULSE TO IA VIA PULSE INST.
 1 00461 001650 CSRP. :  936.     ;CLOSURE PULSE.
   00462 001651 EJMP. :  937.     ;EFFECTIVE JUMP.  JUMP INST OR CONDT.  JUMP.
 3 00463 001652 MCS. .   938.
57 00464 001653 RACL. :  939.     ;ROM ADDR.  COUNTER LOADED.
58 00465 001654 RWRM0:   940.
59 00466 001655 JUMP:    941.
```

```
 0007   .MAIN
  1 00467 001656 DE17:    942.      ;DEC LOCATION 17 IN MC RAM.
 02 00470 001657 SKIP.:   943.
 03 00471 001660 STRT.:   944.      ;START.  BEGINNING OF NEW INST.  MRST OR P0.
 04 00472 001661 DE.:     945.      ;DECREMENT.  MC INSTR.
 05 00473 001662 W:       946.      ;DIRECTION OF CIRCLE.
 06 00474 001663 P2.      947.
 07 00475 001664 P7:      948.
 08 00476 001665 P9:      949.
 09 00477 001666 XS.      950.      ;X START.
 10 00500 001667 YS:      951.      ;Y START.
 11 00501 001670 FS:      952.
 12 00502 001671 SDEC:    953.      ;START DECEL.
 13 00503 001672 XE.      954.      ;X END.
 14 00504 001673 YE:      955.      ;Y END.
 15 00505 001674 CMS:     956.
 16 00506 001675 CF.      957.
 17 00507 001676 XS. .    958.      ;X START.
 18 00510 001677 YS. :    959.      ;Y START.
 19 00511 001700 FS. :    960.
 20 00512 001712 W. :     970.
 21 00513 001713 LXY.     971.
 22 00514 001714 CXY.     972.
 23 00515 001715 CA:      973.
 24 00516 001716 LA:      974.
 25 00517 001717 GXY. :   975.
 26 00520 001720 ARC. :   976.
 27 00521 001722 IOMHZ:   978.      ;10MHZ CLK.
 28 00522 001753 P0. :    1003.     ;PHASE 0.
 29 00523 001754 P1. :    1004.
 30 00524 001755 P2. :    1005.
 31 00525 001756 P3. :    1006.
 32 00526 001757 P4. :    1007.
 33 00527 001760 P5. :    1008.
 34 00530 001761 P6. .    1009.
 35 00531 001762 P7. .    1010.
 36 00532 001763 P8. :    1011.
 37 00533 001764 P9. .    1012.     ;PHASE 9.
 38 00534 001765 PLL1:    1013.     ;PULSE LATCH (1).
 39 00535 001766 DE17P:   1014.     ;DEC LOCATION 17 OR PULSE INSTRUCTION.
 40 00536 001767 DE17L:   1015.     ;DEC LOCATION 17 LATCH.
 41 00537 002000 RIAD:    1024.     ;RUN INHIBIT ACC/DEC.
 42 00540 002001 DG14. :  1025.     ;DIAG. 14.
 43 00541 002002 CF. :    1026.     ;SIGNAL FROM MC WHICH PRECEDES RAMP DWN
 44                                  ;COMMAND.
 45 00542 002003 ERST. :  1027.     ;END INST OR MRST.
 46 00543 002004 DG13. :  1028.
 47 00544 002005 SDEC. :  1029.     ;START DECEL.  COMMAND FROM MC TO ACC/DEC
 48                                  ;LOGIC TO START RAMP DWN.
 49 00545 002006 SAD:     1030.     ;START ACC/DEC LOGIC (DEC LOC 17 AND TBL).
 50 00546 002007 DG15. :  1031.
 51 00547 002010 DN:      1032.     ;DWN.  ACC/DEC IS RAMPING DWN.
 52 00550 002011 UP:      1033.
 53 00551 002012 TO:      1034.     ;TIMER OVERFLOW ACC/DEC LOGIC.
  4 00552 002013 STPV. :  1035.     ;STOP VELOCITY COUNTER.
  5 00553 002014 ERST:    1036.     ;END INST OR MRST.
 56 00554 002015 TSL.     1037.     ;TOP SPEED LIMIT.  OUTPUT OF ACC/DEC LOGIC.
 57 00555 002016 TICK:    1038.     ;ACC/DEC OUTPUT.
 58 00556 002020 SLCTA.   1040.     ;SELECT A.
 59 00557 002021 SLCTB:   1041.     ;SELECT B.
```

```
 0008  .MAIN
 1 00560 002023 CLKRS.   1043.    ;CLK ROM STORAGE.  USED TO STORE A & C PROMS
 2                                ;OUTPUT.
 3 00561 002024 GA:      1044.
 4 00562 002025 GXY:     1045.
 5 00563 002026 RAC0.    1046.    ;ROM ADDRESS COUNTER BIT 0 (MSB).
 6 00564 002027 RAC1.    1047.
 7 00565 002030 RAC2:    1048.
 8 00566 002031 RAC3:    1049.
 9 00567 002032 RAC4:    1050.
10 00570 002033 RAC5:    1051.
11 00571 002034 RAC6:    1052.
12 00572 002035 RAC7:    1053.
13 00573 002036 LRAC.:   1054.    ;LOAD ROM ADDR.  COUNTER.
14 00574 002040 CTMP:    1056.    ;CLK TEMP STORAGE.
15 00575 002041 PLOUT:   1057.    ;PULSE OUT.
16 00576 002042 CSRL1:   1058.    ;CLOSURE LATCH.
17 00577 002043 CSRL0:   1059.
18 00600 002050 NTJ. .   1064.    ;NEGATIVE TEST OR JUMP.
19 00601 002051 EO.      1065.
20 00602 002052 CARRY.   1066.
21 00603 002053 PU9:     1067.    ;PULL UP 9 VALID ON W.L.  REV D & UP.
22 00604 002054 PU10.    1068.    ;PULL UP 10 VALID ON W.L.  REV D & UP.
23 00605 002055 PU11:    1069.    ;PULL UP 11 VALID ON W.L.  REV D & UP.
24 00606 002056 PU12.    1070.    ;PULL UP 12 VALID ON W.L.  REV D & UP.
25 00607 002057 DBL. :   1071.
26 00610 002060 HALT. .  1072.    ;HALT INST.  IN MICRO COMPUTER.  USED FOR
27                                ;DIAG.  ONLY.
28 00611 002061 PU5.     1073.
29 00612 002062 PU6:     1074.
30 00613 002063 PU7.     1075.
31 00614 002064 PU8.     1076.
32 00615 002074 PO.      1084.
33 00616 002075 RLP0:    1085.    ;READ LATCH AND P0.  SIGNAL WHICH GEN DATA
34                                ;CHANNEL SYNC WHEN MC NEEDS DATA.
35 00617 002076 MRP1. :  1086.    ;MRST AND PHASE 1.
36                       .END
```

0009 . MAIN

A0	000372	5/54
A1	000373	5/56
A2	000374	5/57
A3	000375	5/58
ALU00	000406	6/08
ALU01	000407	6/09
ALU02	000410	6/10
ALU03	000411	6/11
ALU04	000412	6/12
ALU05	000413	6/13
ALU06	000414	6/14
ALU07	000415	6/15
ALU08	000416	6/16
ALU09	000417	6/17
ALU10	000420	6/18
ALU11	000421	6/19
ALU12	000422	6/20
ALU13	000423	6/21
ALU14	000424	6/22
ALU15	000425	6/23
ARAC	000436	6/32
ARC	000263	4/38
ARC.	000520	7/26
BDCHA	000147	3/01
BINTA	000023	1/24
BMSKO	000146	2/59
BROEN	000145	2/58
C0	000321	5/11
C1	000322	5/12
C2	000323	5/13
C3	000324	5/14
C4	000325	5/15
C5	000326	5/16
CA	000515	7/23
CAC00	000056	1/54
CAC01	000057	1/55
CAC02	000060	1/56
CAC03	000061	1/57
CAC04	000062	1/58
CAC05	000063	1/59
CAC06	000064	2/01
CAC07	000065	2/02
CAC08	000066	2/03
CAC09	000067	2/04
CAC10	000070	2/05
CAC11	000071	2/06
CAC12	000072	2/07
CAC13	000073	2/08
CAC14	000074	2/09
CAC15	000075	2/10
CAD	000271	4/44
CARRY	000602	8/20
CF	000506	7/16
CF.	000541	7/43
CIB	000176	3/26
CIDNE	000213	3/40
CIN	000405	6/07
CLDIR	000272	4/45
CLKRS	000560	8/01

.LR	000124	2/35
CMS	000505	7/15
CNTR	000265	4/40
CNTR.	000270	4/43
CODN	000302	4/55
COMP	000277	4/51
COMP.	000307	5/01
CSRL0	000577	8/17
CSRL1	000576	8/16
CSRP.	000461	6/54
CT	000262	4/37
CTMP	000574	8/14
CTMP.	000330	5/19
CXY	000514	7/22
DATIA	000125	2/36
DATIB	000126	2/38
DATOA	000127	2/40
DATOB	000130	2/42
DATOC	000131	2/44
DBL.	000607	8/25
DC11	000052	1/50
DC12	000053	1/51
DC13	000054	1/52
DC14	000055	1/53
DCHA.	000120	2/29
DCHO	000134	2/49
DCHR0	000166	3/16
DCHR.	000276	4/50
DCHS1	000167	3/17
DCPI	000170	3/18
DCPI.	000133	2/47
DCPO.	000144	2/57
DE17	000467	7/01
DE17L	000536	7/40
DE17P	000535	7/39
DE17.	000444	6/38
DE.	000472	7/04
DG10.	000255	4/32
DG11.	000214	3/41
DG13.	000543	7/46
DG14.	000540	7/42
DG15.	000546	7/50
DG8.	000257	4/34
DG9.	000256	4/33
DGNS.	000212	3/39
DI00	000076	2/11
DI01	000077	2/12
DI02	000100	2/13
DI03	000101	2/14
DI04	000102	2/15
DI05	000103	2/16
DI06	000104	2/17
DI07	000105	2/18
DI08	000106	2/19
DI09	000107	2/20
DI10	000110	2/21
DI11	000111	2/22
DI12	000112	2/23
DI13	000113	2/24

DI14	000114	2/25
DI15	000115	2/26
DIDC	000173	3/22
DLMR.	000267	4/42
DN	000547	7/51
D000	000032	1/33
D001	000033	1/35
D002	000034	1/36
D003	000035	1/37
D004	000036	1/38
D005	000037	1/39
D006	000040	1/40
D007	000041	1/41
D008	000042	1/42
D009	000043	1/43
D010	000044	1/44
D011	000045	1/45
D012	000046	1/46
D013	000047	1/47
D014	000050	1/48
D015	000051	1/49
DODC	000174	3/23
DS0	000135	2/50
DS1	000136	2/51
DS2	000137	2/52
DS3	000140	2/53
DS4	000141	2/54
DS5	000142	2/55
DXPL.	000446	6/40
E0. E3	000426	6/24
EJMP.	000462	6/55
EMPL.	000435	6/31
END0.	000457	6/51
EOB.	000266	4/41
EQ	000601	8/19
ERST	000553	7/55
ERST.	000542	7/45
EXPL.	000450	6/43
FS	000501	7/11
FS.	000511	7/19
GA	000561	8/03
GIDC	000001	1/06
GND	000327	5/17
GODC	000000	1/05
GRST.	000151	3/03
GXY	000562	8/04
GXY.	000517	7/25
HALT.	000610	8/26
I	000453	6/46
I0MHZ	000254	4/31
I0X	000207	3/36
IABY.	000253	4/30
IBA0	000203	3/32
IBA1	000204	3/33
IBA2	000205	3/34
ICBY	000252	4/28
ICBY.	000251	4/26
ICDT	000250	4/24
ICDT.	000247	4/22

ICLR.	000156	3/08
ICROM	000316	5/08
IDNE0	000210	3/37
IDNE1	000216	3/44
IIR0	000164	3/14
IIR1	000026	1/27
IMSKO	000320	5/10
INPL.	000451	6/44
INTAX	000121	2/31
INTR.	000220	3/46
IOMHZ	000521	7/27
IORT	000122	2/33
IPI	000025	1/26
IPI.	000132	2/46
IPO.	000143	2/56
IRST	000152	3/04
IRST.	000153	3/05
IX	000260	4/35
JUMP	000466	6/59
LA	000516	7/24
LEAD0	000206	3/35
LRAC.	000573	8/13
LXY	000513	7/21
M	000400	6/02
MC5.	000463	6/56
MDCO	000172	3/21
MDCO.	000171	3/20
MDIA	000031	1/32
MDIA.	000160	3/10
MDIB.	000027	1/28
MDOA.	000161	3/11
MDOB.	000162	3/12
MDOC	000163	3/13
MNS	000261	4/36
MON.	000030	1/30
MRP1.	000617	8/35
MRST.	000274	4/47
MS	000264	4/39
MSKO.	000117	2/28
MTKE.	000301	4/54
NB00.	000021	1/22
NB01.	000020	1/21
NB02.	000017	1/20
NB03.	000016	1/19
NB04.	000015	1/18
NB05.	000014	1/17
NB06.	000013	1/16
NB07.	000012	1/15
NB08.	000011	1/14
NB09.	000010	1/13
NB10.	000007	1/12
NB11.	000006	1/11
NB12.	000005	1/10
NB13.	000004	1/09
NB14.	000003	1/08
NB15.	000002	1/07
NTJ.	000600	8/18
NVL.	000300	4/53
OBSY1	000223	3/49

0013 . MAIN

OCLR.	000157	3/09
OCRY	000377	6/01
ODNE1	000222	3/48
OIPI	000022	1/23
OIR0	000165	3/15
OIR1	000024	1/25
OMSKO	000304	4/57
ORST	000306	4/59
ORST.	000150	3/02
OSRT	000155	3/07
OSRT.	000154	3/06
P1.	000523	7/29
P2	000474	7/06
P2.	000524	7/30
P3.	000525	7/31
P4.	000526	7/32
P5.	000527	7/33
P6.	000530	7/34
P7	000475	7/07
P7.	000531	7/35
P8.	000532	7/36
P9	000476	7/08
P9.	000533	7/37
PLL1	000534	7/38
PLOUT	000575	8/15
PL	000442	6/36
PO	000615	8/32
PQ.	000522	7/28
PROD.	000437	6/33
PU1.	000312	5/04
PU1.0	000604	8/22
PU1.1	000605	8/23
PU1.2	000606	8/24
PU	000313	5/05
PU	000314	5/06
PU	000315	5/07
PU5	000611	8/28
PU6	000612	8/29
PU7	000613	8/30
PU8	000614	8/31
PU9	000603	8/21
RAC0	000563	8/05
RAC1	000564	8/06
RAC2	000565	8/07
RAC3	000566	8/08
RAC4	000567	8/09
RAC5	000570	8/10
RAC6	000571	8/11
RAC7	000572	8/12
RACL.	000464	6/57
RAM00	000352	5/38
RAM01	000353	5/39
RAM02	000354	5/40
RAM03	000355	5/41
RAM04	000356	5/42
RAM05	000357	5/43
RAM06	000360	5/44
RAM07	000361	5/45
RAM09	000362	5/46