44689039

CENTRONICS®
data computer corp.
LINE PRINTER DIVISION

LINEWRITER 400

INTRODUCTION
MAJOR PRINTER ASSEMBLIES
PRINTER OPERATION AND OPERATING PROCEDURES
INPUT POWER BOARD - AC/DC DISTRIBUTION
PERSONALITY MODULE
CPU AND PRINT HEAD ELECTRONICS BOARD
VERTICAL AND HORIZONTAL SYSTEM
BAND AND RIBBON SYSTEMS
HAMMER DRIVER BOARD AND HAMMER MODULE ASSEMBLIES
FAULT ISOLATION AND SYSTEMS SAFETY
LOGIC SCHEMATICS

TECHNICAL MANUAL

REVISION RECORD

REVISION	DESCRIPTION
01 DEC., 82	Pre-release of the Linewriter 400 Technical Manual
02 MAY., 83	Revised to incorporate miscellaneous changes.
03 SEPT. 83	Revised to add Section XI.

PUBLICATION NO.		IDENTIFICATION NO.
44689039		

Revision Procedure:

The revision record page is revised for each revision package to reflect the revision sequence: (Pre-Release) Rev. 01,02 etc, (Release) Rev. A, Rev. B. Rev. C, etc. The revision record page also provides a brief description of each change. A manual update revision package will be available for manuals after the Release revision of the manual. Each page revised in an update revision package will have the month and year printed in the lower right hand corner. This same date would appear in the revision column above, just below the revision identification. An Instruction Sheet cover is with each revision package, explaining page removal and insertion and reason for the change. The instruction sheets for revision packages are then to be placed at the back of the manual as a record of the change.

PREFACE

This manual contains technical information for the Linewriter 400 printer.

WARNING This equipment generates, uses and can radiate radio frequency energy and if not installed and used in accordance with the instructions manual, may cause interference to radio communication. It has been tested and found to comply with the limits for a Class A peripheral computing device pursuant to Subpart J of Part 15 of the FCC Rules which are designed to provide resonable protection against such interference when operated in a commercial environment. Operation of this equipment in a residential area is likely to cause interference in which case the user, at his own expense, will be required to take whatever measures may be required to correct the interference.

TABLE OF CONTENTS

SECTION		PAGE
I	INTRODUCTION	1-1
II	MAJOR PRINTER ASSEMBLIES	2-1
	CONTROL PANEL	2-2
	Control Panel Switches and Indicators (accessible with the bonnet closed)	2-3
	Control Panel Switches (accessible with the bonnet open)	2-4
	GATE ASSEMBLY	2-5
	Print Band Drive System	2-5
	Ribbon Drive System	2-5
	Optional EVFU Tape Drive	2-5
	PRINT HEAD STRUCTURE	2-5
	Hammer Bank	2-5
	Horizontal Shift Mechanism	2-5
	Vertical Drive Mechansim	2-5
	Forms Sensing	2-5
	PRINTED CIRCUIT BOARDS	2-6
	Input Power Board (1PC6)	2-6
	Personality Module (1PC1)	2-6
	CPU Board (1PC1)	2-6
	Print Head Electronics Board (1PC3)	2-6
	Hammer Driver Board (1PC4)	2-6
III	PRINTER OPERATION AND OPERATING PROCEDURES	3-1
	PRINT BANDS	3-1
	Statistical Band Option	3-1
	COLUMN CAPACITY	3-2
	PAPER ADVANCE TIMING	3-2
	VERTICAL MOTION FORMATTING	3-2
	FLC (Forms Length Select) Switches	3-2
	12 Channel Electronic Vertrical Format	3-2
	Paper Motion Commands and Control Codes	3-10
	I/O Selectable 6/8 LPI	3-10
	OPERATOR CORRECTABLE FAULTS	3-10
	C.E. CORRECTABLE FAULTS	3-10
	STATUS DISPLAYS	3-10
	TEST PRINT FEATURES	3-13
IV	INPUT POWER BOARD + AC/DC DISTRIBUTION	4-1
	INPUT POWER	4-1
	AC Output	4-1
	DC Output	4-1

(Continued)

TABLE OF CONTENTS (Cont'd)

SECTION		PAGE
V	PERSONALITY MODULE	5-1
	DATA PRODUCTS COMPATIBLE PERSONALITY MODULE	5-1
	Switches	5-1
	INTERFACE CHARACTERISTICS	5-2
	Transmitter/Receiver	5-2
	INTERFACE SIGNALS	5-5
	Ready	5-5
	On Line	5-5
	Demand	5-5
	Data Strobe	5-5
	Data 1 thru 8 and Paper Instruction	5-5
	Ident 0 and Ident 1	5-5
	-Buffer Clear	5-5
	Bottom of Forms (BOF)	5-5
	Top of Forms (TOF)	5-5
	VFU RDY	5-6
	Interface Verify	5-6
	EVFU Installed and EVFU Verify	5-6
	DATA INTERCHANGE TECHNIQUE	5-8
	Print Data for a Line of Print	5-8
	Forms Motion Commands	5-8
	EVFU Load Errors	5-8
	INTERFACE CONNECTORS	5-12
	Standard Interface Connector	5-12
	Optional Interface Connector	5-12
VI	CPU AND PRINT HEAD ELECTRONCS BOARDS	6-1
	CPU BOARD FUNCTIONS	6-1
	PRINT HEAD BOARD FUNCTIONS	6-1
	CPU BOARD	6-5
	Port 5 (I/O and Scratch Pad RAM)	6-5
	Port 3 (Bus Control Signal and Timers)	6-5
	CPU LED's	6-5
	Switches	6-5
	C.E. Diagnostic Routines	6-6
VII	VERTICAL AND HORIZONTAL SYSTEMS	7-1
	CONTROL SIGNALS (from CPU Board)	7-1
	Software of Port 2	7-1
	Port 1	7-1
	Port 4	7-1
	STEPPER MOTORS	7-1
	DRIVE SIGNALS (From Print Head Electronics Board)	7-2
VIII	BAND AND RIBBON SYSTEMS	8-1
	PRINT BAND CONTROL	8-1
	RIBBON CONTROL	8-1

(Continued)

TABLE OF CONTENTS (Cont'd)

SECTION		PAGE
IX	HAMMER DRIVER BOARD AND HAMMER MODULE ASSEMBLIES	9-1
	PRINT HAMMER SYSTEM	9-1
	HAMMER DRIVER BOARD	9-6
	HAMMER FIRING	9-9
X	FAULT ISOLATION AND SYSTEMS SAFETY	10-1
	SYSTEMS SAFETY	10-1
	Hazardous Voltages and Mechanisms	10-1
	Handling of MOS Components	10-1
	Reconnecting Ground Straps After Servicing	10-2
	FAULT ISOLATION	10-2
XI	LOGIC SCHEMATICS	11-1
	SIGNAL INDEX AND MODULAR LOGIC INTRODUCTION	11-1
	Figure 11-1	11-1
	Figure 11-2	11-2
	Figure 11-3	11-3
	GENERAL NOTES	11-4
	PRINTER SCHEMATICS	11-5
	Backplane PCB Assembly	11-21
	CPU Assembly PCB	11-29
	Print Head Electronics PCB Assembly	11-47
	Hammer Driver PCB Assembly	11-55
	Control Panel PCB Assembly	11-59
	Input Power PCB Assembly	11-63
	I/O ADAPTOR ASSEMBLIES	11-65
	I/O Adaptor - D Type, Short Line	11-67
	I/O Adaptor - Winchester Type, Short Line	11-69
	I/O Adaptor - Centronics	11-71
	I/O Adaptor - RS-232	11-75
	I/O Adaptor - RS-422/RS-423	11-81
	I/O Adaptor - D Type, Long Line	11-87
	I/O Adaptor - Winchester Type, Long Line	11-91
	I/O Adaptor - Series 1	11-94
	PERSONALITY MODULES	11-97
	Data Products Compatible Personality Module	11-99
	RS-232 Personality Module	11-122
	Centronics Personality Module	11-138

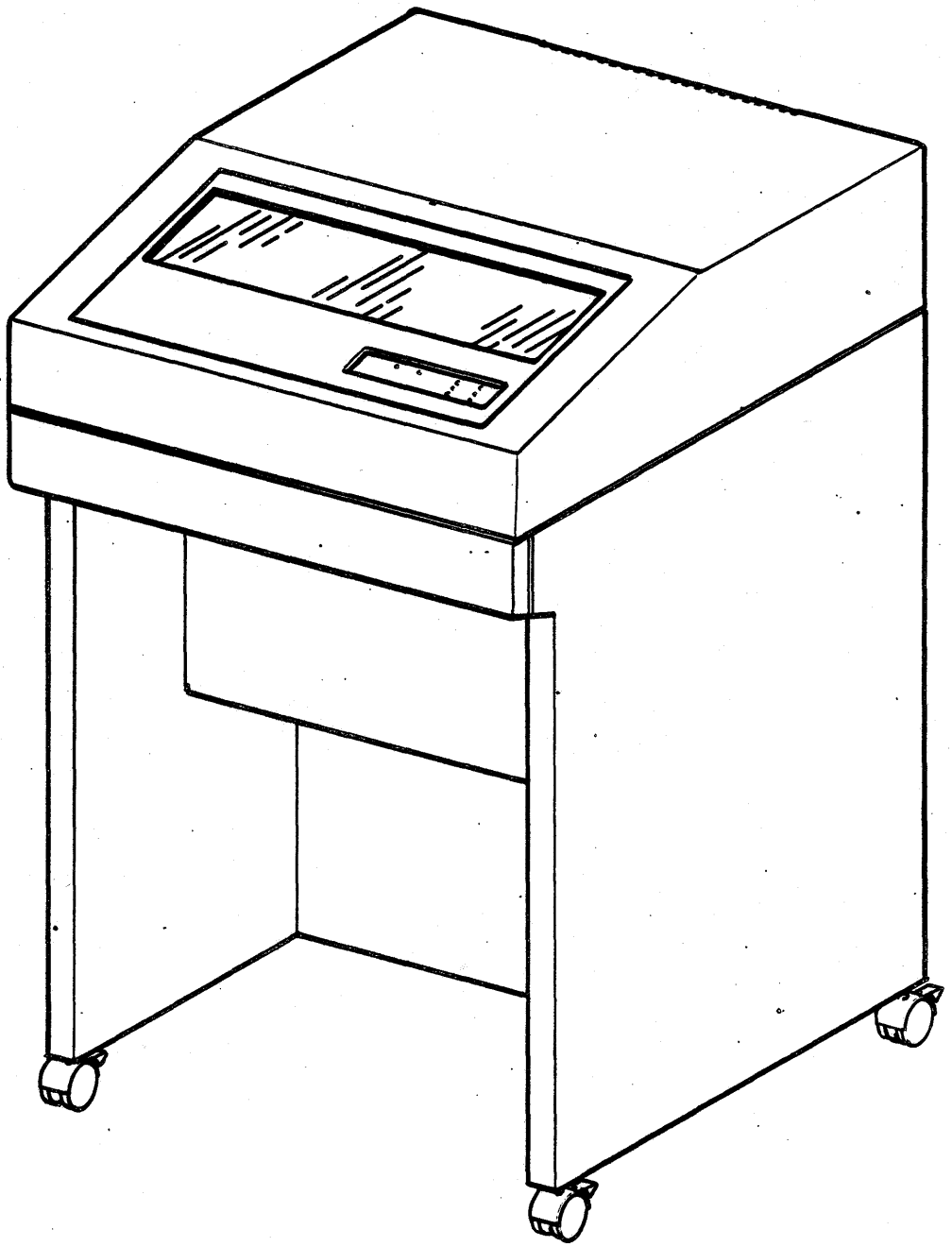

LINEWRITER 400

SECTION I
INTRODUCTION

This printer was designed to be serviced by the customer engineer with a minimum amount of time and effort. All assemblies and their components are easily accessed for removal, replacement and adjustment. There are very few mechanical adjustments and no electrical adjustments. Initially at product release the mean time to repair (MTTR) is 1.0 hour. After 18 months, the MTTR drops to 0.5 hour.

The printer's documentation consists of five manuals:

1. Operator Cards; located in the printer's band cover (beneath the bonnet).
2. Installation and Checkout Instructions; documents factory switch settings, installation and checkout, choosing a location and input power conversions.
3. Maintenance Manual; documents spared parts identification, fault isolation, replacement procedures and adjustment procedures.
4. Parts Identification Manual; identifies every assembly in the printer by description and part number.
5. Technical Manual; This manual documents the principles of operation and logic schematics.

SECTION II
MAJOR PRINTER ASSEMBLIES

This section contains information on major printer assemblies identification and their functions.

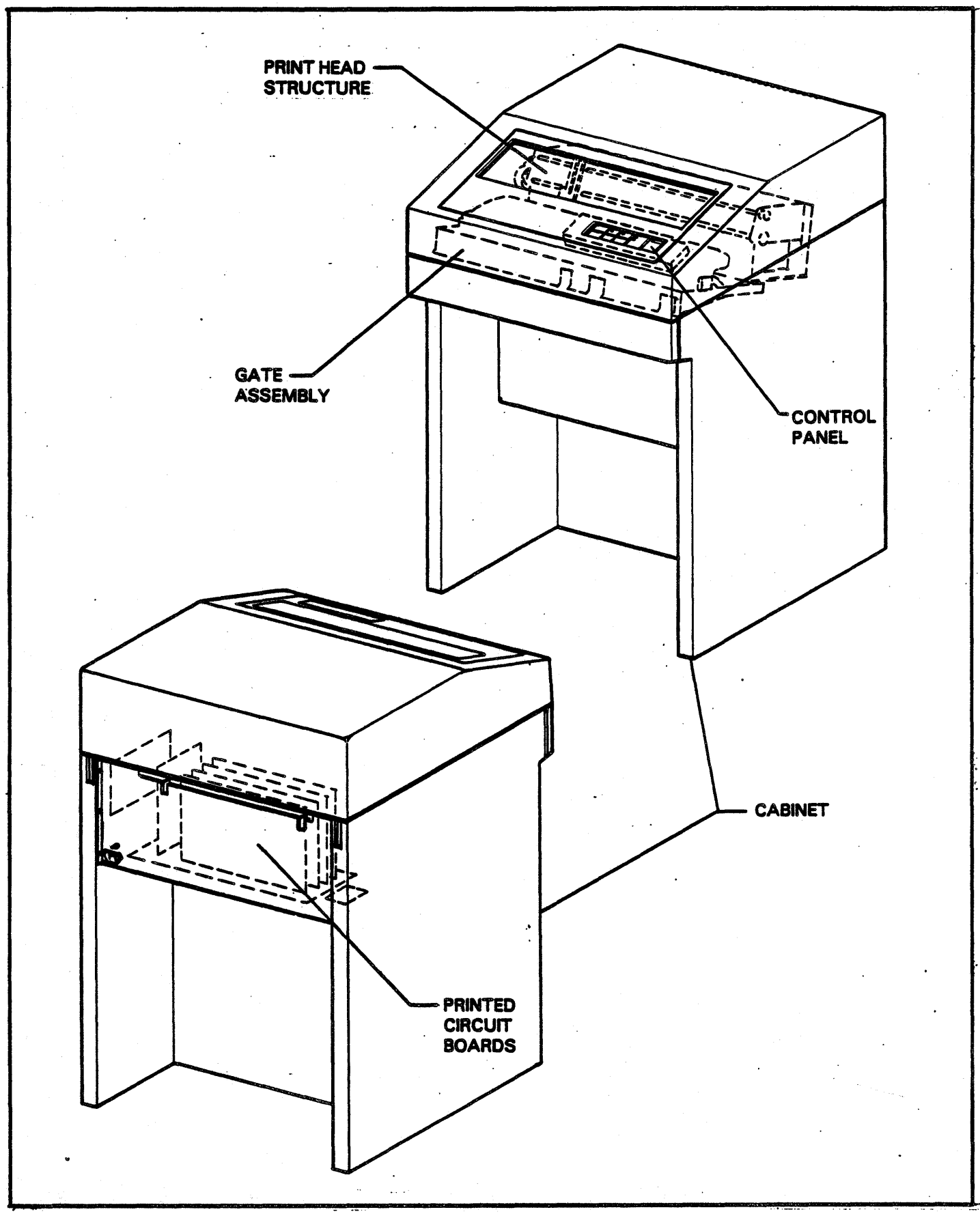

FIGURE 2-1. MAJOR PRINTER ASSEMBLIES

CONTROL PANEL

Control Panel Switches and Indicators (accessible with the bonnet closed)

Start/Stop Switch/Indicator: This is a momentary contact switch indicator. Pressing this switch causes the printer to go RDY if the printer was in the NOT RDY mode and no detectable fault exists. The RDY state is defined as the state in which the printer will respond to On Line operations with the Data Source.

The RDY state will be maintained until the Start/Stop switch is again pressed, or a detectable fault occurs.

Pressing the Start/Stop switch while the printer is printing or moving paper will not inhibit these functions from being completed; however, new data cannot be loaded until the Start/Stop switch is again pressed.

A C.E. Fault causes the printer to go NOT RDY (turns off the START LED). Any one of 4 fatal faults causes the printer to go NOT RDY and to desequence the 36 VDC power supply. To restart, the printer must be powered OFF and then ON. If the fault reoccurs, the printer should be serviced.

Forms Feed Switch: This is a momentary contact switch. Pressing this switch causes the paper motion system to advance to the Top of Forms. This switch is only active when the printer is in the NOT RDY condition.

Test Print Switch/Indicator: A momentary contact switch with an LED indicator which initiates a Test Print pattern internal to the printer. This switch is active when the printer is NOT RDY. The test pattern results from the setting of DIP switches found on the Control Panel and controller board.

Fault Reset Switch: Fault Reset switch is a momentary contact switch which allows the operator to reset or override a number of the correctable faults. Pressing the switch will clear the fault condition and provide a display of FAULT RESET (FRES) while the switch is pressed. This switch will not clear Customer Engineer type faults or some major hardware fault conditions or true operator correctable faults such as Out of Paper. The switch may also be used to reset the Alarm which is activated by a consumable fault (i.e.,Out of Paper, Ribbon, or Forms Error) has been dectected. The alarm consists of a continuous tone, and may be reset by the Fault Reset switch. In the case of a Ribbon or Forms error both the fault and the Alarm are reset. In the case of an Out of Paper, only the Alarm is reset.

Single Space Switch: The Single Space switch is a momentary contact switch which provides a single line paper advance when the gate is closed and a vernier motion of the paper when the gate is open. This switch is only active when the printer is in the OFF LINE condition. If the switch is held in the depressed state for over 0.5 seconds, the forms will increment at a rate of 4 steps per second. This motion will cease once the switch is released.

Single Cycle Switch: The Single Cycle Switch is a momentary contact switch which allows the user to go into the RDY state (allows ON LINE operation) until a single line of data is transmitted and terminated with a paper motion control code. The switch is active when the printer is NOT RDY and no fault conditions have been sensed. The RDY state will not be removed if the line is terminated with a control code that does not result in paper motion (e.g. a Carriage Return (CR) code).

The switch is intended to allow the operator to readily set up paper (especially pre-printed forms) using the actual Data Source output. When sufficient print out to obtain proper set up has been obtained, the printer would be put into the RDY state with the Start/Stop switch.

Power Indicator: A light emitting diode on the main Control Panel that when lit indicates that the ON/OFF switch is on and that the 5 volts is present.

6 LPI Indicator: A light emitting diode which indicates when lit that the vertical pitch is 6 lines per inch. When not lit te vertical pitch is 8 lines per inch. Note, that in the optional EVFU mode the vertical pitch is I/O selectable. If the pitch has been I/O selected, the Control Panel Select Switch is automatically inactive and the pitch selected is displayed by the indicator.

Diagnostic Display: A four digit diagnostic display will indicate the printer internal status and fault conditions.

Control Panel Switches (accessible with the bonnet open)

6/8 Line Switch: The 6/8 line switch is a non-illuminated single pole slide switch mounted above the DIP switches on the Control Panel. Actuation of this switch should occur with the printer in the Stop mode, and should be followed by a Top of Form. Improper spacing may occur if this procedure is not followed. Note, that in the optional EVFU mode, this switch is disabled if the I/O has selected the vertical pitch. See I/O Selectable 6/8 LPI at the end of this section for more information.

Auto Perf Skip Select Switch: An auto perf skip select DIP switch is provided to allow the operator to activate or inactivate the auto perf skip feature. This switch is one of the DIP switches located on the main Control Panel. Note, that the Auto Perf Skip function is automatically disabled if either the EVFU has been loaded, or if the I/O has selected the vertical pitch.

Variable Forms Length Select Switches: This feature allows the selection of the forms length in inches by setting two thumbwheel select switches located on the Control Panel.

Configuration Test Switch: When this switch is selected and once the Test Print switch is pressed, the printer configuration will be printed. This pattern will result in a printout stating the configuration of parameters within the machine (e.g., Compressed/Standard Pitch, 48/64/96 Character Band, etc.)

Note that in order to obtain intelligible printout, an ASCII type band must be used. If a non-ASCII type band or a band with translator ROM's is used, an ASCII band must be temporarily installed in order to obtain the proper printout.

Character Phasing Switch: The Character Phasing switch is a non-illuminated slide switch mounted to the Control Panel. Sliding this switch left or right while printing provides optimum quality print out.

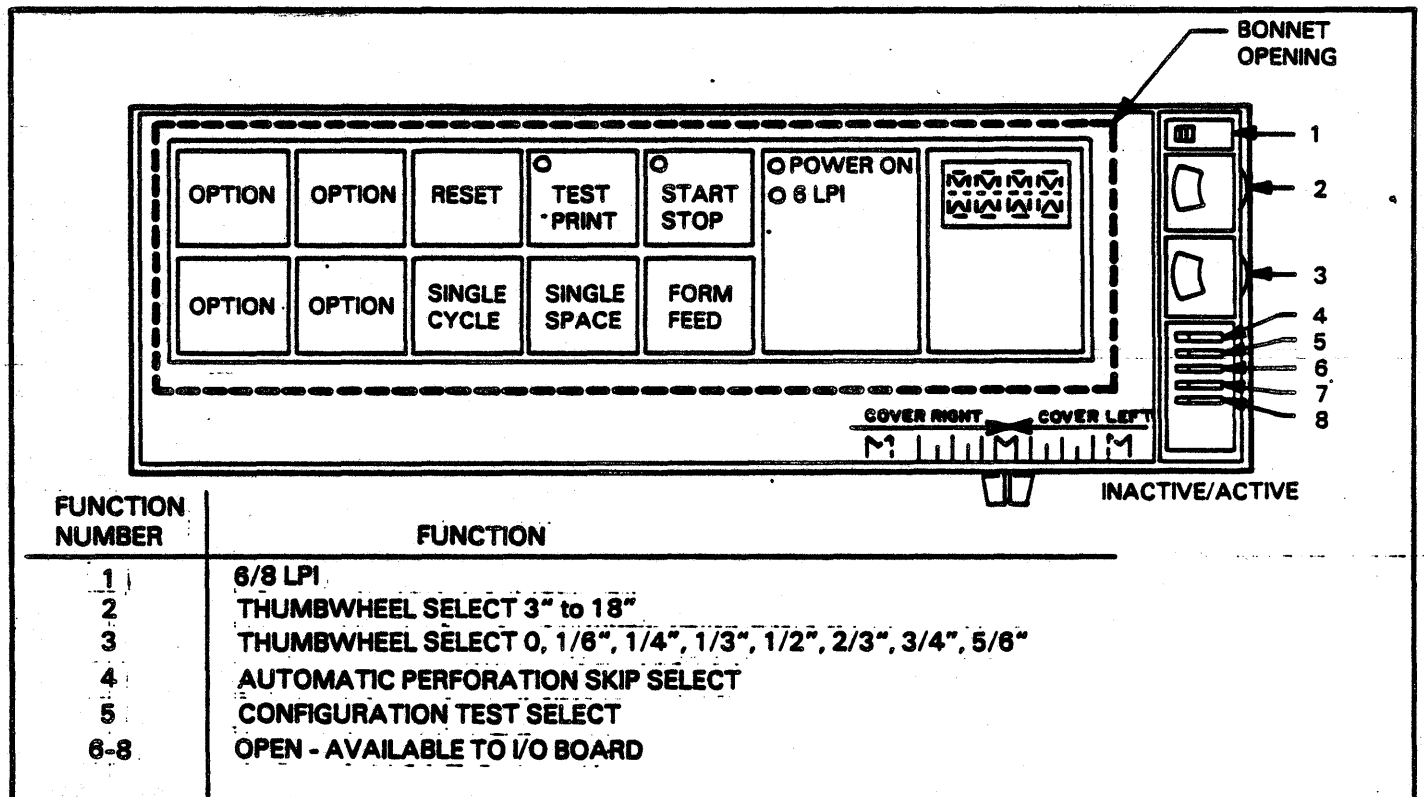

FUNCTION NUMBER	FUNCTION
1	6/8 LPI
2	THUMBWHEEL SELECT 3" to 18"
3	THUMBWHEEL SELECT 0, 1/6", 1/4", 1/3", 1/2", 2/3", 3/4", 5/6"
4	AUTOMATIC PERFORATION SKIP SELECT
5	CONFIGURATION TEST SELECT
6-8	OPEN - AVAILABLE TO I/O BOARD

FIGURE 2-2. CONTROL PANEL

GATE ASSEMBLY

Print Band Drive System

The band drive motor is an AC synchronous motor and the font speed of the print band is 120 inches per second. A unique band drive motor pulley is required for either 50 or 60 Hz operation since the motor is AC synchronous. Both 50 Hz and 60 Hz motor pulleys will be provided with each 50/60 Hz printer. One will be in operation on the motor shaft while the second will be secured to the unit and readily available for a frequency change by the C.E. See the Installation and Checkout Instructions for location of the pulley and input power conversions.

Ribbon Drive System

Ribbon motion is achieved by an AC unidirectional motor which is controlled by the printer. Ribbon motion stops approximately one second after printing to prevent ribbon smear. Ribbon jams within the cassette are minimized by a ribbon resonator which constantly vibrates the ribbon within the cassette. Ribbon motion and presence of ribbon are detected by a sensor which consists of a rotor and hall effect switch. The ribbon cassette, ribbon rollers and ribbon shield are operator changeable and are documented in the operator cards located in the top of the band cover.

Optional EVFU Tape Drive

This option allows loading of vertical formatting instructions by means of a punched tape. The tape travels through a twelve channel LED reader and loads the printer's format buffer. The tape is read one of two ways: If a tape is installed at power-up it is read automatically, if the printer's already powered-up then a tape is installed, the tape will be read once the Load EVFU switch is pressed. The maximum form length allowable is 22 inches at eight lines per inch.

PRINT HEAD STRUCTURE

The print head structure contains three major assemblies; the hammer bank, horizontal shift mechanism and a vertical drive mechanism.

Hammer Bank

The hammer bank consists of 68 hammers and push rods. They are assembled in two rows, one for even columns, one for odd columns. The hammers move in a linear direction. Hammer movement is achieved by sliding push rods. The linear movement of the hammers provides true lower case (clear ascenders and decenders with underscoring ability) print out.

Horizontal Shift Mechanism

The horizontal shift mechanism shifts the hammer module assembly left and right by the use of a stepper motor. In standard pitch the hammer module assembly shifts in two positions in 0.1 inch increments. In compressed pitch the hammer module assembly shifts in three positions in 0.06 inch increments.

A diagnostic routine, "Horizontal Set Up", is available for setting up the horizontal alignment.

Vertical Drive Mechanism

The vertical drive mechanism controls the movement of forms through the tractors by use of a stepper motor. The average slew speed for paper motion for multiple line skips is 15 inches per second. The stepper motor will accomplish a single line forms advance in 30 msec.

Vertical forms advance may be operator selected at either 6 or 8 lines per inch by use of a switch located on the Control Panel. Usage of a special feature, half line feed, via the I/O allows operation at 12 lines per inch.

A diagnostic routine, "Exercise Vertical", is available for testing the vertical advance system. Without EVFU loaded a single line advance will occur when this routine is employed. With EVFU loaded the vertical advance system will advance to each channel selected and provide a print out of the channel selected at that time.

Forms Sensing

Paper Motion Verification: A forms motion sensor is provided that detects a paper jam or tear condition within 24 lines of the fault when printing at either 6 or 8 lines per inch respectively and inhibits further printing. A Forms Error (FRMS) will be displayed, and may be cleared by pressing the Fault Reset switch on the Control Panel.

Paper Out Detection: An Out of Paper (OOP) condition will be detected and displayed by the printer controller when one of the following conditions occur:

1. Power on with no paper in machine.

2. When the printer is printing and the paper out switch detects the absence of paper, the printer will continue to accept data and print until the Bottom of Forms channel is reached. Upon detection of the Bottom of Forms channel, no more data will be accepted, and the printer will be placed in the NOT READY condiiton.

3. If the printer is in the NOT READY mode and the paper out switch detects the absence of paper below the print station.

Any of the above conditions will keep the printer in the NOT READY state until the Out of Paper condition has been removed.

PRINTED CIRCUIT BOARDS

Input Power Board (1PC6)

The input power board provides AC and DC power inputs and outputs to the printer as follows:

a. 100/120V 60 Hz AC in.
b. 100/220/240V 50 HZ AC in. (100/220V Selectable on 1BP1,SW1)
c. 10/25/50 VAC transformer output to the hammer driver board.
d. 120 VAC output to EVFU, blower, band motor and ribbon motor plus one spare output.
e. +10, +25 +50V DC outputs.

Personality Module (1PC1)

The personality module is equipped with the following features:

a. Allows the user to interface with various data source configurations.
b. A basic Controller Bus I/O.
c. Employs a 8048 microprocessor.
d. Employs switches which control line counter/EVFU instructions and translation ROM selection.

CPU Board (1PC2)

The CPU board is controlled by an 8085 microprocessor. An 8048 microprocessor is employed for band and HEP pulses. The board is equipped with feature select switches listed below:

a. Auto Line Feed
b. 132/136 Column
c. FLC (Forms Length Control)
d. IOVFU/TLVFU (I/O Vertical Formatting /Tape Load Vertical Formatting)
e. BOF Channel (Bottom of Form Channel)
f. Perf Length (3,4,5, or 6 line skip over perforations)
g. TOF Select (Slew To/Slew Thru (Top of Form))
h. VT Select (Vertical Tab Select) Channel 3 or 4 of format tape.

This board is also equipped with optional RAM for additional status display.

Print Head Electronics Board (1PC3)

The print head electronics board controls the folowing components:

a. Driver electronics
b. Fault sensing
c. Vertical and horizontal stepper motor drive
d. Character phasing control
e. Home and character pulse synchronization on the print band
f. Print band motor control
g. Houses the +5V regulator circuitry.

Hammer Driver Board (1PC4)

The hammer driver board employs or controls the following components:

a. Shift registers and timers are controlled by gate arrays.
b. 3 amp darlingtons are used to control the timer input signals.
c. Controls the hammer fire timing.
d. Houses the +36V regulator circuitry.

SECTION III
PRINTER OPERATION AND OPERATING PROCEDURES

This section contains information on printer operation, basic operating procedures and built in printer diagnostics.

PRINT BANDS

Print bands are composed of continuous loop, engraved steel and are operator installable. There are 384 characters per band which are grouped into various sets (or fonts). There are two types of bands available, standard pitch or compressed pitch. Both types of bands have character pulse lines beneath each character on the band. Standard pitch print bands have one home pulse timing mark above the beginning of every font, compressed pitch bands have two timing marks above the beginning of every font. Statistical bands can be in standard or compressed pitch and are identified by three or more timing marks. The font speed is 120 inches per second and the maximum hammer repetition rate is 3.5 msec regardless of the band installed. Character sets of 48, 64, 96, 128, or 192 are available.

The printer is equipped with an early end of print detection (EEOP) feature. This is a technique used within the control electronics which senses the completion of printing. For typical text patterns, thruput increases of 15% or more may be realized because of this feature.

Statistical Band Option

With this option fonts may be grouped in an optimized fashion to increase print speed and/or print band life. The electronics will be capable of identifying a maximum of 256 different characters located in any of the 384 available character locations. The speed and/or life increase will be a function of the specific application in conjunction with the print band tailored for it. This option will work with either standard pitch or compressed pitch print bands, and is identified by 3 or more home marks above the characters.

These bands have character arrangements which minimize the number of low usage characters on the band (an example would be in a 64 character set there are 16 characters which are seldomly used) or maximize the number of high usage characters. This option requires the installation of the appropriate band and its corresponding PROM. The statistical band is also automatically sensed by the controller.

NUMBER OF CHARACTERS PER SET	NUMBER OF SETS PER BAND	LINES PER MINUTE VS. CHARACTERS PER INCH (CPI)
48	8	360 at 10 CPI, 240 at 15 CPI
64	6	300 at 10 CPI, 200 at 15 CPI
96	4	225 at 10 CPI
128	3	180 at 10 CPI
192	2	130 at 10 CPI

COLUMN CAPACITY

132 columns (66 hammers) or 136 columns (68 hammers) in standard pitch.

198 columns (66 hammers) or 204 columns (68 hammers) in compressed pitch.

PAPER ADVANCE TIMING

The stepper motor forms advance will accomplish a single line advance in 30 msec (max). The average slew speed for paper motion through multiple line skips is 15 inches per second.

The maximum allowable continuous print rate of the printer is 500 lines per minute. Because of the Statistical Font and Early End of Print features in normal field applications some lines will be printed at a higher speed than 500 lines per minute.

VERTICAL MOTION FORMATTING

There are three types of vertical formatting available; FLC (Forms Length Control) switches on the Control Panel, IOVFU (I/O Loadable Vertical Format) over the interface lines and TLVFU (Tape Loadable Vertical Format) which employs a tape reader and a punched format tape to load vertical format instructions.

FLC (Forms Length Select) Switches

These switches are located on the right side of the Control Panel beneath the bonnet. The top switch allows selection of whole inches from 3 to 18 inches. The bottom switch allows fractional settings of 0, 1/6, 1/4, 1/3, 1/2, 2/3, 3/4 and 5/6 inch. The total form length is the sum of the two switch settings. Before this feature can be used it will be necessary to set switches on the CPU board (1PC2) to the ON position. Refer to the Maintenance Manual (Fault Isolation section) for switch set up.

These switches should be set such that when added together they equal the form length (as measured from perforation to perforation). The printer automatically calculates the number of lines within the page based on the setting of the 6/8 LPI select switch and these switches. Note that the changing of the 6/8 LPI switch in mid page may cause the top of form (TOF) position to become misadjusted. A "PAGE" error will indicate this loss of TOF position on the Control Panel's display. It is recommended that the selection of 6 or 8 LPI occur only at the TOF position.

Perforation Skip Length Select Switches: These switches allow selection of the number of lines skipped over perforations between the bottom and top of forms. These switches select a 3,4,5 or 6 line skip. These are only active in the FLC mode and when the APS switch on the Control Panel is turned on. Before this feature can be used it will be necessary to set switches on the CPU board (1PC2). Refer to the Maintenance Manual (Fault Isolation section) for switch set up.

12 Channel Electronic Vertical Format

This option allows the substitution of the FLC switches on the Control Panel with an electronic data storage capability which allows the user to store a representation of channels or positions along the form which can then be selected by control codes. The channel information is stored in a RAM buffer and is available in an I/O loadable configuration (IOVFU) or a tape loadable version (TLVFU). The tape loadable version provides a 12 channel LED tape reader which loads automatically on power up or upon command from the operator. After loading, the tape drive unit does not move, thereby eliminating any tape or mechanism wear.

The buffer provides storage for up to a 22" form at 8 lines per inch. Selection of 6 or 8 lines per inch may be made by the Control Panel Select switch or via the I/O. The EVFU versions (IOVFU and TLVFU) are selected by the setting of DIP switches within the basic controller when the option feature has been installed. Refer to the Maintenance Manual (Fault Isolation section) for switch set up.

TABLE 3-1 EVFU LOAD FORMAT

EVFU LOAD CONTROL CODES

BIT	7	6	5	4	3	2	1	0	HEX	FUNCTION
	0	1	1	0	1	1	1	1	6F	END OF EVFU DATA (STOP CODE)
	0	1	1	0	1	1	0	0	6C	START OF EVFU DATA - SELECT 6 LPI
	0	1	1	0	1	1	0	1	6D	START OF EVFU DATA - SELECT 8 LPI
	0	1	1	0	1	1	1	0	6E	START OF EVFU DATA

EVFU DATA LOAD FORMAT

BIT								
7	6	5	4	3	2	1	0	
0	1	1	0	1	1	1*	0*	Start Code*
0	0	CH 6	CH 5	CH 4	CH 3	CH 2	CH 1	BYTE 1 — 1ST LINE
0	0	CH 12	CH 11	CH 10	CH 9	CH 8	CH 7	BYTE 2 — 1ST LINE
0	0	CH 6	CH 5	CH4	CH 3	CH 2	CH 1	BYTE 3 — 2ND LINE
0	0	CH 12	CH 11	CH 10	CH 9	CH 8	CH 7	BYTE 4 — 2ND LINE

EVFU BUFFER MEMORY
MAX 288 BYTES**

		CH 12	CH 11	CH 10	CH 9	CH 8	CH 7	
0	1	1	0	1	1	1	1	STOP CODE

* May be one of three start codes:

6E (Hex)	Start of EVFU Load
6C	Start of EVFU Load, Select 6 LPI
6D	Start of EVFU Load, Select 8 LPI

** Some Personality Modules limit the EVFU buffer memory to a max. of 288 bytes.

START/STOP CODE COMBINATION	EVFU	RECIRCULATE POINTER TO TOP OF MEMORY	SET EVFU LOADED	SET/RESET I/O SEL VERT PITCH MODE	SET/RESET -6/+8 LPI VERT PITCH	CHECK FOR 3" ERROR	SET/RESET LINE COUNTER ONLY MODE (2)
STOP CODE ONLY	NOT LOADED			RESET			RESET
	LOADED	✓	(1)				RESET
START/STOP	NOT LOADED			RESET			SET
	LOADED		(1)	RESET			SET
6 LPI START/STOP	NOT LOADED			SET	RESET		
	LOADED		(1)	SET	RESET		
8 LPI START/STOP	NOT LOADED			SET	SET		
	LOADED		(1)	SET	SET		
STD. START/DATA/STOP	NOT LOADED	✓	✓	RESET		✓	
	LOADED	✓	✓	RESET		✓	
6 LPI START/DATA/STOP	NOT LOADED	✓	✓	SET	RESET	✓	
	LOADED	✓	✓	SET	RESET	✓	
8 LPI START/DATA/STOP	NOT LOADED	✓	✓	SET	SET	✓	
	LOAD	✓	✓	SET	SET	✓	

(1) STAYS SET IF EVFU PREVIOUSLY LOADED.

(2) LINE COUNTER MODE ONLY IS ALSO RESET IF EVFU LOAD ERROR OCCURS.

FIGURE 3-1. START/STOP CODE SUMMARY

I/O Loadable Vertical Format Unit (IOVFU): The I/O loadable version of EVFU provides memory storage for up to 176 lines (352 bytes of storage) at 6 or 8 lines per inch. Certain personality modules will limit the total lines to 144 (288 bytes of storage). Each data byte transferred provides 6 channels of vertical format data with channels 1 thru 6 represented by an odd byte, and channels 7 thru 12 represented by an even byte. A format channel selection is represented by a "1" bit in its respective location.

Data in the format buffer is formatted with a start code (6E HEX) followed by EVFU data followed by a stop code (6F HEX). Note, that the standard start code 6E HEX indicates the start of EVFU data while a 6C HEX in the start position indicates start EVFU data and select 6 lines per inch, and a 6D HEX indicates start EVFU data and select 8 lines per inch.

The first line of EVFU data transferred is maintained as the top of the EVFU memory. Normally, this first line would be Format Channel 1 (Top of Forms channel). The data in the EVFU memory can be recirculated to the top (first line received) by the reception of a stop code only during an EVFU transfer. See Figure 3-1.

Note, that the paper must be aligned such that the first line of EVFU data transferred is coincident with the paper position desired at the print station. This synchronization action can be done before or after EVFU load.

The EVFU data has to contain a Top of Forms channel (Channel 1). If no Channel 1 is received and a Form Feed Control Code is received from the I/O or if a Form Feed from the Control Panel is attempted, an error will be generated.

The stop code defines the end of the EVFU data. If the stop code is not found in the buffer, a format load error will be generated.

If the IOVFU mode is selected and the EVFU data is not loaded, format operations may be programmed according to Forms Length Control (FLC) switches but the diagnostic display will indicate "LVFU", load vertical format unit. The standard ASCII codes are then recognized as the paper motion codes and the forms length is defined by the FLC switches.

Note, that the stop code can be used to position the data in the EVFU buffer to the first line received. If a load EVFU occurs with a stop code as the only data received, the EVFU data will be repositioned such that the first line received will be at the top of the memory. (Corresponds to the position at the print station.)

Tape Loadable Vertical Format Unit (TLVFU): A tape loadable version of EVFU is available which adds a tape reader, removes the requirement of loading the Format Buffer via the system interface. See Format Tape Preparation following for instructions on how to punch a format tape. The loading of the Format Buffer is initiated on power up or upon depression of the Load EVFU switch located near the vertical tape reader. The format tape is moved only during the load operation, and therefore is not coupled to the paper drive mechanism. The Load EVFU switch is only active when either of the EVFU modes (IOVFU or TLVFU) is selected, the printer controller is off line, and the diagnostic ROM is installed.

The Tape Loadable version of EVFU is selected via DIP switches within the basic controller. Refer to the Maintenance Manual (Fault Isolation section) for switch set up. Loading of the Format Buffer will occur automatically on power up or upon depression of the Load EVFU switch. The actual data loaded into the Format Buffer will start when a hole is detected in Channel 1 (TOF) and will continue until Channel 1 is again detected. The tape will continue to move and the second detection of a Channel 1 will initiate a verify load. If the tape data during a verify does not agree or if the tape is too long, a Load Error will be generated. Three LOAD/VERIFY attempts will be made before a fault is generated.

Note, that only one hole may be punched in Channel 1 (TOF) for the specified form length since this channel is used to initiate and verify load.

If the tape cannot be successfully loaded, the diagnostic display will indicate "TAPE", (tape error) and the printer will not go Ready. The operator may override this condition by pressing the Fault Reset switch. The printer will now operate in the Forms Length Control mode, and will also allow the loading of IOVFU data if initiated by the data souce.

Note, that the diagnostic ROM must be installed to load the tape. If it is not installed, a "NOLD", no load error will be displayed. Pressing the Fault Reset switch will clear this error and the printer will operate in the Forms Length Control mode.

Format Tape Preparation: Format tapes are punched to let the printer know where to advance and stop paper. There will always be a first line of print (top of forms) and a last line of print (bottom of forms) that will have to be punched and layed out for your specific application/s.

Once familiar with punching tapes, you will know to off set the tape by 3 spaces so the splice falls into an area where there are no punched holes. This will eliminate the need for repunching holes over the area where the tape has been glued.

NOTE

FORMAT TAPES ARE ALWAYS PUNCHED IN THE 6 L.P.I. MODE, EVEN FOR USE WHEN THE PRINTER IS IN THE 8 L.P.I. MODE. BEFORE PUNCHING THE FORMAT TAPE THE TOP OF FORMS (CHANNEL 1), AND THE BOTTOM OF FORMS (EITHER CHANNEL 2, 8, or 12) SHOULD BE KNOWN. CONTACT YOUR CUSTOMER ENGINEER TO DETERMINE WHICH CHANNELS ARE DESIGNATED AS TOP AND BOTTOM OF FORMS. NO OTHER PUNCHES SHOULD APPEAR IN THE LINES (ACROSS THE TAPE) WHERE THE TOP AND BOTTOM OF FORMS IS PUNCHED.

Every line on the 6 L.P.I. or 8 L.P.I. side of the format tape represents a potential line of print when printing in either the 6 L.P.I. or 8 L.P.I. mode. The printer's electronics will interpret only the 6 L.P.I. side of the tape.

Every hole punched represents a specific line on the paper. The paper advances to the desired line, prints the data and scans the format memory for the next channel selected where data should appear.

For example, if channel 1 is designated as the first line of print and channel 2 is designated as the last line of print, 10 channels are left that can reflect different line spacing combinations for different forms that are being printed. If data is to be printed on lines 5, 7, 15, 18, 29, 50, and 61, channel 3 could be selected and punched for this specific format, leaving 9 channels open for different formats.

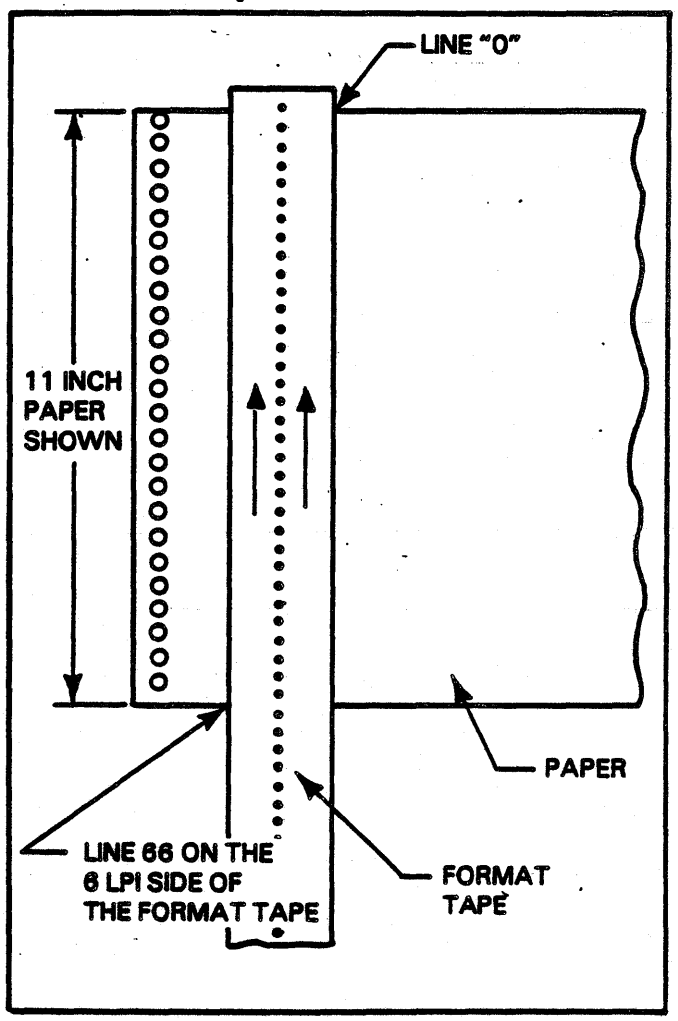

FIGURE 3-2. FORMAT TAPE REGISTRATION - 6 LPI

If printing in the 6 L.P.I. mode:

1. Measure the paper from perforation to perforation. If the paper measures 11 inches or more, it will not be necessary to make a multiple form length tape.

2. If the paper measures less than 11 inches, it will be necessary to punch multiple lengths of the paper (identical hole pattern) in order to get a tape length that measures at least 11 inches. It may be necessary on shorter papers to repeat the punched hole pattern 3 or 4 times until the tape measures at least 11 inches.

CAUTION

DO NOT CUT THE TAPE UNTIL ALL HOLES ARE PUNCHED.

3. Lay the format tape over the paper. Align line "0" directly over the top edge of the paper.

4. Mark the 6 L.P.I. side of the tape where the desired first line of print (top of forms) should appear. Normally this mark would appear within the first 3 lines of the top of the paper. Next to the mark write T.O.F. or first line of print to designate this specific mark as the first line of print.

5. Make sure the line "0" is still registered directly over the top edge of the paper.

6. Mark the 6 L.P.I. side of the tape where the desired last line of print should appear. Normally this mark would appear within the last 3 lines of the bottom of the paper. Next to the mark write B.O.F. or last line of print to designate this specific mark as the last line of print.

7. On paper that measures less than 11 inches, this pattern must be repeated until the format tape length measures at least 11 inches. Each form length punch pattern must be complete from top of paper to bottom of paper.

If printing in the 8 L.P.I. mode:

1. Measure the paper from perforation to perforation. If the paper measures 11 inches or more, it will not be necessary to make a multiple form length tape.

2. If the paper measures less than 11 inches, it will be necessary to punch multiple lengths of the paper (identical hole pattern) in order to get a tape length that measures at least 11 inches. It may be necessary on shorter papers to repeat the punched hole pattern 3 or 4 times until the tape measures at least 11 inches.

CAUTION

DO NOT CUT THE TAPE UNTIL ALL HOLES ARE PUNCHED.

3. Lay the format tape over the paper. Align line "0" directly over the top edge of the paper.

4. Note the line number designation on the 8 L.P.I. side of the tape where the desired first line of print (top of forms) should appear. Normally this mark would appear within the first 4 lines of the top of the paper.

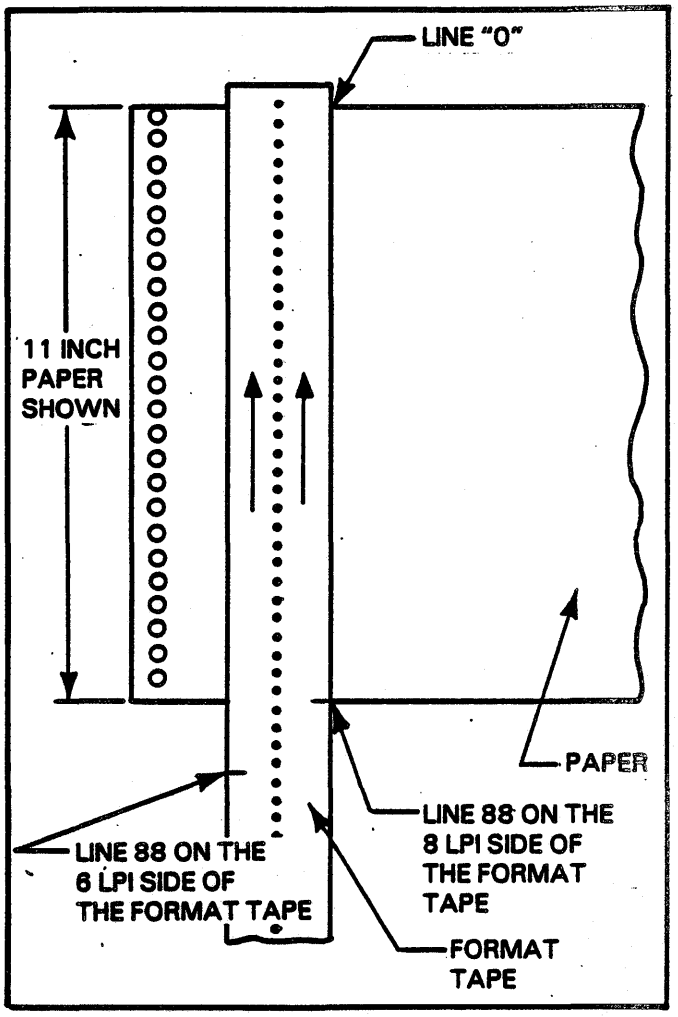

FIGURE 3-3. FORMAT TAPE REGISTRATION - 8 LPI

5. Mark this 8 L.P.I. line number designation on the 6 L.P.I. side of the tape. Next on the mark write T.O.F. or first line of print to designate this specific mark as the first line of print.

6. Make sure the line "0" is still registered directly over the top edge of the paper.

7. Note the line number designation on the 8 L.P.I. side of the tape where the desired last line of print should appear. Normally this mark would appear within the last 4 lines of the bottom of the paper.

8. Mark this 8 L.P.I. line number designation on the 6 L.P.I. side of the tape. Next to the mark write B.O.F. or last line of print to designate this specific mark as the last line of print.

9. On paper that measures less than 11 inches, this pattern must be repeated until the format tape length measures at least 11 inches. Each form length punch pattern must be complete from top of paper to bottom of paper.

Format Tape Punching:

1. Using the square hole format tape punch as illustrated, punch the channels marked on the format tape as follows:

   a. Position the Line Selector to 6 L.P.I. Slide the format tape until the line to be punched is centered under the punch bar. Engage the format tape with the sprocket pins. Set the Channel Selector to the number of the channel to be punched. Punch the hole by pressing down on the punch bar.

   b. Advance the tape to the next line to be punched with the Line Advance Tape Control. Select the channel to be punched.

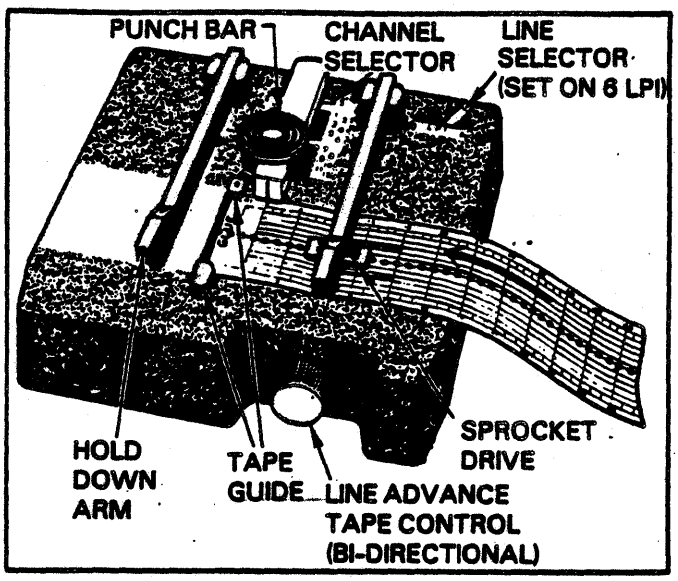

FIGURE 3-4. FORMAT TAPE PUNCH

   c. Repeat steps a and b until all the desired lines are punched.

If a punch other than the 44681276 is used, refer to the illustration, then use the punch manufacturer's instructions.

2. To splice the tape into a loop, apply a thin coat of adhesive across the width of the tape at each end as indicated. Allow the adhesive to dry until tacky. A soft-hardening adhesive should be used for maximum tape life. Recommended adhesives are Carter's Rubber Cement or Duco Cement. If the tape is equipped with self stick tape, peel off the backing and register per step 3.

3. Place the bottom end of the tape over the top end so that the edge butts against the zero sprocket hole line and so that the overlapping sprocket holes compliment each other.

4. Apply pressure to the union until the tape is firmly bonded. Remove excess adhesive.

5. Repunch any holes that were covered up when the tape was glued.

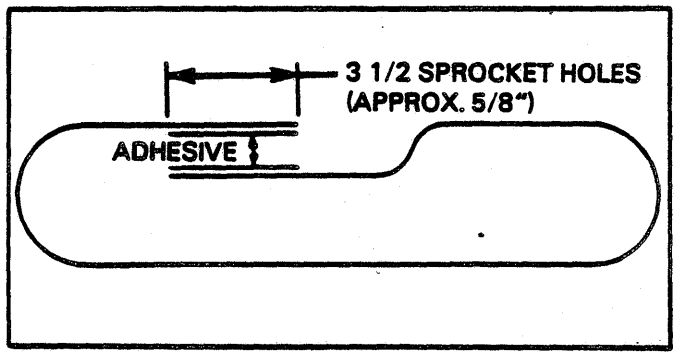

FIGURE 3-5. FORMAT TAPE ADHESION

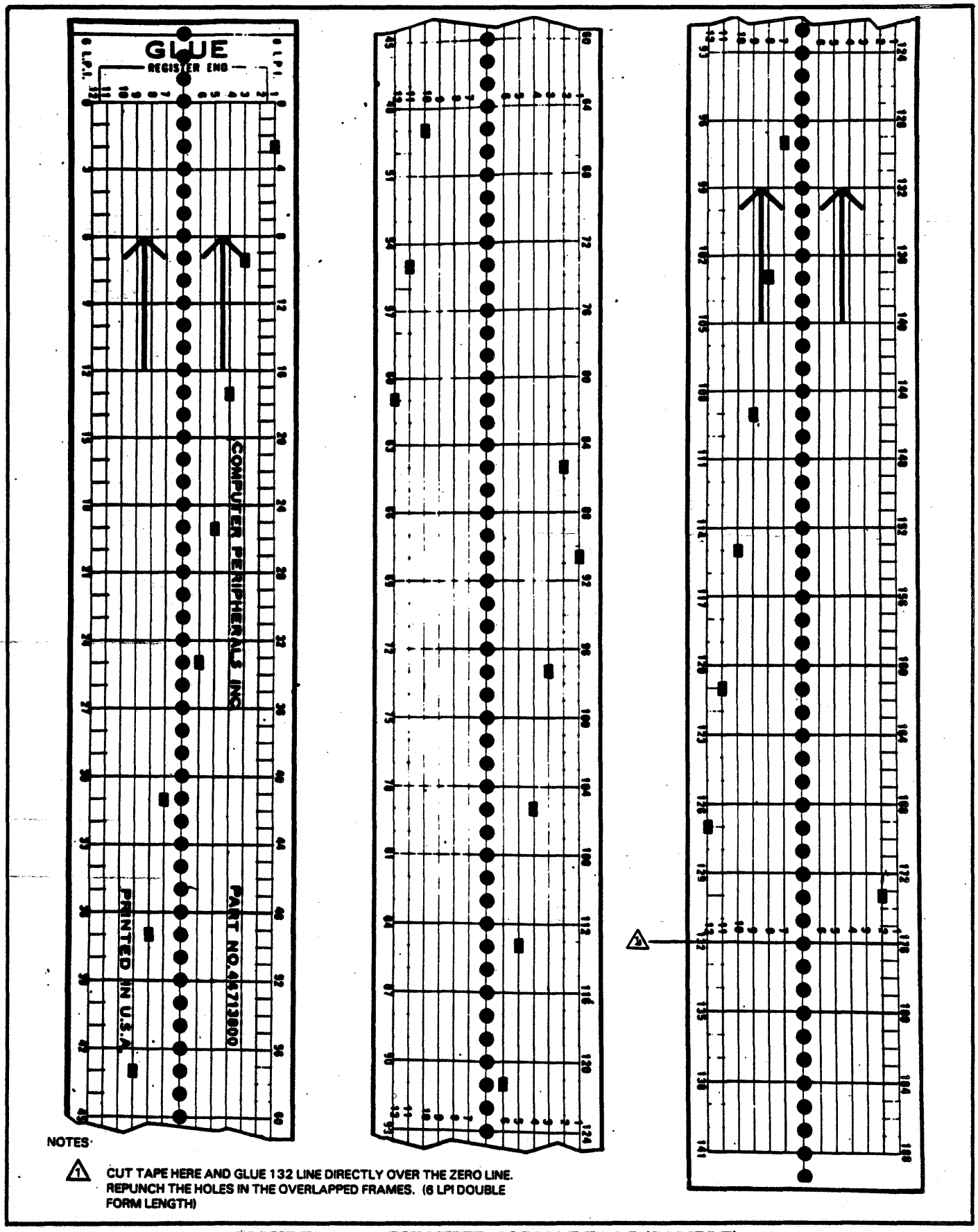

FIGURE 3-6. A PUNCHED FORMAT TAPE (SAMPLE)

Paper Motion Commands and Control Codes

The basic ASCII control codes allow the selection of Line Feed (LF), Vertical Tab (VT), Form Feed (FF), and Carriage Return (CR). In addition, if the eighth bit is a "1", the low order 7 bits indicate the selection of line counter mode, and if the eighth bit is a "0" and the seventh bit is a "1", one of the 12 format channels is selected. The control code configuration is the same for TLVFU and IOVFU. See Table 3-2.

The transmission of a STD START code (6EH) followed by a STOP code (6FH) will place the printer controller in the line counter only mode. In this mode it is possible to select line counter commands without loading the EVFU. This mode may be reset by the transmission of a STOP code only. Note also that line counter commands are always valid if the EVFU has been properly loaded.

I/O Selectable 6/8 LPI

When either of the EVFU modes (IOVFU or TLVFU) is selected, the I/O may select the vertical pitch by the use of control codes. These codes allow the selection of 6 or 8 lines per inch at the discretion of the data source. This feature may be used in one of two ways. First, the appropriate start code can be placed at the beginning of the EVFU data automatically selecting the desired lines per inch for that particular EVFU load. Secondly, if the EVFU is not loaded, it is possible to select the vertical pitch when operating in the default mode of Forms Length Control (FLC). In this case, and EVFU load with a vertical pitch select start code (6C or 6D HEX) followed by a stop code will select the appropriate vertical pitch (See Figure 3-1 for setting/resetting of I/O select pitch mode).

Note, that the I/O selectable pitch mode requires that the data source insure that the number of lines at 6 LPI and the number at 8 LPI, for a given page length, are an even multiple for that page length. If this does not occur, the Top of Form to paper position alignment will be disturbed and a "PAGE" error will result. To help insure that the data souce has total control over the page configuration, the Auto Perf Skip is disabled when the I/O has selected the vertical pitch.

When I/O selectable pitch mode is selected, the 6/8 LPI select switch on the Control Panel is disabled. For this reason, the I/O should always remove the I/O selectable mode by the sending of a standard start/stop code when terminating a particular job.

OPERATOR CORRECTABLE FAULTS

There are 25 operator correctable faults sensed by the printer. These are listed alphabetically in the Operator Cards located in the band cover, beneath the printer's bonnet.

CE CORRECTABLE FAULTS

There are 22 Customer Engineer faults sensed by the pritner. These are documented in the Maintenance Manual (Fault Isolation section).

STATUS DISPLAYS

There are 21 status displays which are normal operating codes. They are listed in Table 3-3.

TABLE 3-2. PAPER MOTION COMMANDS AND CONTROL CODES

BIT	7	6	5	4	3	2	1	0	HEX	FUNCTION
	0	0	0	0	1	0	1	0	0A	LINE FEED (LF)
	0	0	0	0	1	0	1	1	0B	VERTICAL TAB (VT) ⚠1
	0	0	0	0	1	1	0	0	0C	FORM FEED (FF)
	0	0	0	0	1	1	0	1	0D	CARRIAGE RETURN (CR)

PAPER MOTION CONTROL CODES

ALSO SEE TABLE 3-1 FOR EVFU CONTROL CODES

0	1	X	X	0	0	0	0	CHANNEL 1
0	1	X	X	1	0	1	1	CHANNEL 12
0	1	X	X	1	1	0	0	ILLEGAL CHANNEL SELECTED
0	1	X	X	1	1	0	1	
0	1	X	X	1	1	1	0	
0	1	X	X	1	1	1	1	

X= DO NOT CARE BIT

1	0	0	0	0	0	0	0	LINE COUNTER OPTION MOVE 0 LINE SPACES
1	1	1	1	1	1	1	1	MOVE 127 LINE SPACES

PAPER MOTION COMMANDS

⚠1 VT SELECTS CHANNEL 3 OR 4 IF EVFU IS LOADED. IF EVFU IS NOT LOADED, VT WILL GENERATE A "CHSL" ERROR AND A SINGLE SPACE PAPER MOTION. REFER TO THE MAINTENANCE MANUAL (FAULT ISOLATION SECTION) FOR SWITCH SETUP ON THE CPU BOARD (1PC2).

TABLE 3-3. STATUS DISPLAYS

DISPLAY	STATUS
FMFD	OFF LINE FORM FEED ACTIVE OR SWITCH DEPRESSED
FRES	FAULT RESET SWITCH DEPRESSED
HMTN	HORIZ MOTION CYCLE IN PROCESS
HOME	DIAGNOSTIC STATUS. INDICATES THAT HOME POSITION TRANSDUCER ACTIVE.
LFSW	OFF LINE SINGLE SPACE SWITCH DEPRESSED
LIP	I/O DATA TRANSFER IN PROGRESS
LVFU	EVFU MODE SELECTED AND EVFU NOT LOADED
NFLT	NORMAL STATUS OF "NO FAULTS"
NHOM	DIAGNOSTIC STATUS. INDICATES THAT HOME POSITION TRANSDUCER NOT ACTIVE
NOLD	DIAGNOSTIC STATUS. INDICATES THAT AN OFF LINE EVFU LOAD ROUTINE HAS BEEN ACTUATED, BUT EVFU MODE IS NOT SELECTED
NUTS	BAND NOT UP TO SPEED
PHA	DIAGNOSTIC STATUS. INDICATES PHASE APPLIED TO HORIZONTAL STEPPER MOTOR
PHB	DIAGNOSTIC STATUS. INDICATES PHASE APPLIED TO HORIZONTAL STEPPER MOTOR
PHC	DIAGNOSTIC STATUS. INDICATES PHASE APPLIED TO HORIZONTAL STEPPER MOTOR
PHD	DIAGNOSTIC STATUS. INDICATES PHASE APPLIED TO HORIZONTAL STEPPER MOTOR
PMTN	PAPER MOTION CYCLE IN PROCESS
PRNT	PRINT CYCLE IN PROCESS
SREQ	AN I/O STATUS REQUEST IS IN PROCESS
TLIP	A TAPE LOAD IS IN PROCESS
TPSW	OFF LINE TEST PRINT SWITCH DEPRESSED
	DIAGNOSTIC STATUS. INDICATES DISPLAY SEGMENT TEST IN PROGRESS

TEST PRINT FEATURES

There are built in printer tests which are available to the Customer Engineer. These tests are used in conjunction with the Test Print switch on the Control Panel and require certain switches on the CPU board to be set up. The available tests are documented in Section 6 and listed as follows:

a. All one character
b. Sliding Alphabet
c. Horizontal Motion (Move Hammer Bank)
d. Horizontal Set-Up
e. Vertical Motion (Exercise Vertical System)
f. Load EVFU (Off Line EVFU Load)
g. Display Test (Control Panel Lamp Test)
h. Run Ribbon and Band
i. Examine Print/EVFU Memory
j. Configuration Printout (Print out configuration of printer).

SECTION IV
INPUT POWER BOARD + AC/DC DISTRIBUTION

This section contains information on the input power voltages, optional input voltages and D.C. voltages necessary to drive the printer's electrical components. Refer to Logic Schematic section for wiring information.

INPUT POWER

The printer can be equipped with a 60 Hz transformer, a 50 Hz transformer or an optional 50/60 Hz transformer. Units equipped with a 60 Hz transformer are hard wired at the factory for 60 Hz 120 VAC. For the unit to function however, SW1 on the backplane board (1BP1) must be set to the 120/220 setting. Units equipped with a 50 Hz transformer are hard wired at the factory for 50 Hz, 220 VAC or 240 VAC. Selection between 220 VAC and 240 VAC is accomplished by setting SW1 on the backplane board (1BP1) to either the 120/220 setting or to the 240 setting. Units equipped with an optional 50 and 60 Hz transformer can be programmed from one frequency of operation to another by use of a universal programming board (4PC1) and a programming plug (installed in the printer when this option is used) to select the proper voltage. Input power coversions are documented in the printer's Installation and Checkout Instructions. The following voltages are available with the optional 50/60 Hz transformer:

60 HZ	50 HZ
100 VAC	100 VAC
120 VAC	220 VAC
	240 VAC

Voltage regulation is achieved by the use of a ferroresonant transformer and a resonating capacitor. This resonant circuit increases the flux density, saturating the transformer core on the peaks of the AC alternation producing a near square wave output. By saturating the transformer on the voltage peaks, normal voltage variations in the primary winding will not be present in the output. Therefore, the transformer output will remain almost constant.

AC Output (See Figure 4-1)

The transformer supplies 110 VAC to the blower, band and ribbon motors. The AC power to these motors is controlled by solid state relays (SSR's).

DC Output (See Figure 4-2)

The AC is converted to DC on the Input Power Board. It provides 50V, 25V and 10V to various components. The fused 50V circuit is converted to +36V on the hammer driver board. There is a fused 25V circuit which is used for the vertical and horizontal stepper motors and a 25V unfused circuit which supplies power to the regulator circuitry. There are two 10V fused circuits. One provides power for the paper clamp system, the other provides a regulated +5V which is converted from 10V to 5V on the Print Head board. From there it provides power for the backplane board.

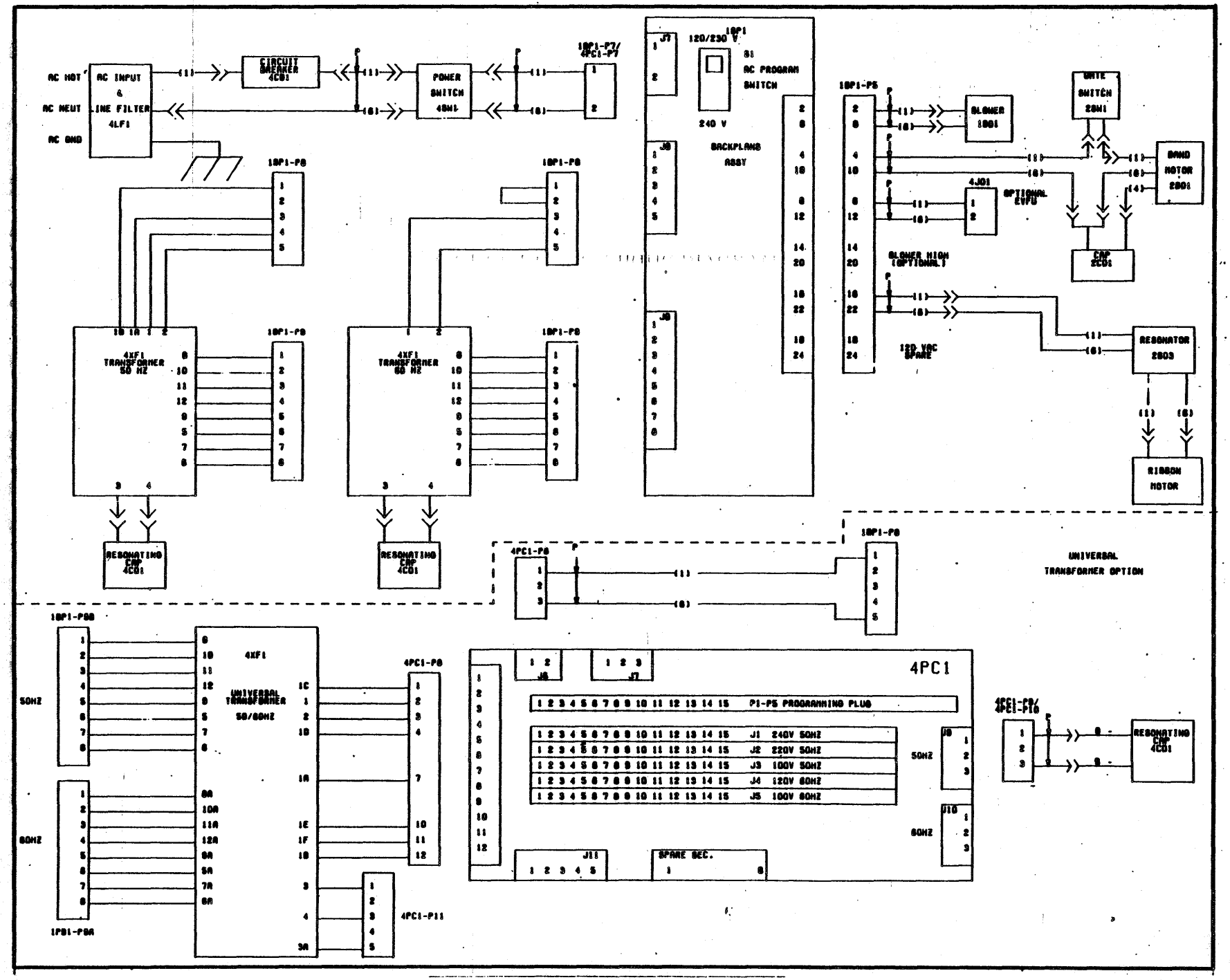

FIGURE 4-1. AC WIRING DIAGRAM

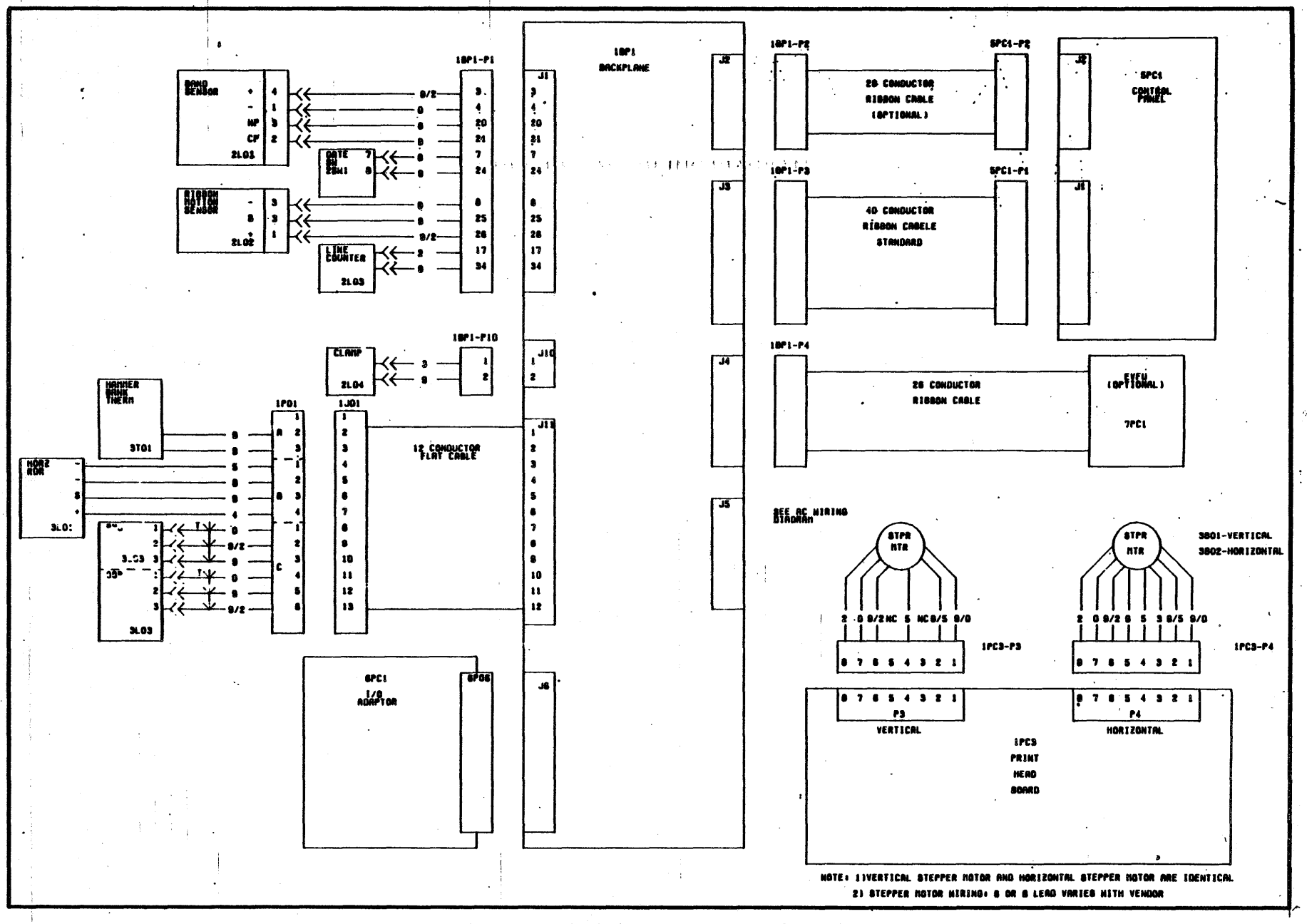

FIGURE 4-2. DC WIRING DIAGRAM

SECTION V
PERSONALITY MODULE

This section contains information on the interface board (personality module) with which the printer is equipped. The purpose of the interface board is to allow communication between the data source and the printer without changing the CPU (Controller) board.

DATA PRODUCTS PERSONALITY MODULE

There are three switch networks (SWN1 thru SWN3) available to the Customer Engineer on the personality module which affect the printer's operation. See the Installation and Checkout Instructions for location of switch networks.

Switches

Space Code Switches (SWN3, SW1 thru SW8, location A18): There are 8 DIP switches provided for space code selection. When the code selected by these switches is sent from the data source, the personality module replaces the code sent with a blank code (normally 20 hex).

Paper Instruction Disable (SWN1, SW1, location C10): This switch when active, disables the paper instruction signal on the personality module.

Data Bit 8 Disable (SWN1, SW2, location C10): This switch when active, disables the data bit 8 signal on the personality module.

Low True (SWN1, SW3 location C10): This switch when active inverts the following signals on the personality module to active low logic levels.

a. Demand
b. Ready
c. On Line
d. Ident 0 and Ident 1
e. VFU RDY
f. BOF
g. TOF
h. Data Bits 1 thru 8
i. Paper Instruction
j. Strobe

VFU Verify (SWN1, SW4, location C10): This switch when active, indicates to the data source that the printer has EVFU capability.

Buffer Clear Low True (SWN1, SW5, location C10): This switch when active, inverts the buffer clear signal on the personality card.

Vertical Tab Enable (SWN2, SW5 location C10) This switch when active allows the personality module to recognize the Vertical Tab code (0B hex) as a valid paper motion control code.

Control Code Enable (SWN2, SW6, location C10): This switch when active, allows the personality module to recognize the codes 0AH, 0BH, 0CH and 0DH (Line Feed, Vertical Tab, Form Feed and Carriage Return respectively) as paper motion control codes. When this switch is inactive, the personality module will terminate a print line buffer (PLB) load with vertical format commands only and the 0AH,0BH, 0CH, and 0DH codes are treated as print data and stored in the PLB.

63 Line Count Enable (SWN2, SW7, location C10): This switch when active, disables the 6 bit line counter option and places the printer in a 4 bit line counter mode. When the switch is inactive the printer is in a 6 bit line counter option.

Enable Character Translate Switches (SWN2, SW1 thru SW4, location C10): These switches when active, allow characters from the data souce to be translated by the translator ROM's. When a switch is active and a print band with the corresponding character set is installed, the character codes from the data source will be translated by the ROM's before being stored in the PLB. The switches can be configured in any combination.

INTERFACE CHARACTERISTICS

Transmitter/Receiver

The printer can have either short line interface or long line interface. Short line interface uses single ended transmitters and receivers, the long line interface uses differential transmitters and receivers.

Short Line Interface: The transmitters and receivers have a drive capability of up to 50 feet (15.3 meters). Figure 5-1 shows a typical transmitter and receiver and the recommended cable characteristics. When this recommended configuration is used, the line voltages will be as follows:

Logic "1" = 3.25 ± 0.5V (True or Active Level)
Logic "0" = 0.2 ± 0.2V (False or Inactive Level)

Long Line Interface: The transmitters and receivers used on the long line interface have a drive capability of up to 500 feet (152.4 meters). Figure 5-2 shows a typical transmitter and receiver, and the recommended cable characteristics. The signal is active when the (+) line is a higher voltage than the (-) line. The signal is inactive when the (-) line is a higher voltage than the (+) line. The long line interface components are mounted on the I/O connector board.

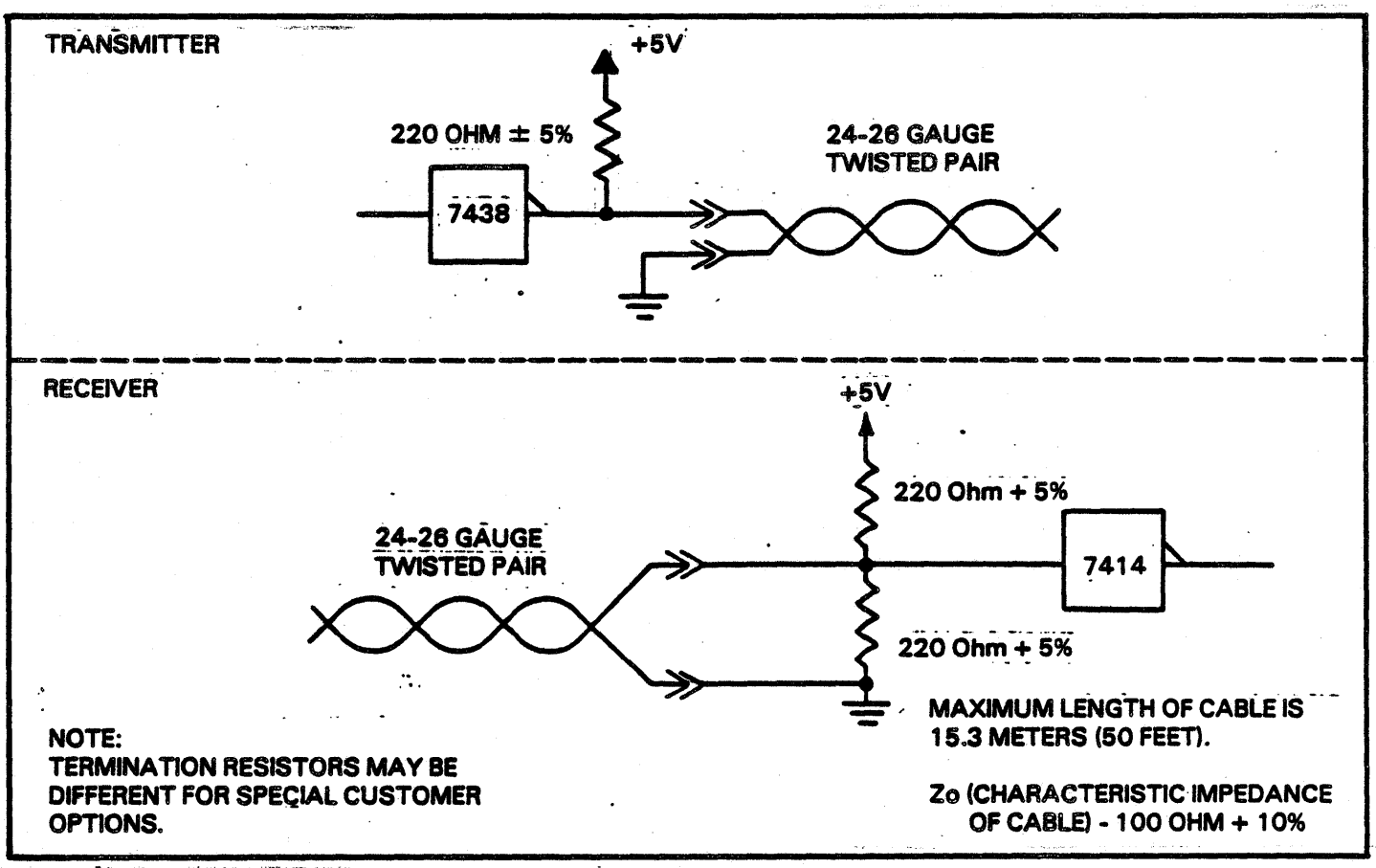

FIGURE 5-1. STANDARD TRANSMITTERS AND RECEIVERS FOR SHORT LINE INTERFACE

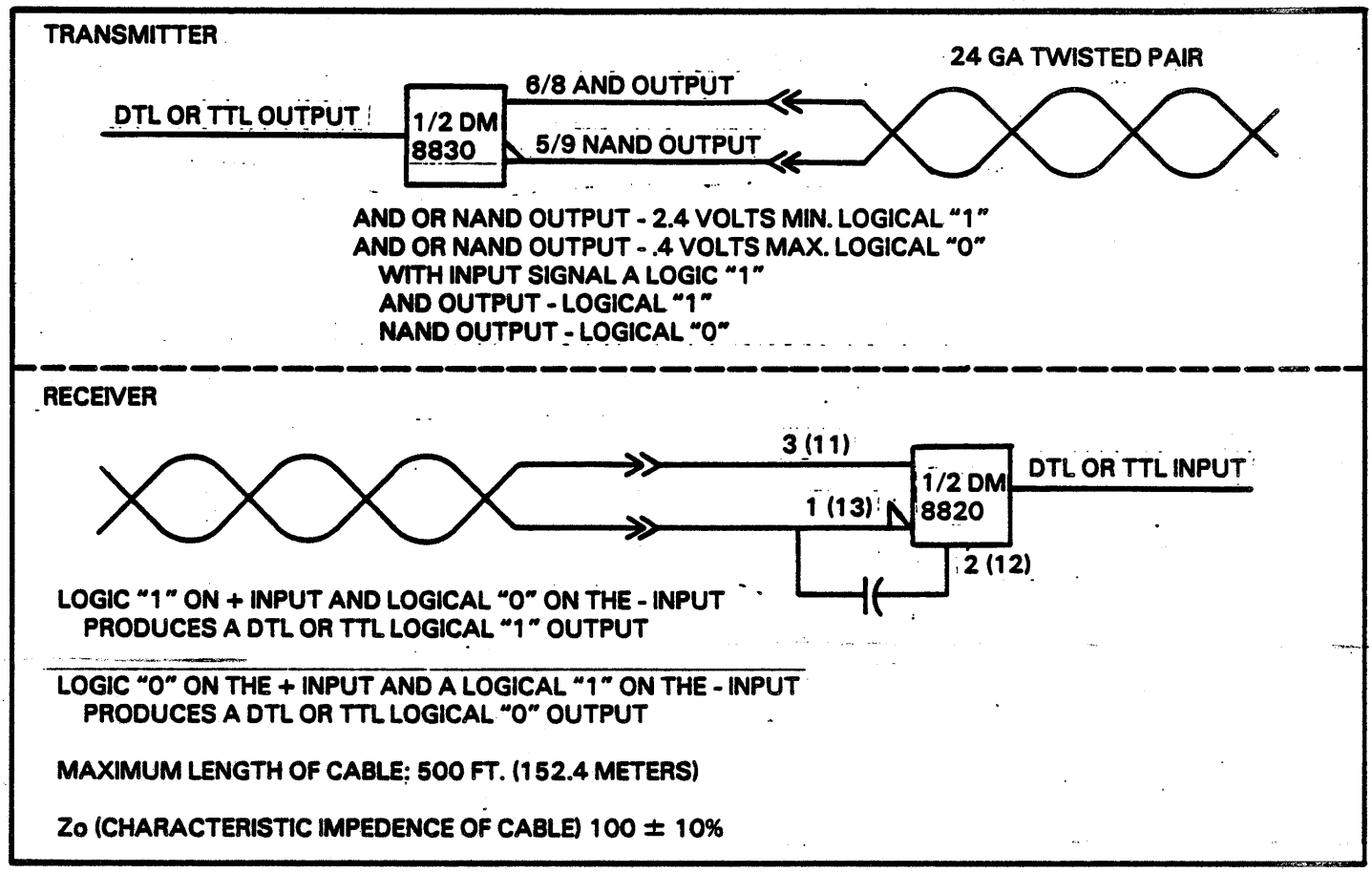

FIGURE 5-2. OPTIONAL TRANSMMITTERS AND RECEIVERS FOR LONG LINE INTERFACE

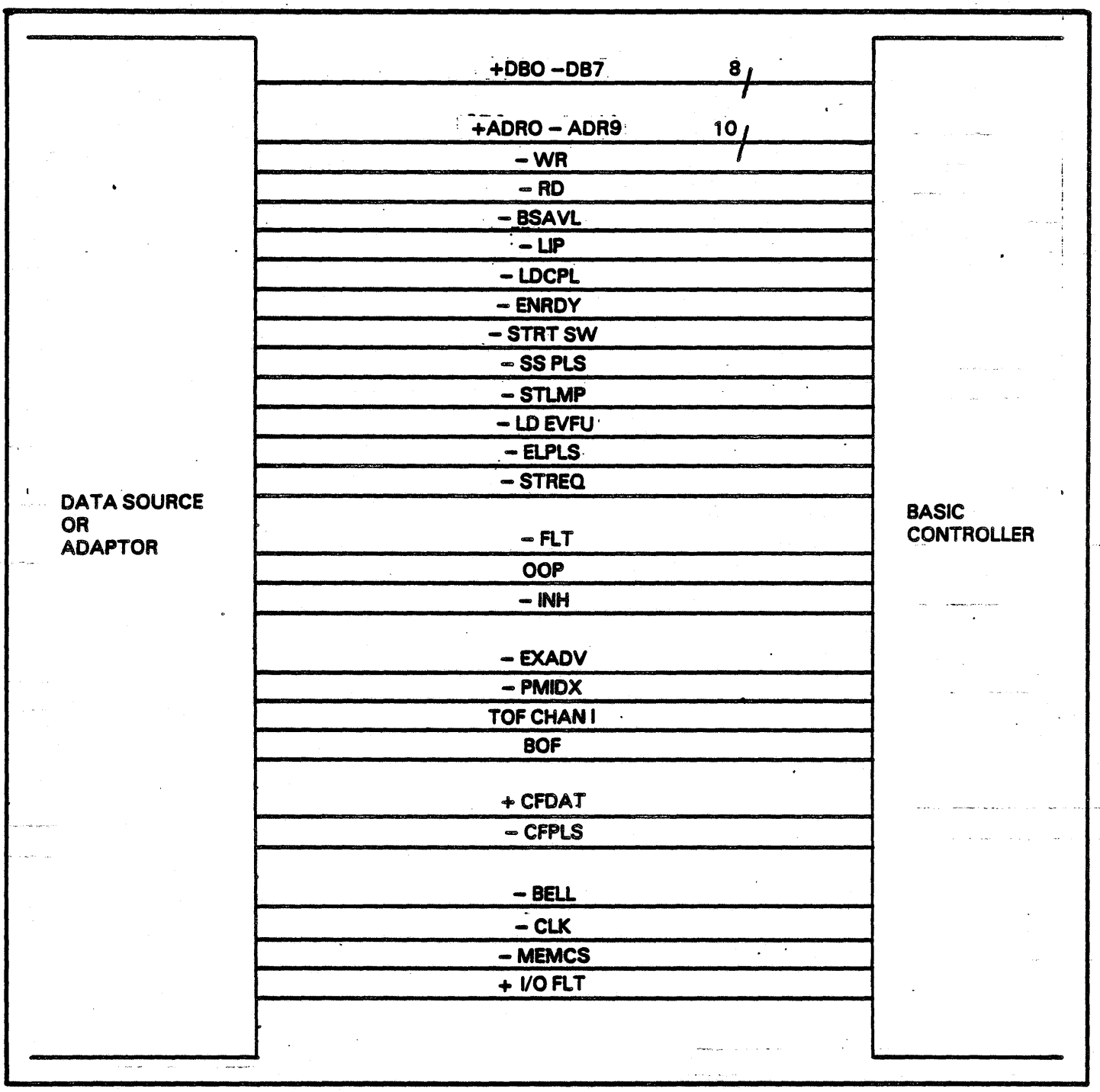

FIGURE 5-3. STANDARD BUS

INTERFACE SIGNALS (See Figure 5-4)

The minus sign before a signal name indicates the actual signal line has a negated logical sense being active when logical "0". A plus indicates positive logical sense being active when at a logical "1". Tables 5-4 thru 5-7 show connector pin assignments. Figure 5-5 shows timing relationships. Figure 5-4 shows data source to printer interface lines.

Ready

A signal from the printer which when active (logic 1) indicates that no faults exist within the printer, paper is loaded and the printer is ready to be placed On Line.

On Line

A signal from the printer which, when active (logic 1) indicates to the data source that the printer has been placed On Line. When On Line is active, the following conditions exist:

a. The printer is READY.
b. The START switch has been activated and the controller has responded by making (-) ENRDY active. On Line remains active if (-) ENRDY goes inactive and print line buffer (PLB) load is in progress.

Demand

A signal from the printer which is used to synchronize data transfer from the data source to the personality module. If the printer is On Line, the Demand line will go active to request a character from the data source. Demand will then drop. When Demand has dropped, the Data Strobe may be dropped. Note that another Demand will not be generated until Data Strobe has dropped. See Figure 5-5 for timing details.

Data Strobe

A signal from the data source to the printer which indicates that a data character has been placed on the data lines. When a Data Strobe occurs, the printer samples the data lines and brings the Demand line inactive.

Data 1 Thru 8 and Paper Instruction

These are signal lines from the data source to the printer which carry the codes for print data and forms motion commands. Data on these lines must be stable for at least 50ns prior to and after the Data Strobe. See Figure 5-5 for timing details.

Ident 0 and Ident 1

Two signal lines from the printer to the data source contain binary coded information which identifies the type of band currently on the printer. Ident 0 and Ident 1 are valid only when On Line is active.

IDENT I	IDENT 0	TYPE OF BAND
0	0	128 Character
0	1	96 Character
1	0	64 Character
1	1	48 Character

-Buffer Clear

A signal from the data source (logic 0) to the printer that resets the print line buffer to column one if a forms motion command has not yet been received. (-)Buffer Clear must be active for a minimum of two microseconds.

Bottom of Forms (BOF)

This is a status line which is active (logic 1) when the forms are at the Bottom of Forms position. The line goes active when the form moves to the Bottom of Forms position, and goes inactive when it leaves this position. In non EVFU machines, Bottom of Forms is defined as being 3,4,5, or 6 lines (defined by DIP switches on the CPU board) before the Top of Forms position for either the Fixed Forms Length or the Selectable Forms Length Control Mode.

When the EVFU option is loaded, the Bottom of Forms location is defined by either Channel 2,8, or 12 by use of DIP switches on the CPU board.

Top of Forms (TOF)

This is a status line which is active (logic "1") when the forms are at the Top Of Forms position. The line goes active when the form moves to the Top Of Forms position, and goes inactive when it leaves this position. The Top of Forms location is defined by a counter in Forms Length Control mode, or by Channel 1 when the EVFU is loaded.

VFU RDY

This is a status line to the data source that when active indicates that the VFU is ready. This signal goes inactive when a start DAVFU load code is sent by the data source. VFU RDY then goes active after a stop DAVFU load code is sent by the data source, and the EVFU data has been verified to be valid.

Interface Verify

This allows the data source to verify that the I/O connector has been attached by jumpering pins 46 and 45 on the I/O connector together on the personality module.

EVFU Installed and EVFU Verify

In order to allow the data source to verify that the printer has an EVFU capability, the EVFU verify switch on the personality module must be closed.

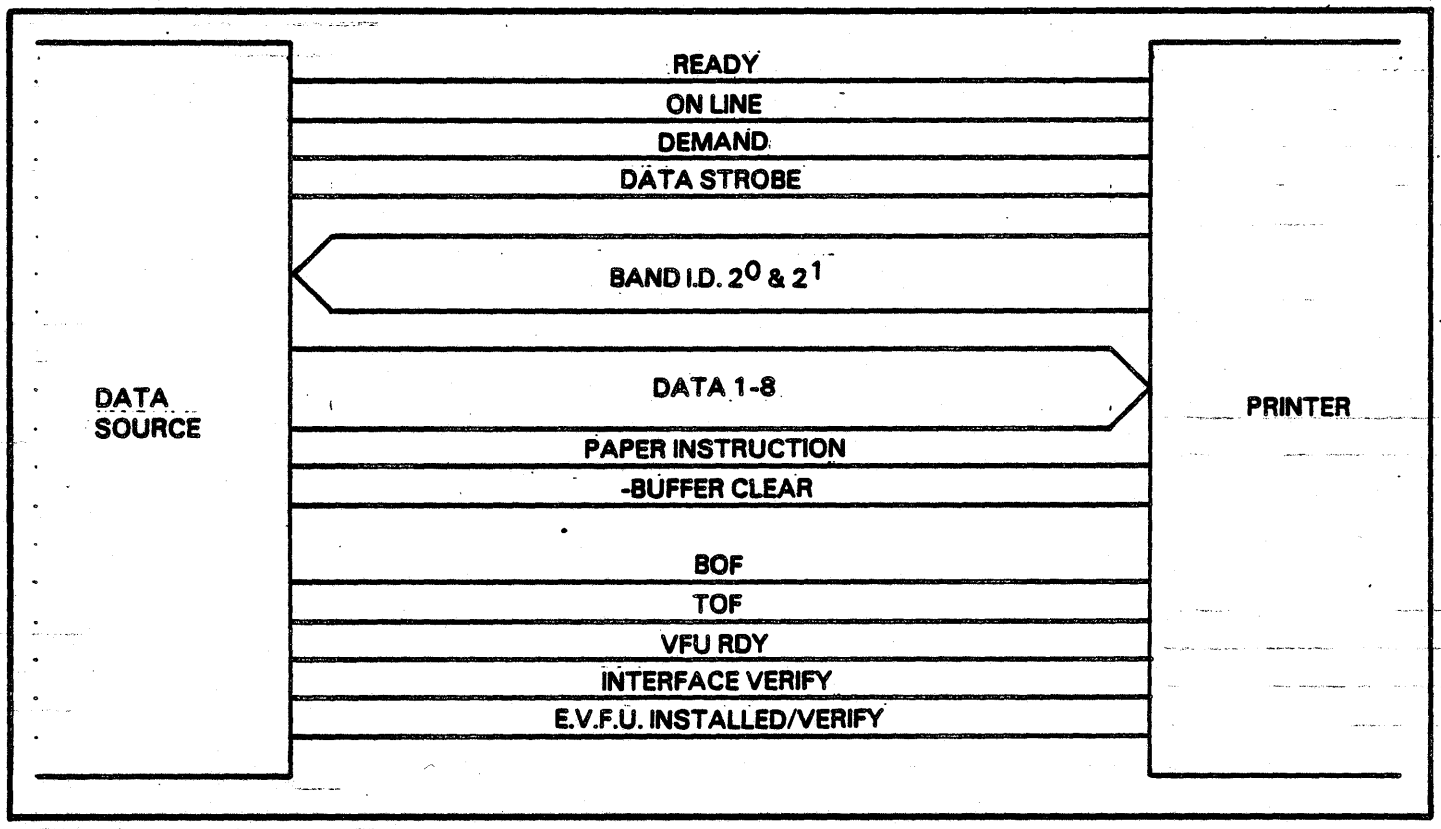

FIGURE 5-4. DATA SOURCE TO PRINTER INTERFACE LINES

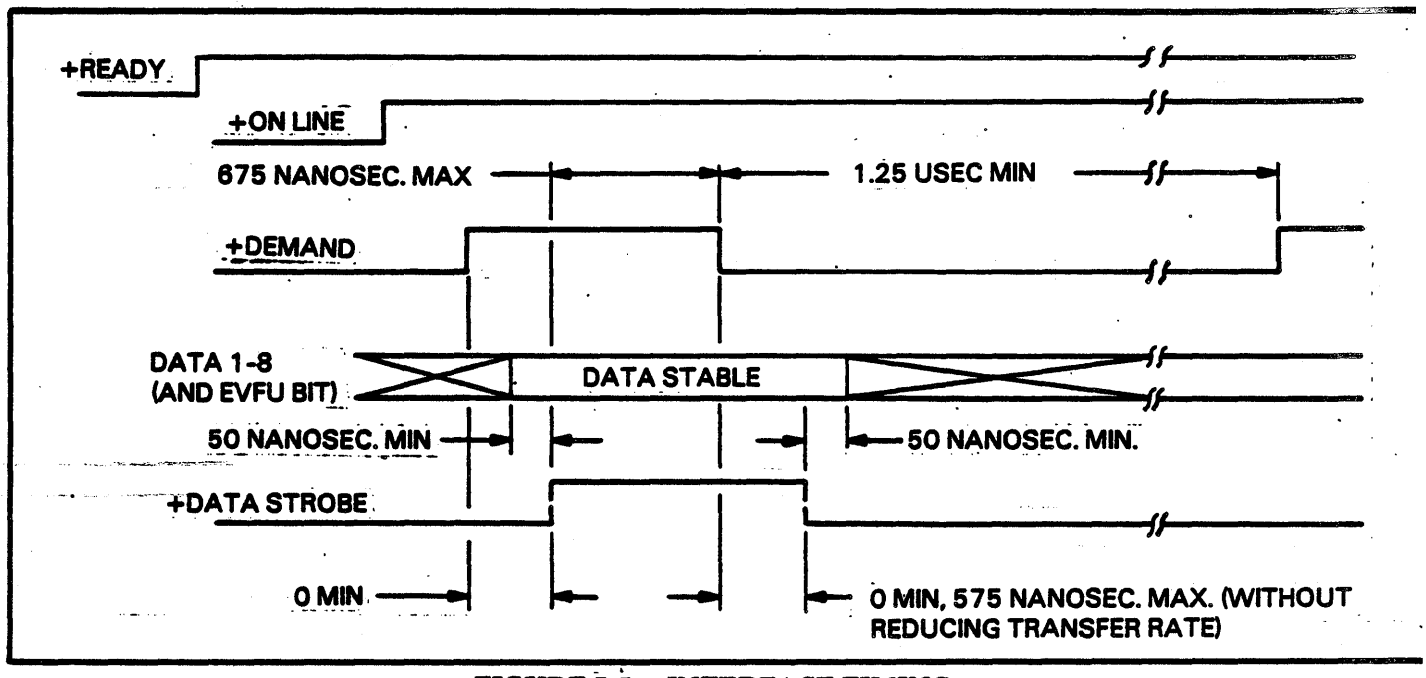

FIGURE 5-5. INTERFACE TIMING

DATA INTERCHANGE TECHNIQUE

Three different types of information can be sent to the printer from the data source using the data lines and vertical format lines. The types of information are:

a. Print data for a line of print
b. Forms motion commands
c. DAVFU data

Print Data for a Line of Print (see Table 5-1)

When the personality module is Ready and has been placed On Line, the personality module will enter the Print Line Buffer load (PLB) mode. In this mode, the first character transfered is stored in the PLB for column one. The second for column two etc., until the Print Line Buffer is full. (Normally 132 characters in standard pitch, but depends on the number of columns and the horizontal pitch). All excess characters are not printed, although the personality module will continue to accept them. No printing will occur until a Forms Motion Command is sent. All print data must be sent with paper instruction signal false (logic 0). See Table 5-1 for print codes.

Forms Motion Commands (see Table 5-2)

Once the PLB load has begun, the personality module will continue to accept print data until a Forms Motion Command is received. Forms Motion Commands are Paper Motion Control codes or Vertical Format Commands. When the paper instruction signal is active, the data on the data lines are interpreted as Vertical Format Commands. When paper instruction is false, the following Paper Motion Control codes will terminate the data transfer:

a. Paper Feed (PF): 0A (Hex)
b. Form Feed (FF): 0C (Hex)
c. Carriage Return (CR): 0D (Hex)
d. Vertical Tab (VT): The 0B (Hex) code causes the data transfer to terminate if the Vertical Tab Enable Switch on the personality module is active.

DAVFU Data: The DAVFU load may begin when Demand is active and the PLB is not being loaded by sending one of the three start codes. After receiving a start code, the personality module will interpret the data on the data lines as VFU information and store the data in the VFU memory on the CPU board. The personality module will continue to accept the VFU data until a stop code is received.

The personality module will load the start code, 144 lines (maximum) of VFU data, and the stop code into the VFU memory of the controller board.

Stop Code Only: Stop code only is used to recirculate the DAVFU memory to the first line loaded position. See the printer product specification for details.

EVFU Load Errors (see Table 5-3)

If the EVFU data has not been loaded properly (data format error or an overflow error), the printer will be placed in an Off Line condition. A data format error is defined as a Stop code having been loaded into an odd byte location. An Overflow error is defined as an EVFU load greater than 144 lines.

TABLE 5-1. STANDARD CHARACTER AND CODE SET FOR PRINT DATA

SWITCH POSITION				bit 7 bit 6 bit 5	0 0 0	0 0 1	0 1 0	0 1 1	1 0 0	1 0 1	1 1 0	1 1 1
bit 4	bit 3	bit 2	bit 1									
0	0	0	0				SP	0	@	P	`	p
0	0	0	1				!	1	A	Q	a	q
0	0	1	0				"	2	B	R	b	r
0	0	1	1				#	3	C	S	c	s
0	1	0	0				$	4	D	T	d	t
0	1	0	1				%	5	E	U	e	u
0	1	1	0				&	6	F	V	f	v
0	1	1	1				'	7	G	W	g	w
1	0	0	0				(	8	H	X	h	x
1	0	0	1		LF		)	9	I	Y	i	y
1	0	1	0	USE IS OPTIONAL	VT		*	:	J	Z	j	z
1	0	1	1		FF		+	;	K	[	k	{
1	1	0	0		CR		,	<	L	\	l	|
1	1	0	1				-	=	M	]	m	}
1	1	1	0				.	>	N	^	n	~
	1	1	1				/	?	O	_	o	Spec. Char.

1 = ON
0 = OFF
SWITCH 1 = LEAST SIGNIFICANT BIT

64
96
2
3

NOTES:

1. THE ABOVE CHARACTER AND CODE SET IS USED INTERNALLY WHEN THE BAND CODE TRANSLATER ROM's ARE DISABLED.

2. ALL UNDEFINED CODES IN THE FIRST TWO CHART COLUMNS WILL BE TREATED AS A SPACE CODE WHEN ASCII CONTROL CODES ARE USED. WHEN ASCII CONTROL CODES ARE NOT USED, CHARACTER CODES FOR 128 CHARACTER BANDS CAN BE ASSIGNED.

3. ALL CODES IN THE LAST TWO COLUMNS WILL BE TREATED AS SPACE CODES WHEN A 64 CHARACTER BAND IS INSTALLED.

TABLE 5-2. FORMS MOTION COMMANDS

VERTICAL FORMAT	DATA BITS 8	7	6	5	4	3	2	1	
1	X	X	X	1	0	0	0	0	SUPPRESS SPACE
1	X	X	X	1	0	0	0	1	SINGLE SPACE
1	X	X	X	1	0	0	1	0	DOUBLE SPACE
1	X	X	X	1	1	1	1	0	14 SPACE
1	X	X	X	1	1	1	1	1	15 SPACE
1	X	X	X	0	0	0	0	0	ADVANCE TO CHANNEL 1
1	X	X	X	0	0	0	0	1	ADVANCE TO CHANNEL 2
1	X	X	X	0	0	0	1	0	ADVANCE TO CHANNEL 3
1	X	X	X	0	1	0	1	0	ADVANCE TO CHANNEL 11
1	X	X	X	0	1	0	1	1	ADVANCE TO CHANNEL 12
1	X	X	X	0	1	1	0	0	ILLEGAL COMMAND
1	X	X	X	0	1	1	0	1	ILLEGAL COMMAND
1	X	X	X	0	1	1	1	0	ILLEGAL COMMAND
1	X	X	X	0	1	1	1	1	ILLEGAL COMMAND
1	0	1	1	0	1	1	1	0	START DAVFU LOAD (WON'T TERMINATE LINE)
1	0	1	1	0	1	1	1	1	END DAVFU LOAD
X	X	X	C_6	C_5	C_4	C_3	C_2	C_1	ODD TAPE DATA WORD
X	X	X	C_{12}	C_{11}	C_{10}	C_9	C_8	C_7	EVEN TAPE DATA WORD
0	0	0	0	0	1	0	1	0	LF (LINE FEED) ASCII CONTROL CODE
0	0	0	0	0	1	1	0	0	FF (FORM FEED) ASCII CONTROL CODE
0	0	0	0	0	1	1	0	1	CR (CARRIAGE RETURN) ASCII CONTROL CODE
0	0	0	0	0	1	0	1	1	VT (VERTICAL TAB) ASCII CONTROL CODE

(1) ILLEGAL COMMAND

DAVFU MODE ONLY

(2) START DAVFU LOAD (WON'T TERMINATE LINE)

ONE FORM LINE

NOTES:

(1) PRINTER WILL GO TO "STOP" MODE AND DISPLAY ILCH (ILLEGAL CHANNEL SELECTED).

(2) CODE 6E (HEX) WILL DEFAULT TO THE 6/8 LPI SWITCH, CODE 6C (HEX) WILL SET THE PRINTER TO 6 LPI, CODE 6D (HEX) WILL SET THE PRINTER TO 8 LPI.

WHEN THE 63 LINE COUNT DISABLE SWITCH ON THE PERSONALITY MODULE IS IN THE INACTIVE POSITION, BITS 6 AND 7 ARE USED AS THE MOST SIGNIFICANT BITS.

WITH THE FORMAT OF ODD AND EVEN TAPE DATA WORDS AS SHOWN, IT IS POSSIBLE TO GENERATE AN INVALIDE END DAVFU LOAD. IT IS UNDESIRABLE THEN TO USE 2F (HEX) FOR A VALID TAPE DATA WORD (DATA BITS 7 AND 8 AND PAPER INSTRUCTION ARE DON'T CARE BITS).

X= DON'T CARE BIT.

TABLE 5-3. TAPE LOAD EXAMPLE

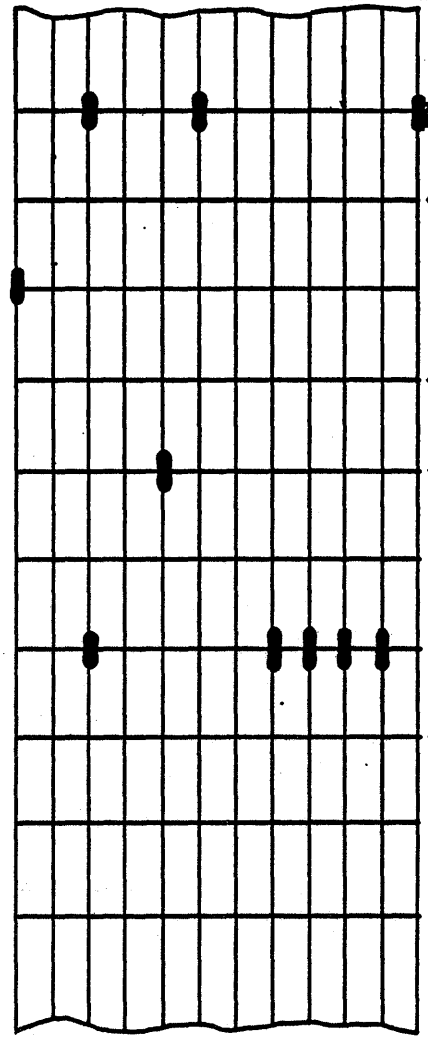

FORM ROW NUMBER		VERTICAL FORMAT	DATA LINES 8	7	6	5	4	3	2	1	
START LOAD		1	0	1	1	0	1	1	1	0	1
1	ODD	X	X	X	1	0	0	1	0	0	2
	EVEN	X	X	X	1	0	0	0	0	0	
2	ODD	X	X	X	0	0	0	0	0	0	
	EVEN	X	X	X	0	0	0	0	0	0	
3	ODD	X	X	X	0	0	0	0	0	1	
	EVEN	X	X	X	0	0	0	0	0	0	
4	ODD	X	X	X	0	0	0	0	0	0	
	EVEN	X	X	X	0	0	0	0	0	0	
5	ODD	X	X	X	0	1	0	0	0	0	
	EVEN	X	X	X	0	0	0	0	0	0	
6	ODD	X	X	X	0	0	0	0	0	0	
	EVEN	X	X	X	0	0	0	0	0	0	
7	ODD	X	X	X	0	0	0	1	0	0	
	EVEN	X	X	X	0	1	1	1	1	0	
8	ODD	X	X	X	0	0	0	0	0	0	
	EVEN	X	X	X	0	0	0	0	0	0	
9	ODD	X	X	X	0	0	0	0	0	0	
	EVEN	X	X	X	0	0	0	0	0	0	
10	ODD	X	X	X	0	0	0	0	0	0	
	EVEN	X	X	X	0	0	0	0	0	0	
END LOAD		1	0	1	1	0	1	1	1	1	1

(1) Code 6E (Hex) will default to the 6-8 LPI switch, Code 6C (Hex) will set the Printer to 6 LPI, Code 6D (Hex) will set the Printer to 8 LPI.

(2) With the format of odd and even tape data words as shown, it is possible to generate an invalid end DAVFU load. It is undesirable then to use 2F (Hex) for a valid tape data word (Data Bits 7 and 8 and Paper Instruction are don't care bits).

X= Don't Care Bit

INTERFACE CONNECTORS

Standard Interface Connector

The standard connector provided with the printer is an AMP 50 pin connector, AMP part number 745646-1. The connector is shown in Figure 5-6. Tables 5-4 and 5-5 show the interface signals and their associated connector pin assignments. No data cable or mating connector is provided with the printer.

Optional Interface Connector

The optional connector is an AMP Type M Series Connector, AMP part number 200277-2. The connector is plug compatible with the Winchester 50 pin MRAC 50 SJ connector. The connector and its associated hardware are shown in Figure 5-7. Tables 5-6 and 5-7 show the interface signals and their associated connector pin assignments. No data cable or mating connector is provided with the printer.

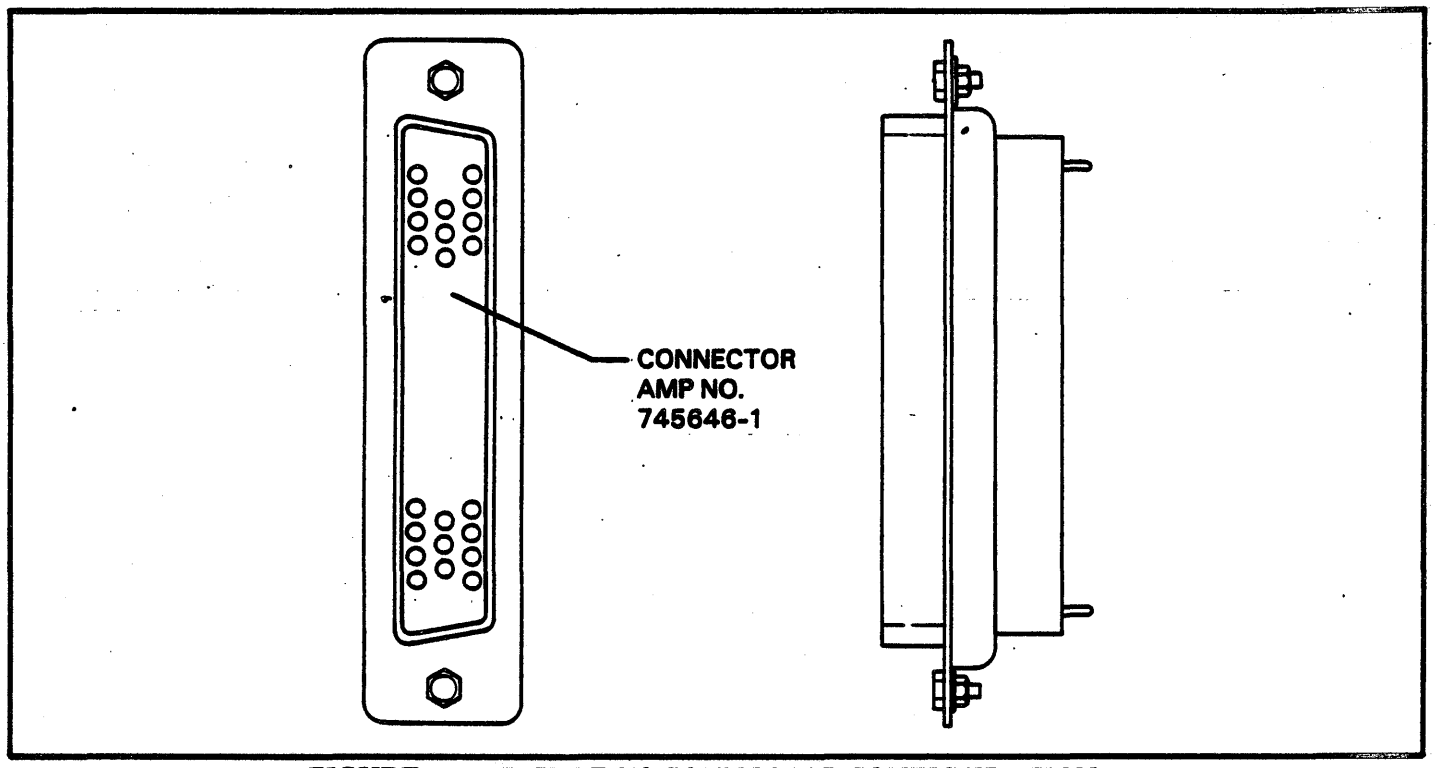

FIGURE 5-6. D-TYPE I/O CONNECTOR CONFIGURATION

TABLE 5-4. D-TYPE I/O CONNECTOR PIN ASSIGNMENTS (SHORT LINE)

PIN NO.	SIGNAL	PIN NO.	SIGNAL
22	+READY	28	+DATA 8
6	-READY RETURN	44	DATA 8 RETURN
21	+ON LINE	46	+INTERFACE VERIFY
7	ON LINE RETURN	45	INTERFACE VERIFY RETURN
23	+DEMAND	24	+TOP OF FORM
7	DEMAND RETURN	8	TOP OF FORM RETURN
38	+DATA STROBE	25	+BOTTOM OF FORM
37	DATA STROBE RETURN	9	BOTTOM OF FORM RETURN
19	+DATA 1	47	+EVFU INSTALLED
3	DATA 1 RETURN	33	EVFU VERIFY
20	+DATA 2	50	+IDENT 0
4	DATA 2 RETURN	32	IDENT 0 RETURN
1	+DATA 3	49	+IDENT 1
2	DATA 3 RETURN	16	IDENT 1 RETURN
41	+DATA 4	31	+BUFFER CLEAR
40	DATA 4 RETURN	15	BUFFER CLEAR RETURN
34	+DATA 5	12	+5 VOLT (TEST ONLY)
18	DATA 5 RETURN	39	5 VOLT (TEST ONLY) RETURN
43	+DATA 6	26 + 48	+VFU RDY
42	DATA 6 RETURN	10 + 17	VFU RDY RETURN
36	+DATA 7	30	+PAPER INSTRUCTION
35	DATA 7 RETURN	14	PAPER INSTRUCTION RETURN

TABLE 5-5. D-TYPE I/O CONNECTOR PIN ASSIGNMENTS (LONG LINE)

PIN NO.	SIGNAL	PIN NO.	SIGNAL
22	+READY	46	+INTERFACE VERIFY
6	-READY	45	-INTERFACE VERIFY
21	+ON LINE	24	+TOP OF FORM
7	-ON LINE	8	-TOP OF FORM
23	+DEMAND	25	+BOTTOM OF FORM
7	-DEMAND	9	-BOTTOM OF FORM
38	+DATA STROBE	47	+EVFU INSTALLED
37	-DATA STROBE	33	-EVFU VERIFY
19	+DATA 1	50	+IDENT 0
3	-DATA 1	32	-IDENT 0
20	+DATA 2	49	+IDENT 1
4	-DATA 2	16	-IDENT 1
1	+DATA 3	31	+BUFFER CLEAR
2	-DATA 3	15	-BUFFER CLEAR
41	+DATA 4	12	+5 VOLT (TEST ONLY)
40	-DATA 4	39	-5 VOLT (TEST ONLY)
34	+DATA 5	26 + 48	+VFU RDY
18	-DATA 5	10 + 17	-VFU RDY
43	+DATA 6	30	+PAPER INSTRUCTION
42	-DATA 6	14	-PAPER INSTRUCTION
36	+DATA 7		
35	-DATA 7		
28	+DATA 8		
44	-DATA 8		

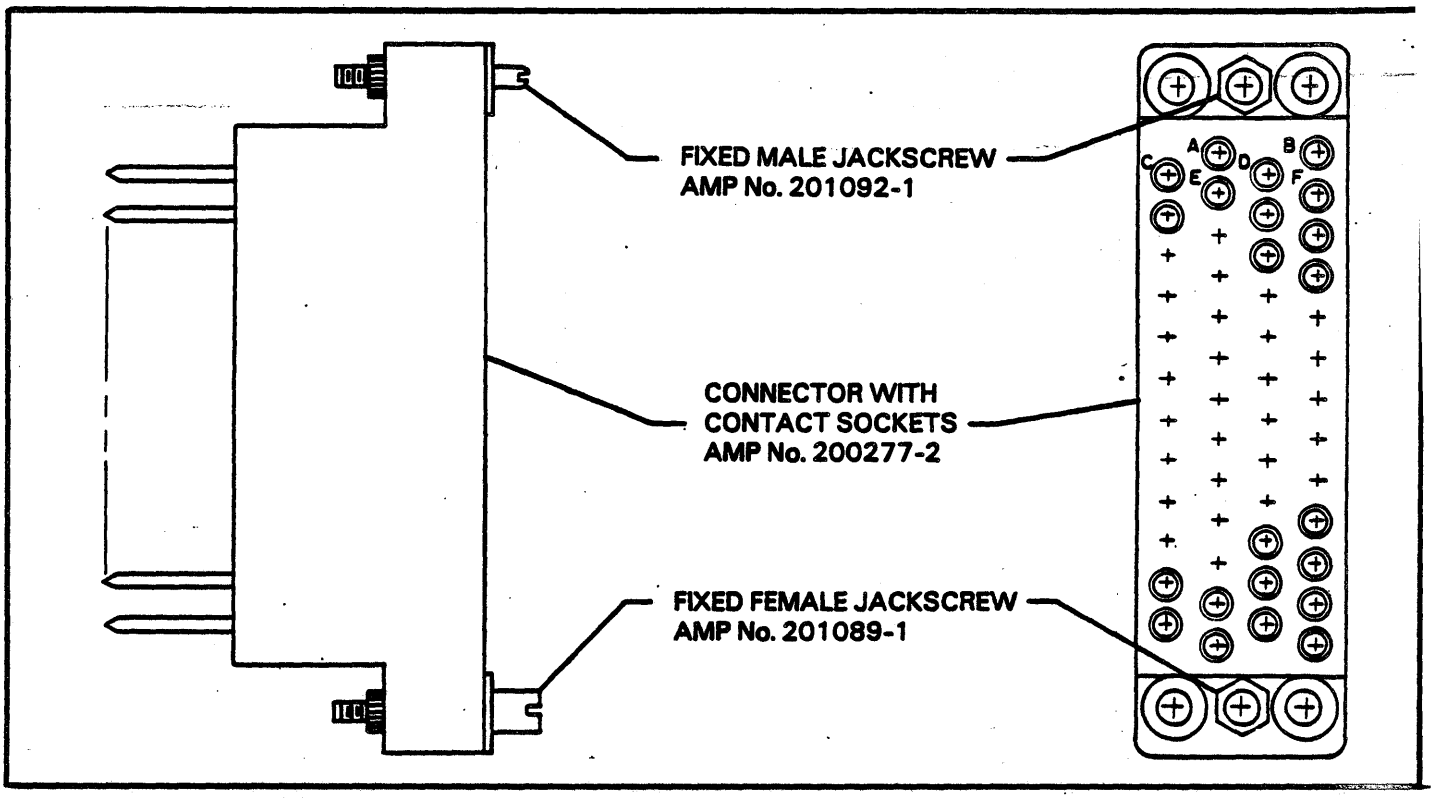

FIGURE 5-7. WINCHESTER TYPE I/O CONNECTOR CONFIGURATION

TABLE 5-6. WINCHESTER TYPE I/O CONNECTOR PIN ASSIGNMENTS (SHORT LINE)

PIN NO.	SIGNAL
CC	+READY
EE	READY RETURN
y	+ON LINE
AA	ON LINE RETURN
E	+DEMAND
C	DEMAND RETURN
j	+DATA STROBE
m	DATA STROBE RETURN
B	+DATA 1
D	DATA 1 RETURN
F	+DATA 2
J	DATA 2 RETURN
L	+DATA 3
N	DATA 3 RETURN
R	+DATA 4
T	DATA 4 RETURN
V	+DATA 5
X	DATA 5 RETURN
Z	+DATA 6
b	DATA 6 RETURN
n	+DATA 7
k	DATA 7 RETURN
u	+DATA 8
w	DATA 8 RETURN

PIN NO.	SIGNAL
v	+INTERFACE VERIFY
x	INTERFACE VERIFY RETURN
S	+TOP OF FORM
U	TOP OF FORM RETURN
M	+BOTTOM OF FORM
P	BOTTOM OF FORM RETURN
e	+EVFU INSTALLED
h	EVFU VERIFY
d	+IDENT 0
f	IDENT 0 RETURN
a	+IDENT 1
c	IDENT 1 RETURN
A	+BUFFER CLEAR
H	BUFFER CLEAR RETURN
HH	+5V (TEST ONLY)
K	5V (TEST ONLY) RETURN
W + FF	+VFU RDY
Y + DD	VFU RDY RETURN
p	+PAPER INSTRUCTION
s	PAPER INSTRUCTION RETURN

TABLE 5-7. WINCHESTER TYPE I/O CONNECTOR PIN ASSIGNMENTS (LONG LINE)

PIN NO.	SIGNAL
CC	+READY
EE	-READY
y	+ON LINE
AA	-ON LINE
E	+DEMAND
C	-DEMAND
j	+DATA STROBE
m	-DATA STROBE
B	+DATA 1
D	-DATA 1
F	+DATA 2
J	-DATA 2
L	+DATA 3
N	-DATA 3
R	+DATA 4
T	-DATA 4
V	+DATA 5
X	-DATA 5
Z	+DATA 6
b	- DATA 6
n	+DATA 7
k	-DATA 7
u	+DATA 8
w	-DATA 8

PIN NO.	SIGNAL
v	+INTERFACE VERIFY
x	-INTERFACE VERIFY
S	+TOP OF FORM
U	-TOP OF FORM
M	+BOTTOM OF FORM
P	-BOTTOM OF FORM
e	+EVFU INSTALLED
h	-EVFU VERIFY
d	+IDENT 0
f	-IDENT 0
a	+IDENT 1
c	-IDENT 1
A	+BUFFER CLEAR
H	-BUFFER CLEAR
HH	+5V (TEST ONLY)
K	-5V (TEST ONLY)
W + FF	+VFU RDY
Y + DD	-VFU RDY
p	+PAPER INSTRUCTION
s	-PAPER INSTRUCTION

SECTION VI
CPU AND PRINT HEAD ELECTRONICS BOARDS

This section contains general information on the CPU board and the Print Head Electronics board. More detailed information will be documented in the following sections.

The CPU board is controlled by an 8085 microprocessor. It works in conjunction with the personality module to set up the printer's configurations and is the "go between" for the printer and the data source. It sends all commands to the Print Head board, which actually controls the action of the printer.

CPU BOARD FUNCTIONS (See Figure 6-1 and 6-2)

The CPU board contains the following major functions:

a. Contains the main microprocessor and program memory.
b. Contains the print buffer and EVFU RAM.
c. Contains the band tracking microprocessor.
d. Provides all clocks and timing.
e. Generates HEP pulses.
f. Provides fault sensing.
g. Provides stepper motor controls.
h. Controls the bus.
i. Generates the compare pulses.
j. Controls the status display.
k. Controls the EVFU.

PRINT HEAD BOARD FUNCTIONS (See Figure 6-3)

The Print Head board contains the following major functions:

a. Provides the drive for both the horizontal and vertical stepper motors.
b. Provides control for the blower.
c. Provides ribbon drive.
d. Provides band drive.
e. Controls the paper clamps.
f. Controls the line counter.
g. Contains the +5V regulator circuitry.
h. Contains the power inhibits circuitry.
i. Contains the character and home pulse sync and the phasing circuitry.

The Print Head board also contains an LED which indicates that +10V is present to the board. This +10V is an input to the +5V regulator.

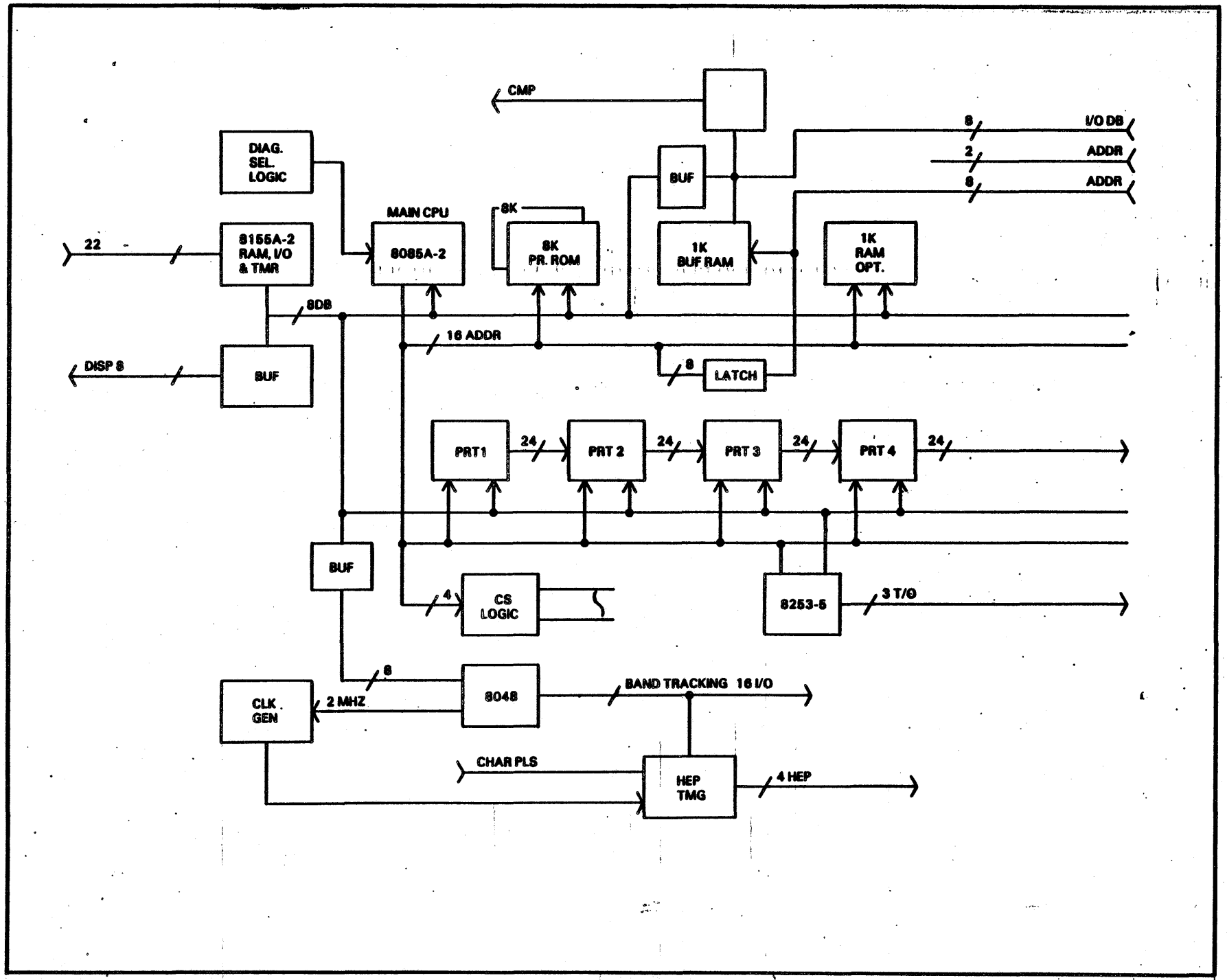

FIGURE 6-1. CPU BOARD (1PC2) BLOCK DIAGRAM

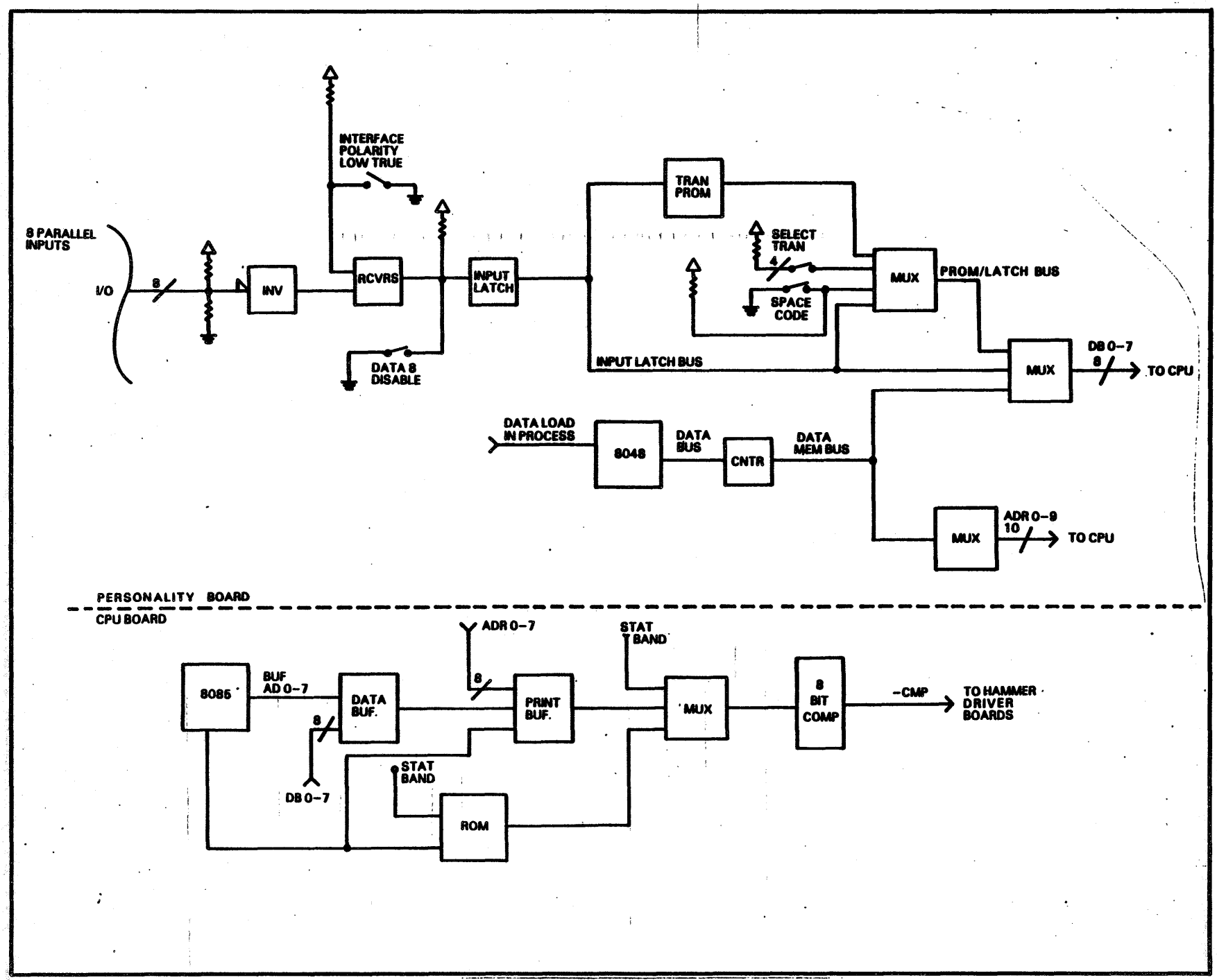

FIGURE 6-2. DATA BLOCK DIAGRAM

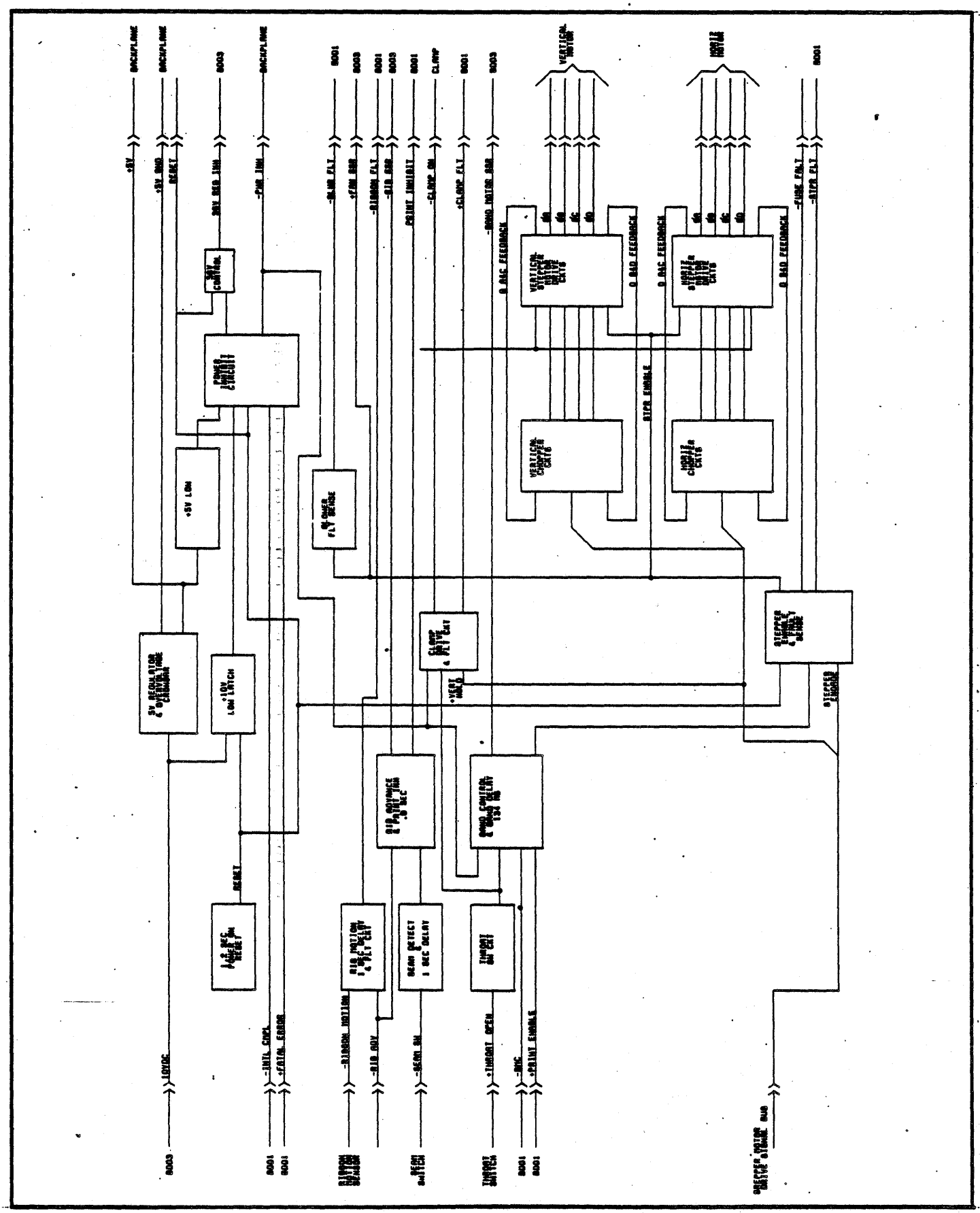

FIGURE 6-3. PRINT HEAD BOARD (1PC3) BLOCK DIAGRAM

CPU BOARD

The CPU board contains a scratch pad RAM (Port 5) and Bus Control (Port 3) in addition to Ports 1, 2, and 4, which are documented in Section 7.

Port 5 (I/O and Scratch Pad RAM)

Inputs to Port 5:

a. Control Panel
b. Band ID
c. Horizontal Reader

Outputs from Port 5:

a. Page Length Identification
b. Configuration Data and Pulse Synchronization
c. Timer Start
d. Fault Indication

Port 3: (Bus Control Signal and Timers)

Inputs to Port 3:

a. Timing Circuits
b. Statistical Band ID
c. EVFU Load Information
d. Status Request

Outputs from Port 3:

a. BSAVL (Bus Available)
b. PRTEN (Print Enable)
c. Paper Control

CPU LED's

There are three LED's installed on the board which provide the ability to observe the Horizontal Hold, Vertical Hold and Printing in Progress (PIP) functions.

LED 1: LED 1 is the right most LED as viewed from the component side of the board and is lit when Horizontal Hold is in progress.

LED 2: LED 2 is the middle LED and is lit when Vertical Hold is in progress.

LED 3: LED 3 is the left most LED as viewed from the component side of the board and is lit when printing is in progress.

There are three switch networks (SWN1 thru SWN3) installed on this board which allow the Customer Engineer the ability to program the printer to various configurations. See the Installation and Checkout Instructions for locations of the switch networks on the CPU board.

Switches

Auto Fine Feed Switch (SWN2, SW3, location F2): The auto line feed DIP switch allows the selection of an automatic line feed upon recognition of a Carriage Return (CR) control code.

132/136 Column Select Switch (SWN3, SW5, location G13): The 132/136 column select DIP switch determines the print line length. This switch must be set before the printer is powered ON since it is only sampled during the Power On initialization sequence. The selection of this switch is based on the hammer configuration of the printer. It would not be possible for the unit to print 136 columns if the printer is equipped with only 66 hammers (132 column printer). It is possible, however, to have the printer print 132 columns (only use 66 of the 68 hammers) if the printer is equipped with 68 hammers (136 column printer) by setting this switch.

Forms Control Select Switches (SWN3, SW1 and SW2, location G13): These two switches determine the paper motion format code and must be set before the printer is powered ON, since they are only sampled during the Power On initialization sequence. The selectable modes are as follows:

a. Forms Length Control Mode (FLC Mode). These two thumbwheel switches on the right side of the Control Panel allow the operator to select the form length in whole inches and fractional inches.

b. I/O Loadable Vertical Format Unit Mode (IOVFU). Vertical format information is loaded into the printer's RAM buffer over the interface lines. The appropriate BOF switch must also be turned ON.

c. Tape Loadable Vertical Format Unit Mode (TLVFU). Vertical format information is loaded into the printer's RAM buffer by adding a tape reader which reads a punched format tape into the printer's RAM buffer. The appropriate BOF switch must also be turned ON.

Refer to the Maintenance Manual (Fault Isolation section) for switch set up on the CPU board. Refer to Section 3 (Vertical Motion Formatting) for additional information on switch functions.

Bottom of Forms Select Switches (BOF Switches) (SWN2, SW1 and SW2, location F2): These two switches select the channel to be used as the Bottom of Forms (BOF) when operating in the optional IOVFU or TLVFU modes. They must be set before the printer is powered ON, since they are only sampled during the Power On initialization sequence. Channels 2, 8, or 12 may be selected as the BOF channel by selecting different combinations of switches.

Slew to Top of Forms (TOF) Select Switches (SWN3, SW8, location G13): This switch allows the paper to advance to or through the Top of Forms position. In one mode the paper will slew through the top of forms to the line count specified in the line counter command. In the alternate mode, the paper slew will stop at the top of form position rather than the specified line count.

Perforation Skip Length Select Switches (SWN3, SW3 and SW4, location G13): These two switches are only active when in the Forms Length Control (FLC) mode and when the APS switch on the Control Panel is turned ON. By configuring these switches to various positions, a 3, 4, 5, or 6 line skip between top and bottom of forms (and over the paper perforations) can be performed. In the optional IOVFU or TLVFU modes, the perforation skip length is determined by the top and bottom of forms channels. Refer to the Maintenance Manual (Fault Isolation section) for switch set up on the CPU board.

Vertical Tab (VT) Select Channel 3 or 4 Switch (SWN3, SW7, location G13): This switch is only active in the optional IOVFU or TLVFU modes and allows a vertical tab (VT) command to select either channel 3 or channel 4 of the EVFU data. If the EVFU data is not loaded, the VT command will generate a channel select (CHSL) error and the printer will perform a single space paper motion. Refer to Table 3-1 for EVFU load format and Table 3-2 for paper motion commands and control codes.

Test Print Mode Select Switch (SWN1, SW9, location top right side): This switch can be set to a special mode which allows special tests for diagnostic routines or a standard mode which allows various test print patterns. The special diagnostic routines are intended for C.E. usage only. This switch should always be left in the standard mode for operator usage. Refer to the Maintenance Manual (Fault Isolation section) for switch set up. See C.E. Diagnostic Routines following for a description of the routines available.

Character Pattern Select Switches (SWN1, SW's 1 thru 8, location top right side): These eight switches allow selection of special diagnostic routines when in the special mode or allow selection of a test print character when in the standard mode.

When the printer is put back into service, these switches should never be left in a position which selects a code whose position on the print band has no character. This could result in band or hammer damage if printing occurs at this character position. Refer to the Maintenance Manual (Fault Isolation section) for switch set up, for the diagnostic routines available and the ASCII character switch positions.

C.E. Diagnostic Routines

When the Test Print Mode Select switch is in the special mode position and when the Configuration Test switch on the Control Panel has not been selected, certain diagnostic routines are available to the Customer Engineer. These tests are selected by activating the appropriate DIP switch on the CPU board. After selecting the desired diagnostic routine, the function may be activated by pressing the Test Print switch on the Control Panel and exited by pressing the switch again. Most fault sensing is suppressed during these routines in order to allow fault diagnosing or set up to occur. The following diagnostic routines are available:

- Sliding Alphabet
- Horizontal Motion (Shuttle)
- Horizontal Set Up
- Vertical Motion (Exercise Vertical)
- Load EVFU
- Display Test
- Run Ribbon and Band (Ribbon/Band Motion)
- Examine Print/EVFU Memory

Sliding Alphabet:

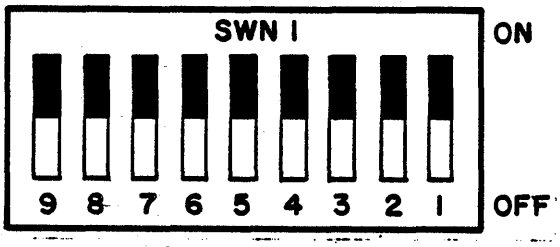

By setting the DIP switches on the CPU board as shown above, a sliding alphabet pattern is printed once the Test Print switch on the Control Panel is pressed. The sliding alphabet pattern will shift on character through the entire code set available on the installed print band.

Horizontal Motion (Shuttle):

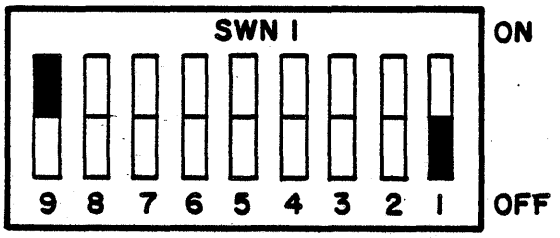

By setting the DIP switches on the CPU board as shown above, the printer exercises the horizontal system only once the Test Print switch on the Control Panel has been pressed. This is a horizontal shifting routine which shifts the hammer bar left to right and right to left.

Horizontal Set Up:

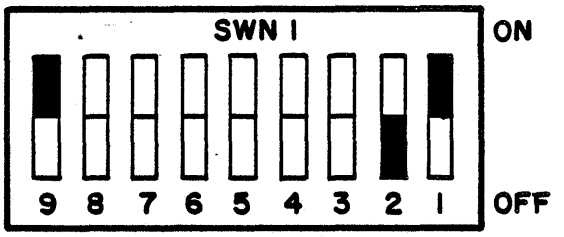

By setting the DIP switches on the CPU board as shown above, a horizontal set up routine is activated and may be used as an aid in the adjustment of the horizontal shift system once the Test Print switch on the Control Panel is pressed.

The first depression of the Test Print switch places the horizontal four phase stepper motor on phase A of its sequence. Subsequent depressions of the Test Print switch places the stepper motor in each of the possible full step positions (phases A, B, C, D, A', B', and C'), and some of the half step positions (phases AB and DA'). The actual phase or phases are displayed on the Control Panel's display. The phase position (A, B, C, etc.) is alternately displayed with the horizontal position transducer level (HOME or NHOM). The position C' represents the right most position of the hammer bar which is used in the compressed pitch mode. The next depression of the Test Print switch will cause the routine to be exited. Refer to the Hammer Bar Home Position Adjustment Procedure in Section 4 of the Maintenance Manual for further information.

Vertical Motion (Exercise Vertical):

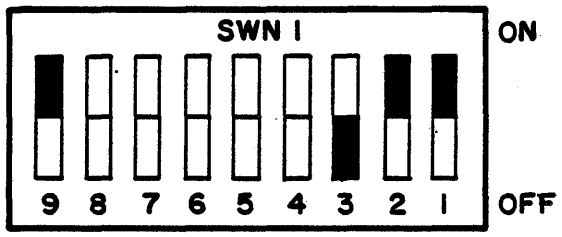

By setting the DIP switches on the CPU board as shown above, the printer will exercise the printer's vertical paper motion system in one of two modes once the Test Print switch on the Control Panel has been pressed.

a. If the EVFU is not loaded, successive single line feeds will be performed.
b. If the EVFU is loaded, a vertical slew to each channel loaded will occur with a printout of that channel selected at that line.

Load EVFU:

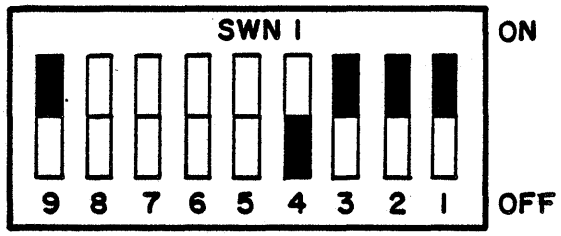

By setting the DIP switches on the CPU board as shown above, the printer will load a "canned" program into the EVFU memory once the Test Print switch on the Control Panel has been pressed. This routine loads all channels into EVFU memory on half inch paper intervals. Starting with channel 1, each channel is loaded into memory and the selected BOF (bottom of forms) channel is positioned appropriately. Once this load is complete, the LVFU (Load VFU memory) status displayed on the Control Panel is no longer displayed.

If the EVFU mode is not selected (SWN3, SW's 1 and 2) before executing this diagnostic, a NOLD (No Load) status will be displayed on the Control Panel for two seconds.

An On Line operation immediately after executing this diagnostic should not be attempted since the EVFU data may not be appropriate. The printer should be powered OFF prior to an On Line operation after using this diagnostic to erase the "canned" EVFU program.

Display Test:

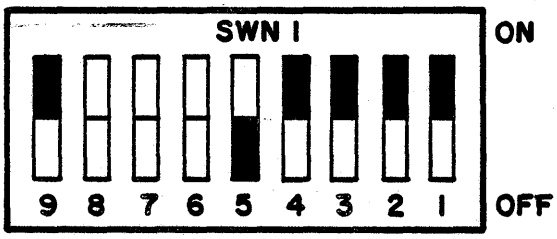

By setting the DIP switches on the CPU as shown above, the printer will enter a test routine which exercises the Control Panel's diagnostic display once the Test Print switch has been pressed. Once the switch is pressed, all sixteen segments of the alphanumeric display will light. Pressing the switch again will blank the display until the switch is released, at which point the normal status of the printer will be displayed.

Run Ribbon and Band (Ribbon/Band Motion):

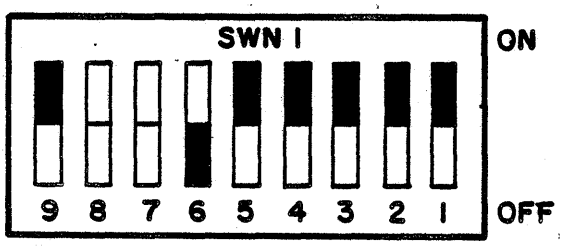

By setting the DIP switches on the CPU board as shown above, the printer will enter a routine which activates only band and ribbon motion once the Test Print switch on the Control Panel is pressed. Since faults are ignored by the printer, this routine may be used for fault diagnosing or adjustments.

Examine Print/EVFU Memory:

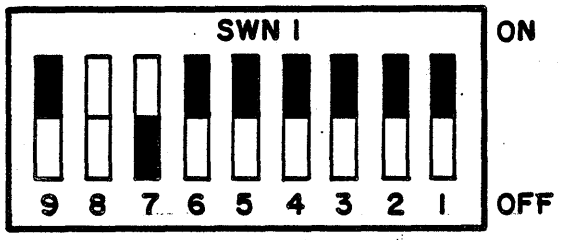

By setting the DIP switches on the CPU board as shown above, the printer enters a routine which allows either the print buffer memory or the EVFU data memory to be examined and displayed on the Control Panel's diagnostic display once the Test Print switch on the Control Panel is pressed.

The diagnostic display will alternately display "EVFU" and "BUFR." Depression of either the Form Feed switch or the Single Cycle switch while the selected memory segment (EVFU or BUFR) is displayed will cause the printer to enter the read memory mode of the selected segment. In this mode the left two digits of display will provide the address of the memory location. The right two digits of the display will provide the hexidecimal representation of the data in memory.

When the print buffer (BUFR) is the selected segment, the address range is 00H to FFH. When the EVFU memory (EVFU) is selected, the address range is from 00H to 162H. Since the left two digits cannot display this range of addresses, the period of each digit will be lit when the EVFU address increments above FFH. The period will be displayed up to the maximum address of 62H which allows addressing up to 355 bytes of EVFU memory. The address may be incremented by pressing the Single Cycle switch or decremented by pressing the Form Feed Switch. Holding either switch down for more than .5 seconds will cause the routine to enter the auto increment/decrement mode, which will stop as soon as the switch is released.

SECTION VII
VERTICAL AND HORIZONTAL SYSTEMS

This section contains detailed information on the electronics required for vertical and horizontal movement. It also contains the control and drive circuits plus the drive mechanisms themselves.

CONTROL SIGNALS (from CPU Board)

Software of Port 2

Vertical Inputs to Port 2:

a. Forms Control Select (switches)
b. Perforation Skip Select (switches)
c. Out of Paper (OOP)

Vertical Outputs from Port 2:

a. Phases A through D
b. Vertical Hold
c. Vertical 2 phase motor
d. PIP (Printing in Progress)

Horizontal Inputs to Port 2:

a. Bus information

Horizontal Outputs from Port 2:

a. Phases A through D
b. Horizontal Hold
c. Horizontal 2 phase motor.

Port 1

Inputs to Port 1:

a. 360 or 720 LPM Configuration
b. PMV CLR (Paper Motion Verification Clear)
c. Auto Line Feed (switch)
d. Slew To or Slew Through Top of Form (switch)
e. 132 or 136 column select (switch)

Outputs from Port 1:

a. Bus information

Port 4

Inputs to Port 4:

a. Bottom of Form select (switches)
b. Page Length select (switches)
c. Vertical Format Unit Channel

Outputs from Port 4:

a. Vertical Format Unit motor control
b. Test Print Pattern select information

STEPPER MOTORS

The vertical and horizontal stepper motors used in this printer are identical. They move in 1.8 degree increments. It takes 200 steps for the motors to achieve a complete revolution (360 degrees).

For vertical motion to occur, it requires 32 steps of the motor for the paper to advance 1/6 inch (6 lines per inch), and 24 steps of the motor for the paper to advance 1/8 inch (8 lines per inch). See the Timing Diagrams in the logic schematics for timing relationships.

DRIVE SIGNALS (From the Print Head Electronics board)

The combination of two phases Horizontal Hold and Vertical Hold plus Band On allows the Stepper Enable signal to occur. The Horizontal or Vertical two phase signals and the Hold signals are routed through a Hybrid SMCC (Stepper Motor Constant Current) to one-shots (69 us for Horizontal, 35 us for Vertical) then they are "anded" with a motor phase and Stepper Enable. The output of this circuitry is applied to drive transistors for the vertical and horizontal drive motors. The drive transistors then feed back to the Hybrid SMCC.

Phases A and C or B and D of the Vertical or Horizontal Phase signals are always "anded" to give one of the signals required for the Stepper Enable signal. This can be monitored at TP10 on the Print Head Electronics board.

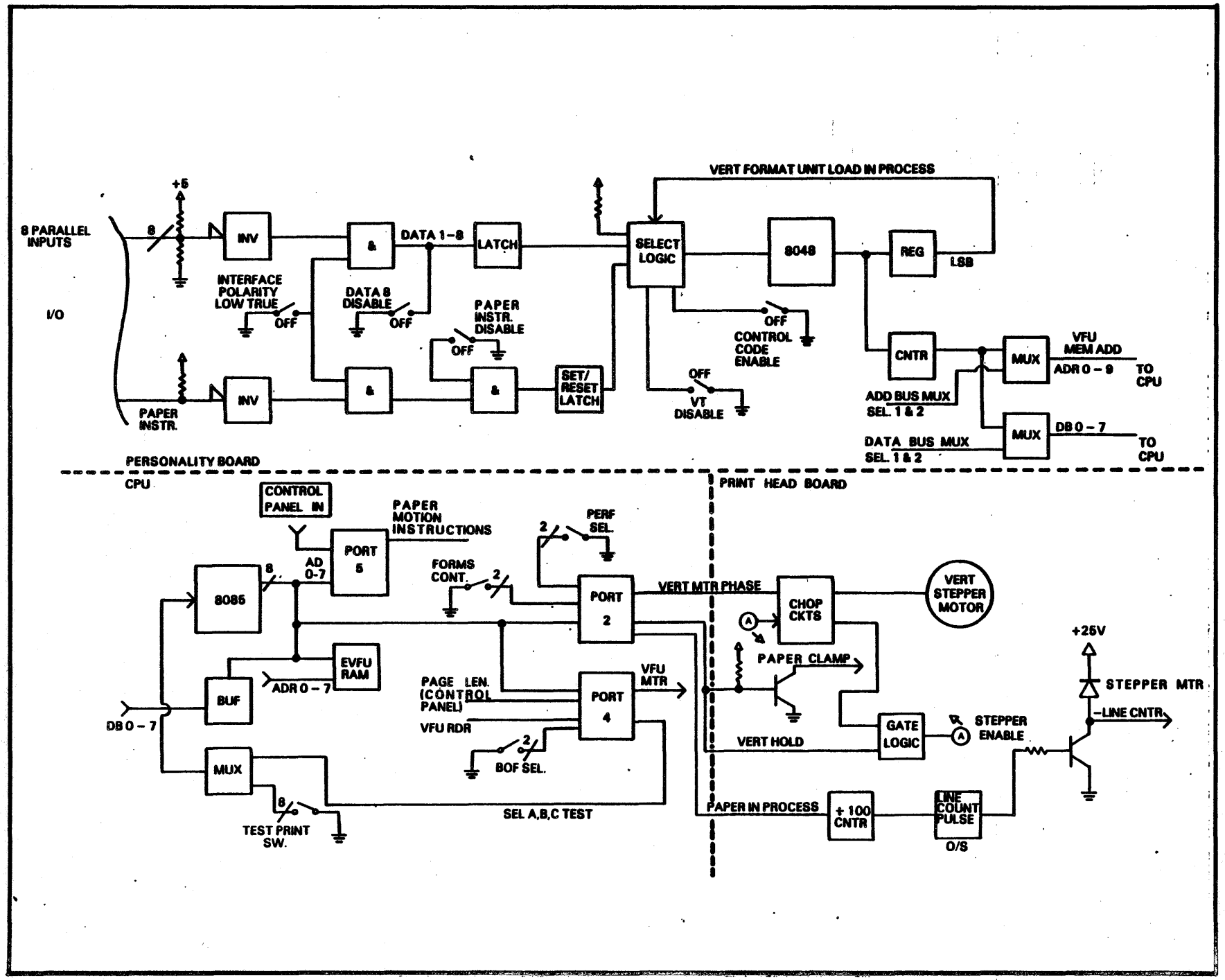

FIGURE 7-1. VERTICAL ADVANCE BLOCK DIAGRAM

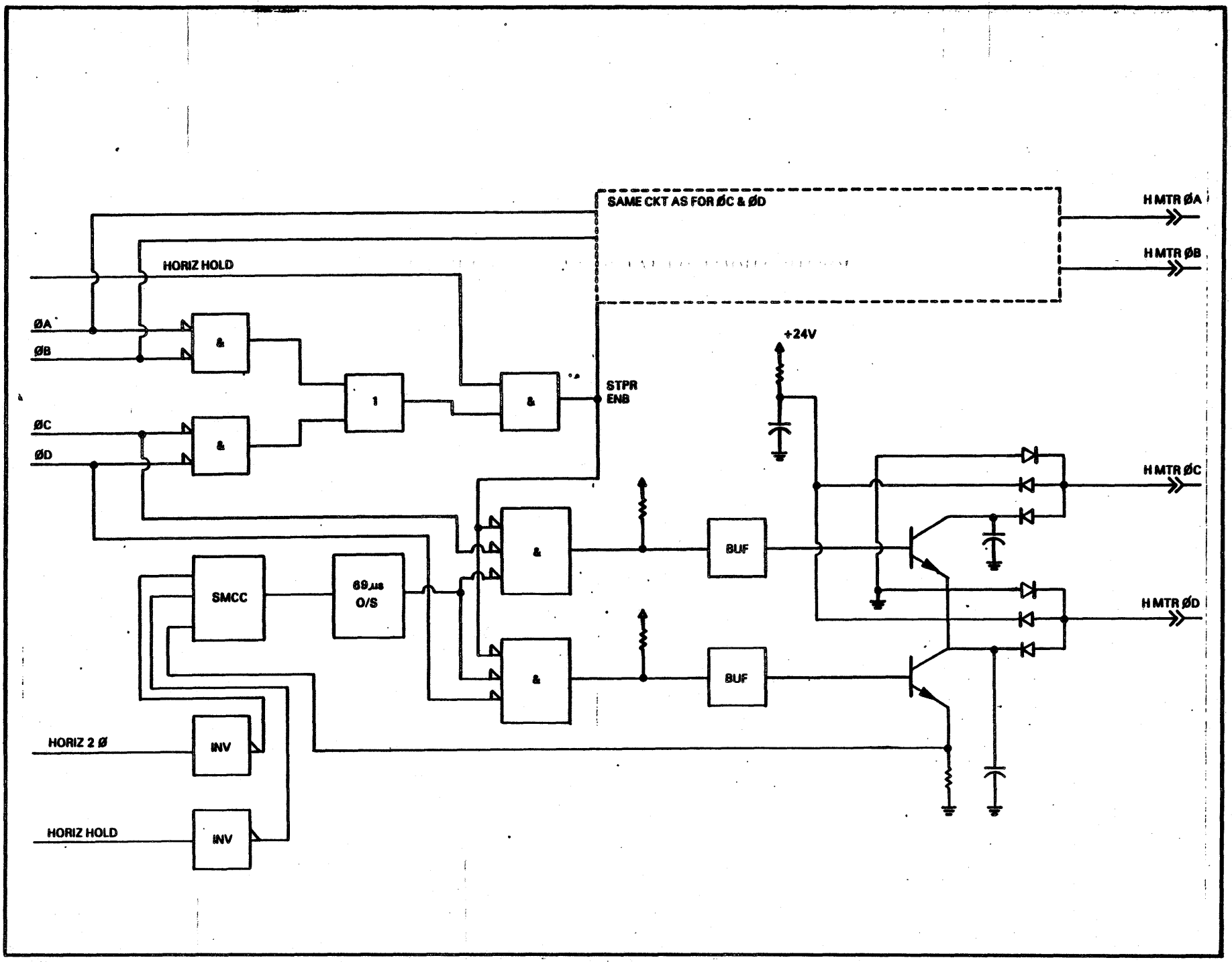

FIGURE 7-2. HORIZONTAL POSITION CONTROL

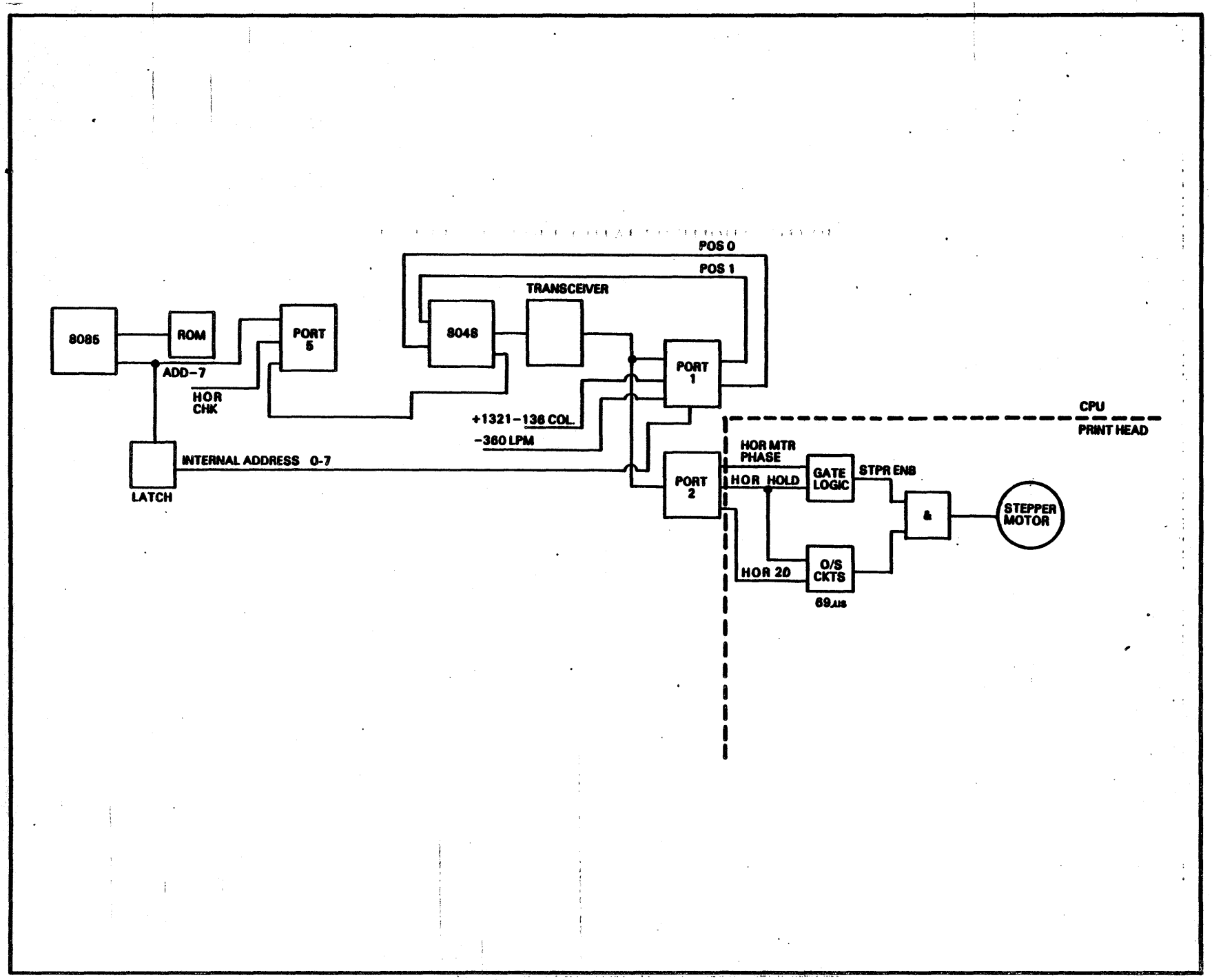

FIGURE 7-3. HORIZONTAL BLOCK DIAGRAM

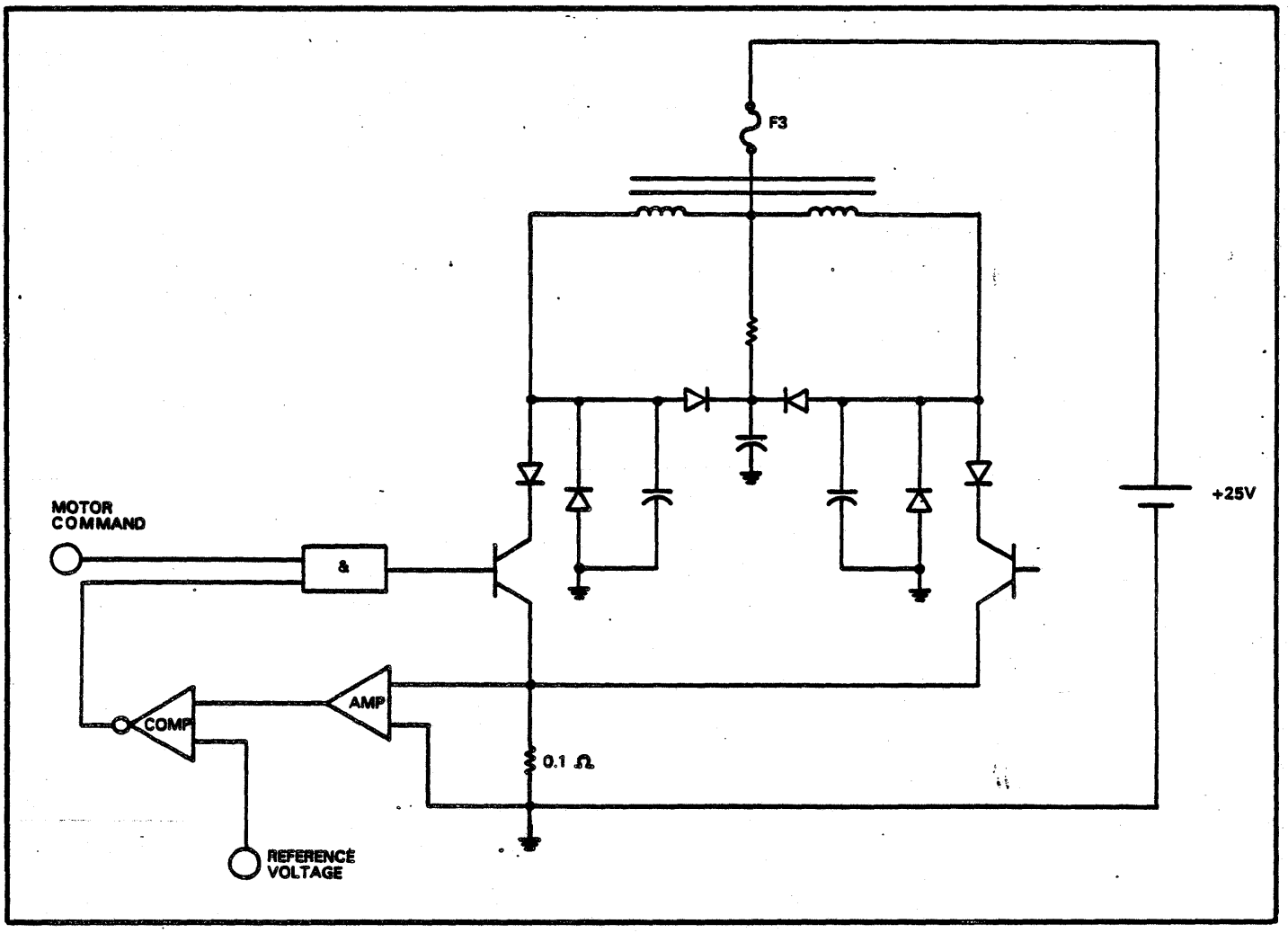

FIGURE 7-4 STEP MOTOR DRIVE ELECTRONICS

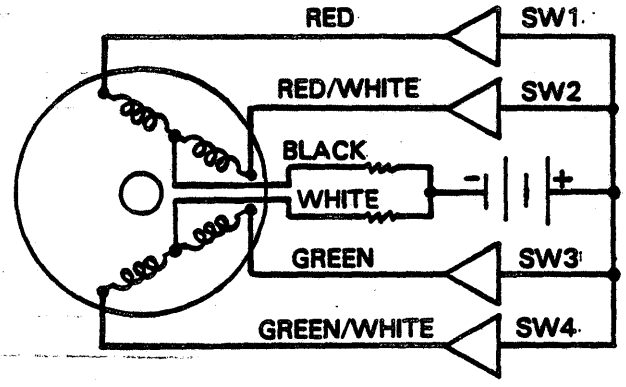

STEP	SW1	SW2	SW3	SW4
1	ON	OFF	ON	OFF
2	ON	OFF	OFF	OFF
3	ON	OFF	OFF	ON
4	OFF	OFF	OFF	ON
5	OFF	ON	OFF	ON
6	OFF	ON	OFF	OFF
7	OFF	ON	ON	OFF
8	OFF	OFF	ON	OFF
1	ON	OFF	ON	OFF

FIGURE 7-5. STEPPER MOTOR 8 STEP SEQUENCE

SECTION VIII
BAND AND RIBBON SYSTEMS

This section contains information on the band (band timing signals, band tracking) system and the ribbon system.

The print band is the key to all the timing in the printer. The band speed must be sensed by the printer in order to properly sequence hammer firing. The printer must also sense the number of characters in the font on the band so that the proper number of ASCII codes can be generated. The number of home marks or statistical font identification marks on the band must be identified in order to set up either standard or compressed pitch and the proper print speed. The printer uses this control derived from the band for the print sequence to control ribbon motion.

PRINT BAND CONTROL

The print band is designed to be operator changable which allows maximum character set flexibility. The band is driven by an AC synchronous motor at a rate of 120 inches per second. The positions of the characters on the band is monitored through a band sensor assembly and raised lines on the band. The raised lines below the characters are character pulses. There is one line beneath every character on the band. The raised line(s) above the characters are home pulses and identifies the band two ways:

1. The line or lines above the characters identifies the beginning of each font or set of characters on the band. The character sequence of each font is identical (unless a statistical band is installed).

2. The line or lines above the characters identifies the band as a standard band, compressed pitch band or statistical band. Standard bands have one line above the beginning of each font, compressed pitch bands have two marks, statistical bands have three or more marks.

Character pulses control band speed, home pulses control band detected. Band control is achieved by employing an 8748/8048 microprocessor chip on the CPU board. An 8255A-5 programmable interface (on the CPU board) uses signals from the 8748/8048 and the 8085A-2 (both on the CPU board) to provide BMC (band motor control), RIB ADV (ribbon advance), and an input to statistical sequencing. See the timing diagrams and logic schematics.

Outputs from 8748/8048:

a. BMSE
b. BSE
c. Band 2^0
d. Band 2^1
e. Band Detected
f. Bus line from 8085A-2

Inputs to 8748/8048:

a. Pre Character Pulses
b. Print Enable
c. Home Sync Pulse
d. Pos 1
e. Pos 0
f. BMC (feedback)

RIBBON CONTROL

The ribbon cassette and its rollers are operator changable. Ribbon motion is achieved by an AC unidirectional motor which is started by a signal from the 8255A-5 chip, Port 1 as a result of the Print Enable signal. Ribbon motion stops 900 msec (approximately 1 second) after printing is complete. Ribbon motion and presence of ribbon is detected by a sensor which consists of a rotor and hall effect switch, housed in the pressure roller assembly.

The useful ink life of the ribbon is 400,000 lines when printing a typical field pattern (400,000 lines is equivalent to $18X10^6$ characters).

Ribbon jams are minimized by the use of a resonator on the right side of the cassette which allows the ribbon to "float" off of the bottom of the cassette thereby yielding smooth ribbon delivery.

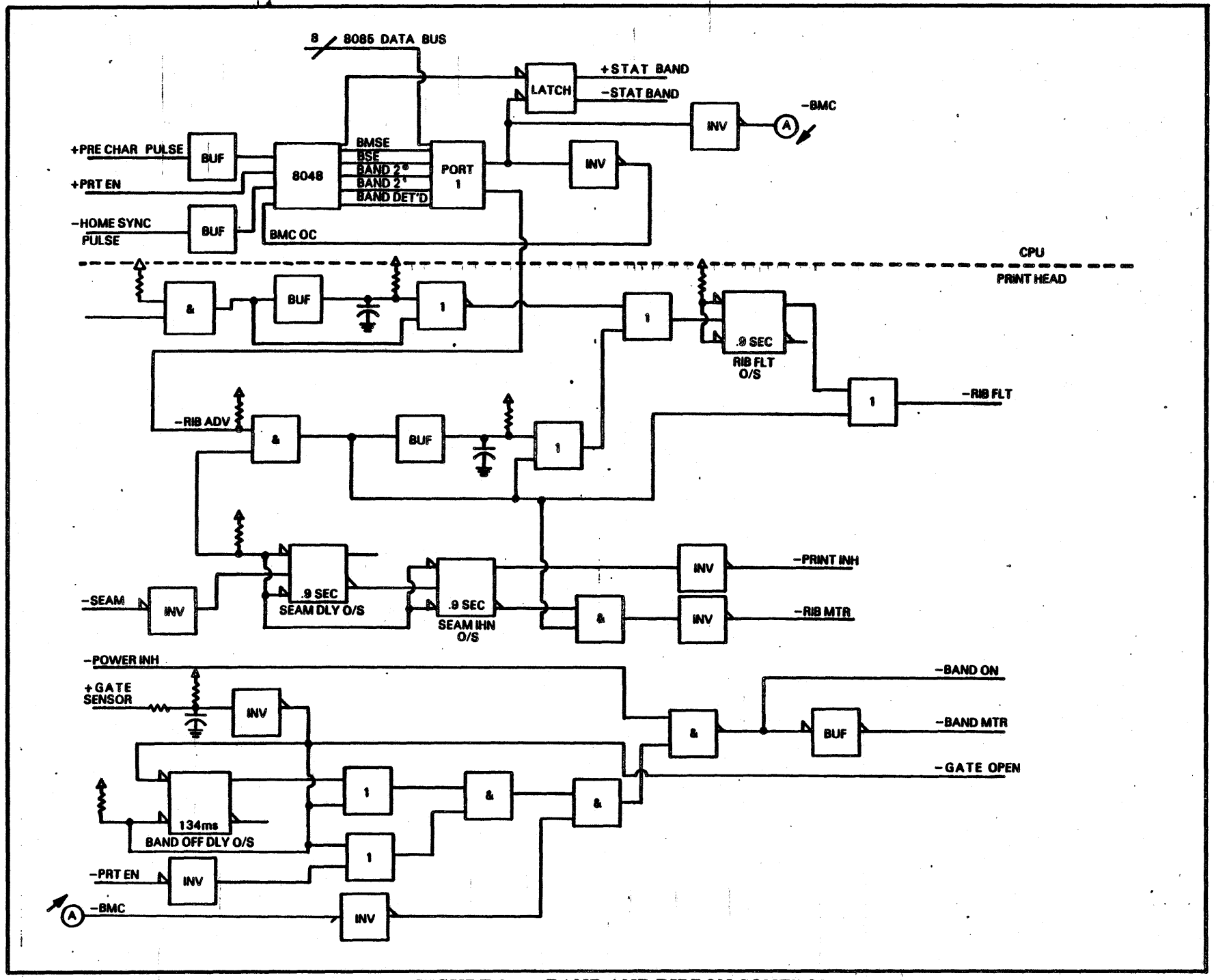

FIGURE 8-1. BAND AND RIBBON CONTROL

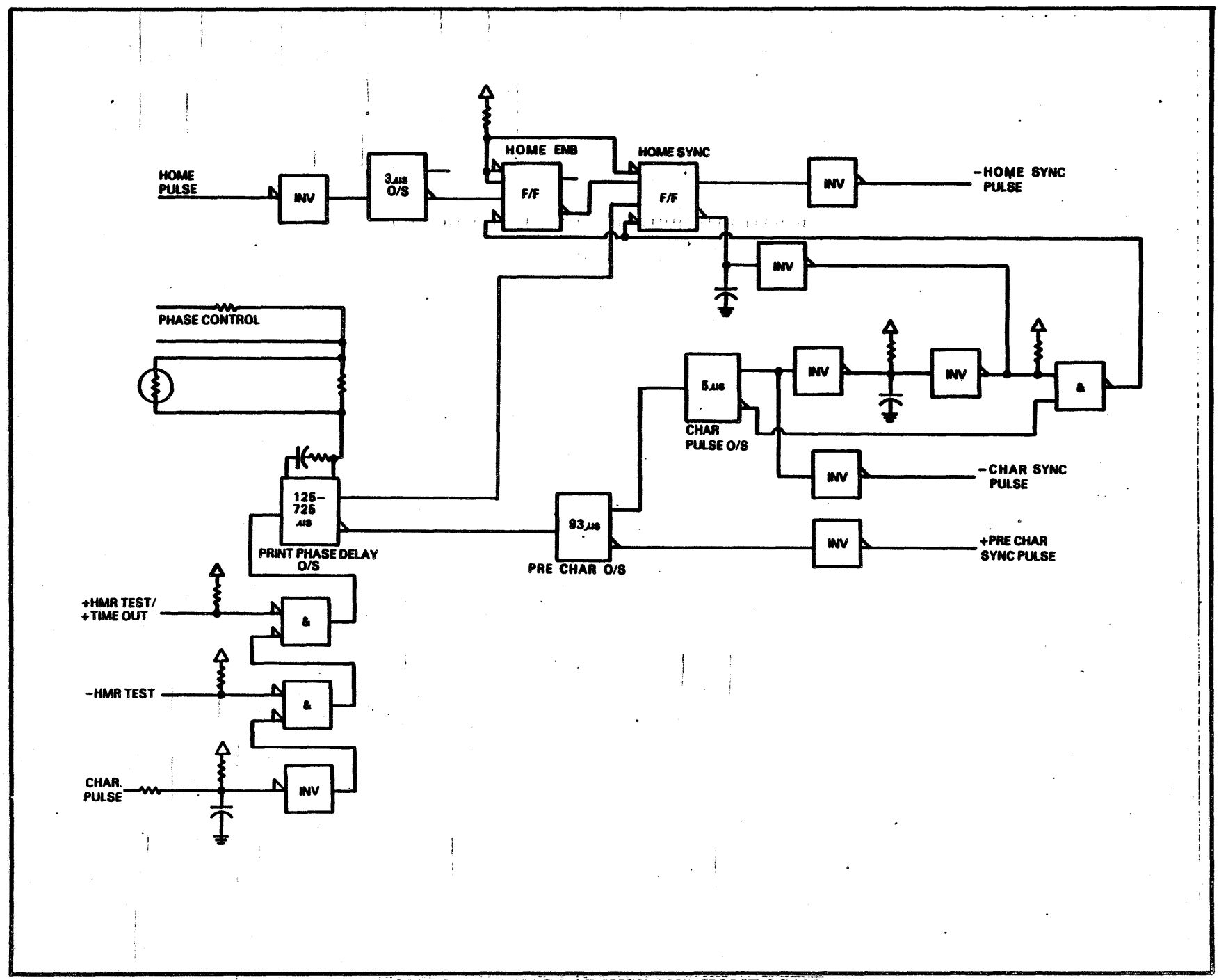

FIGURE 8-2 PHASE ADJUST AND HOME SCAN

SECTION IX
HAMMER DRIVER BOARD AND HAMMER MODULE ASSEMBLIES

This section contains detailed information on the hammer bank components and Hammer Driver Board functions and signals required to fire hammers.

PRINT HAMMER SYSTEM

This printer uses a time-shared linear hammer technology to print a line of data by shifting the hammer bar left and right with a stepper motor. This shifting of the hammer bar allows each hammer to print more than one column. Each hammer prints two columns in standard pitch mode, and three columns in compressed pitch mode. The stepper motor shifts the hammer bar in .100 inch increments when operating in the standard pitch mode, and .066 inch increments when operating in the compressed pitch mode. See Figure 9-1.

The print hammers are mounted in removable modules on the hammer bar with four hammers per module for 136 column (68 hammers) machines. For 132 column (66 hammers) machines there are four hammers per module except for the end module, which only has two hammers. See Figure 9-2.

A hammer bank and actuator assembly is located behind the hammer module mounting bar. This assembly contains the actuators and push rods that drive the print hammers. For each hammer there is one pushrod and one actuator assembly. Each actuator assembly is composed of an actuator, a striker, a coil and a pushrod. The coil is controlled by a hammer driver circuit located on the hammer driver board. When the coil is energized by the drive circuit, it attracts the actuator, propelling the striker forward. The striker propels the pushrod forward against a spring loaded hammer. The hammer is then driven forward against the paper, ribbon and print band to print the character. Upon impact, the hammer rebounds to its original starting position. Its oscillations are dampened by the hammer return spring. The hammer is brought to a complete rest by the spring before the next firing time of the hammer. See Figure 9-3 and 9-4.

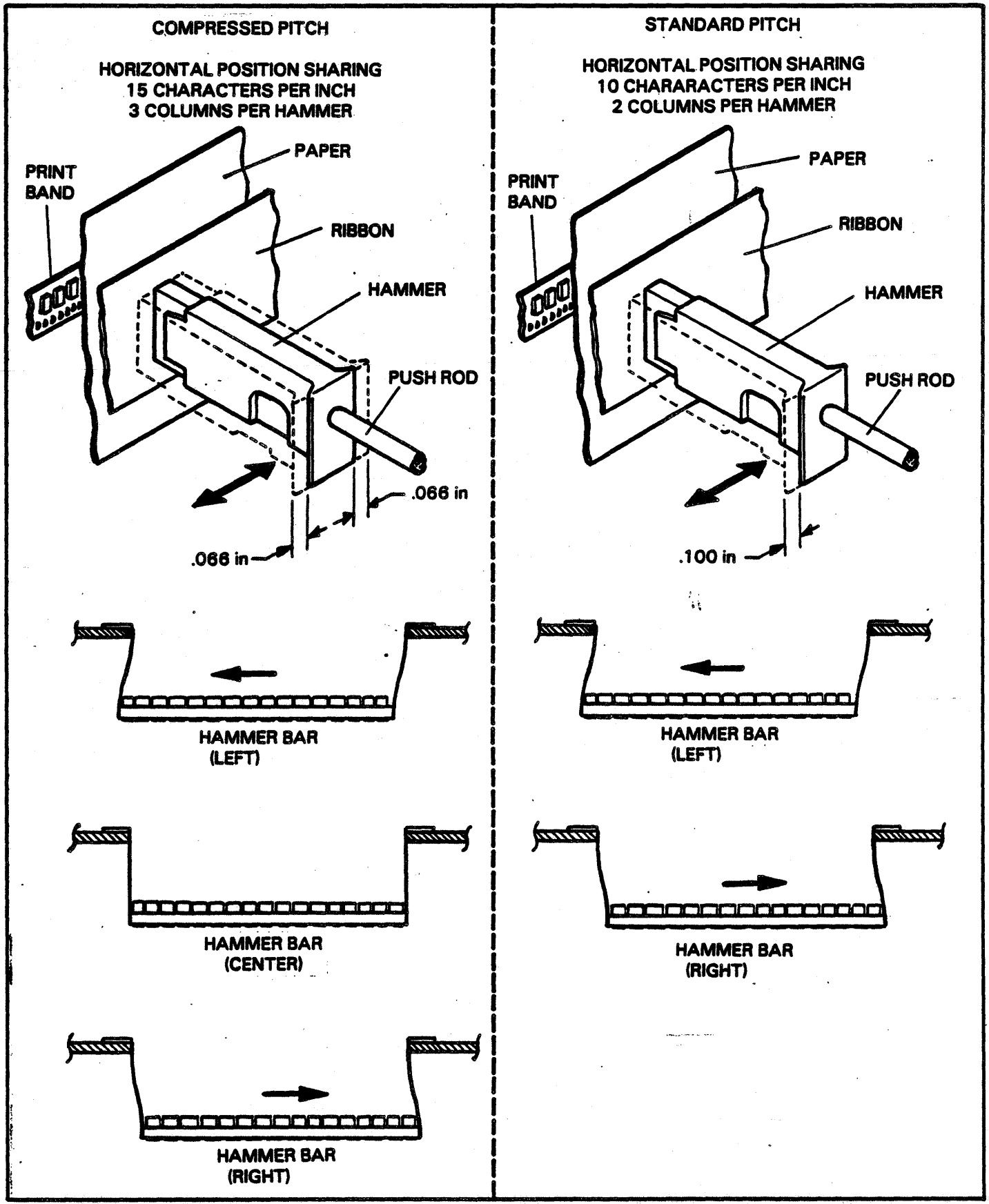

FIGURE 9-1. HORIZONTAL HAMMER POSITION SHARING

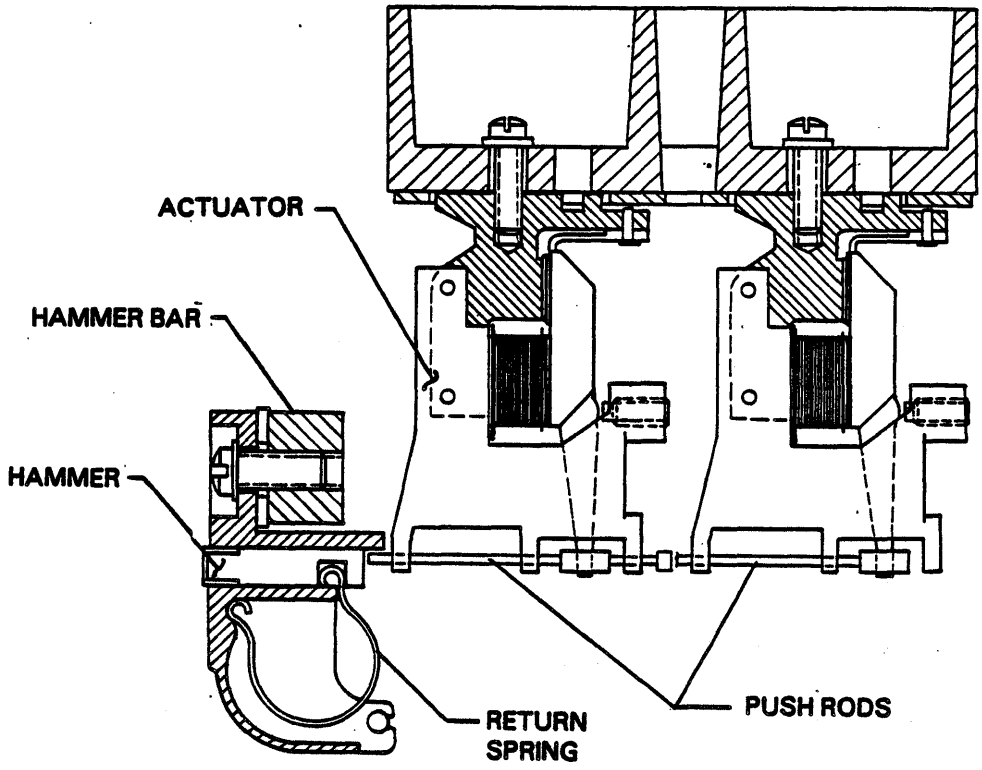

FIGURE 9-2. HAMMER BANK COMPONENTS

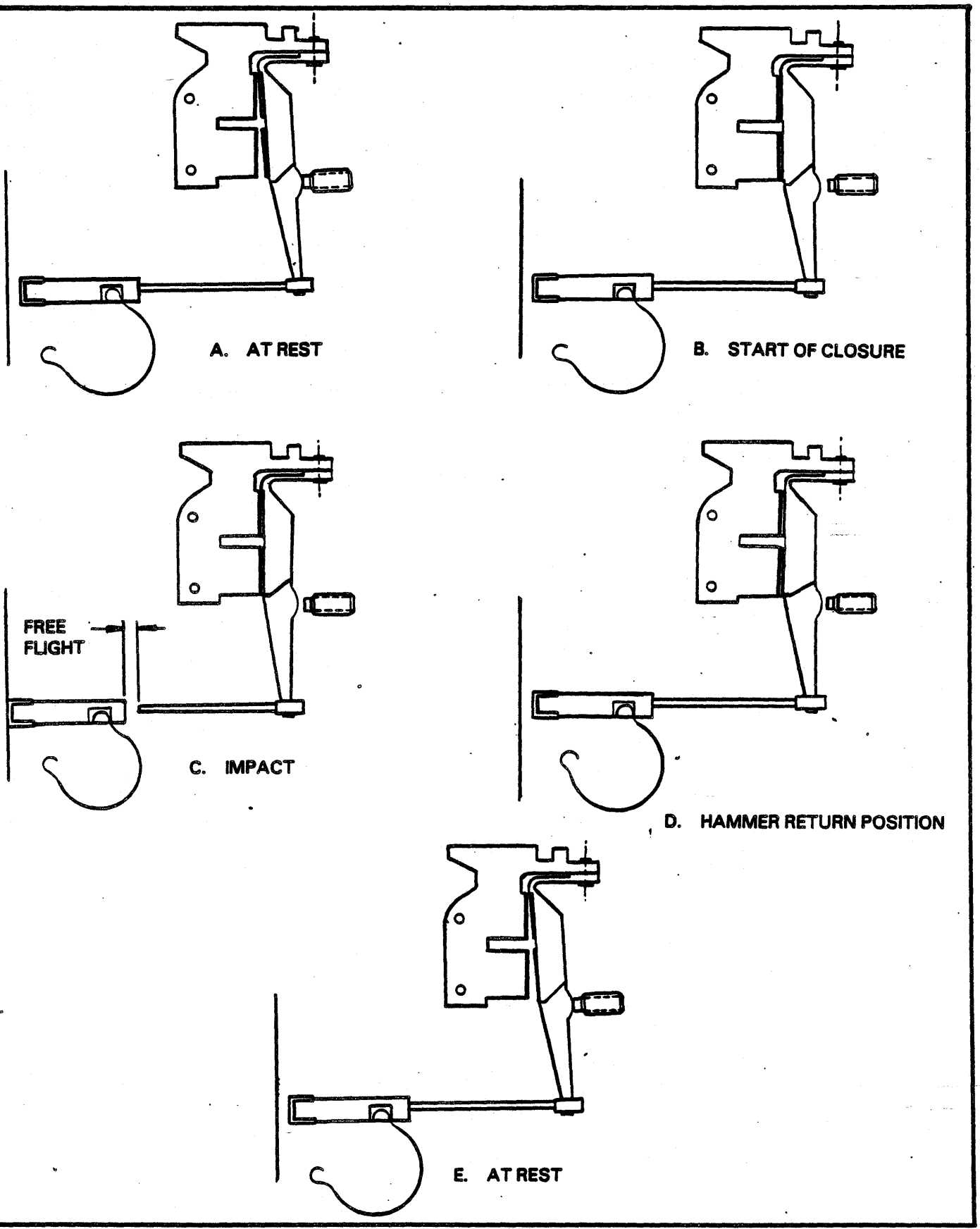

FIGURE 9-3. HAMMER PRINTING CYCLE

PRINT HAMMER SCHEMATIC

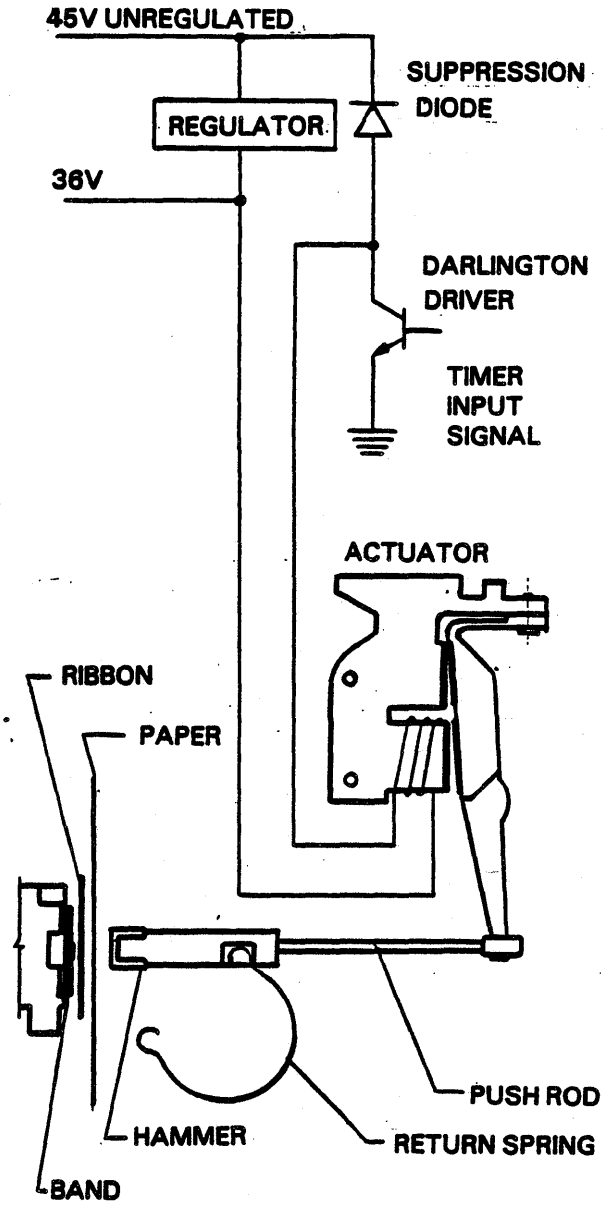

FIGURE 9-4. PRINT HAMMER SCHEMATIC

HAMMER DRIVER BOARD

The hammer driver circuits control the operation of the actuator assemblies which drive the print hammers forward. There are 68 driver circuits contained on this board. With a column capacity of 136 columns (two horizontal positions of 68 hammers), each driver circuit operates an actuator. When a smaller column capacity is used (132 columns with 66 hammers), two load resistors are installed on the hammer driver board connectors for the last columns not used. Two resistors are necessary because each hammer prints two columns.

The hammer driver board also provides the +36V regulator circuitry. This circuitry converts the +50V input power to the board to a regulated +36V with over/under voltage protection. The under voltage limit is +33V, the upper voltage limit is +39V. If voltage variances occur beyond these limits, the printer will crobar (lose its +36V supply). If the printer does crobar, the +36V can be restored by powering the printer OFF then ON.

There is a paper motion verification (PMV) circuit on this board which senses the movement of paper. The sensor is located on the inner throat plate and serves two functions: Paper motion sensing and out of paper (OOP) sensing. This PMV sense circuitry sends an output pulse from a hall effect sensor generated by a rotating wheel moved by the motion of the paper. Paper must move within 2.6 MSEC. If paper does not move within this time period, a fault condition (FRMS) will occur. This circuitry is only active when the printer moves, or tries to move paper.

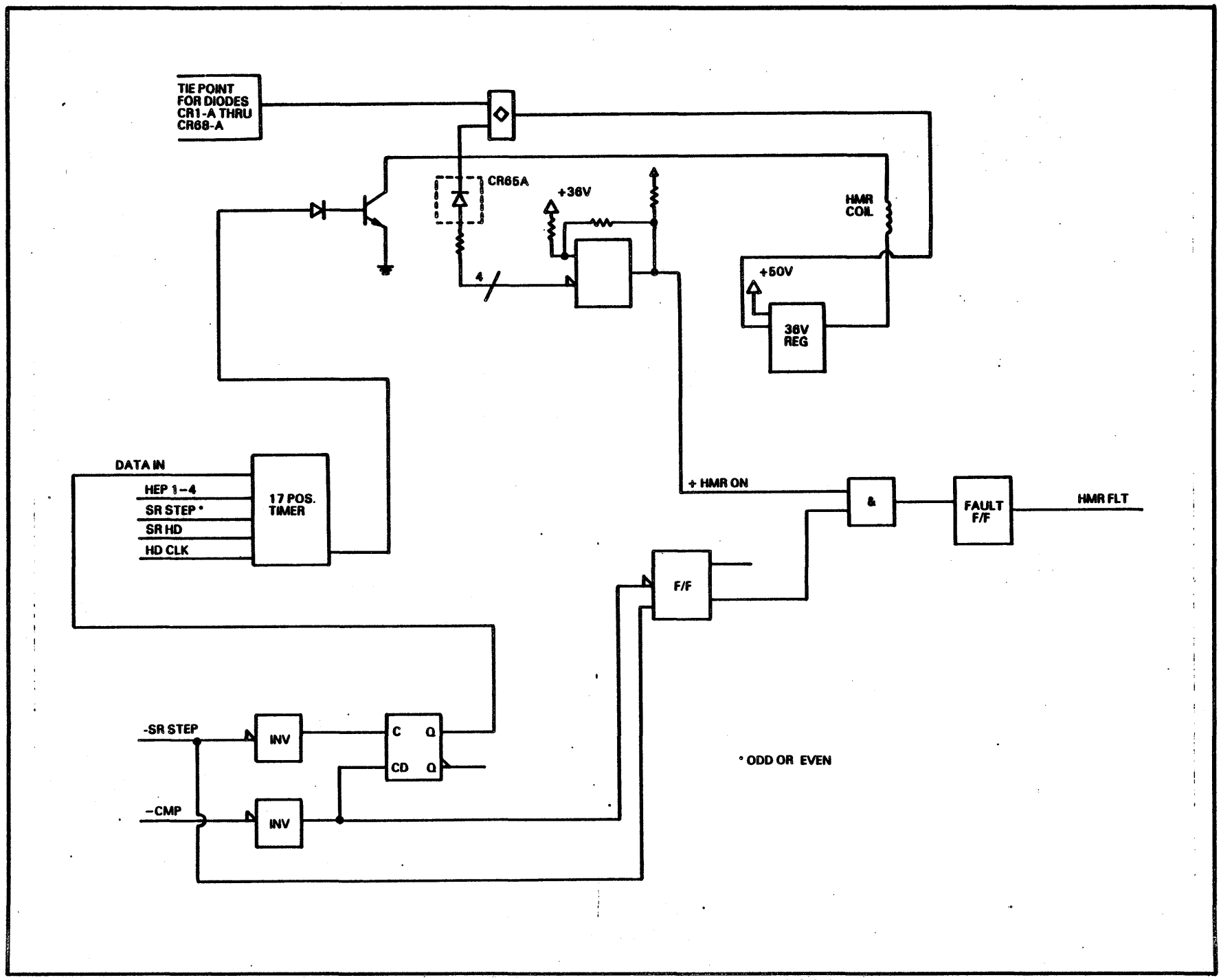

FIGURE 9-5. HAMMER DRIVER BLOCK DIAGRAM

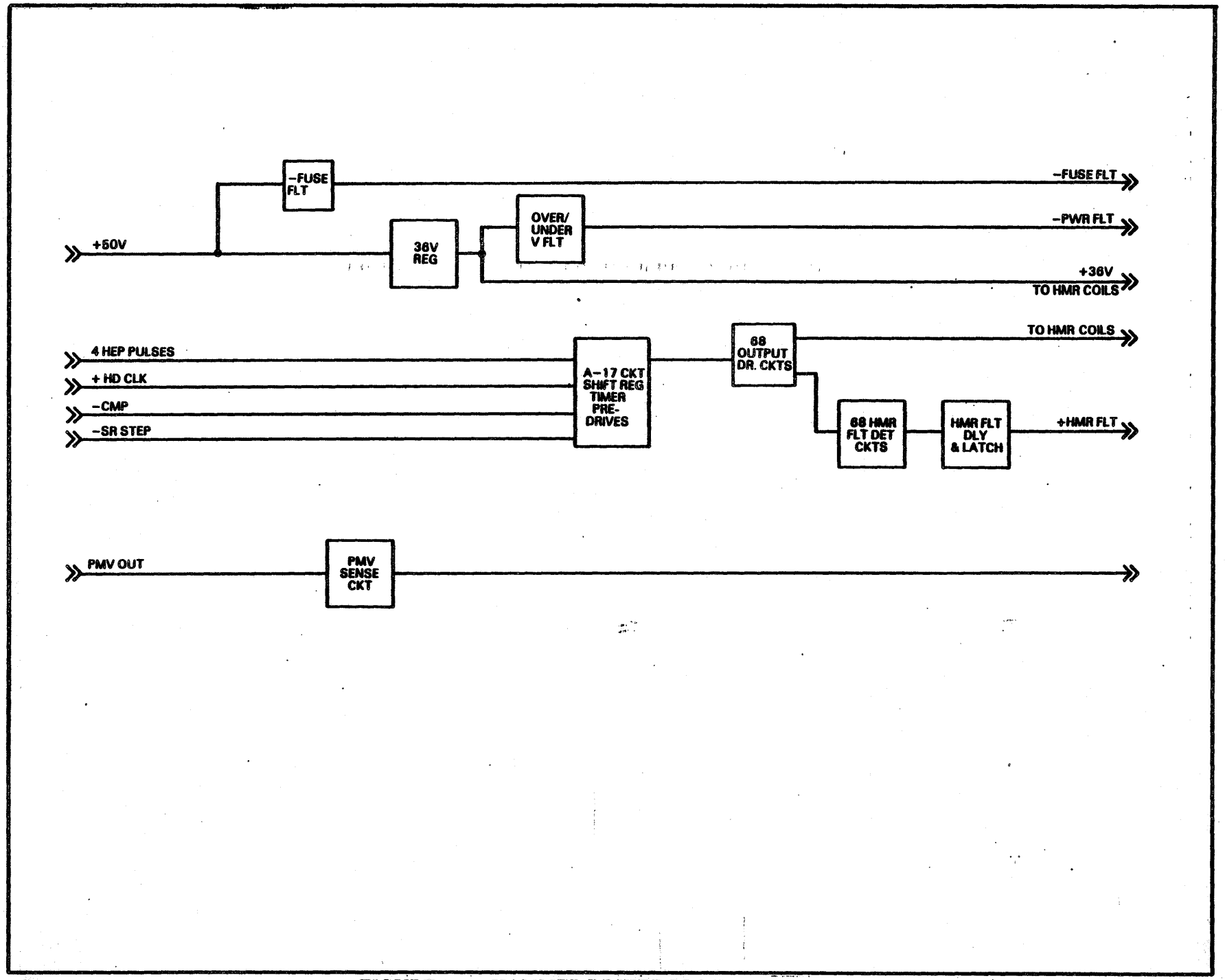

FIGURE 9-6. HAMMER DRIVER BLOCK DIAGRAM

HAMMER FIRING

A print cycle can be started once the printer has loaded a line of data, recognized a character pulse, and a compare timing sequence has been completed. A compare timing sequence is completed between every character pulse on the band. Its function is to load the hammer driver shift register with compares between the memory data code and the character generator (or Image ROM if using a statistical band). See Figure 9-10.

During a compare timing sequence, every other memory location depending on the current position of the hammer bar (either odd columns or even columns) is compared to a code generated by a character generator. A character generator simulates band character codes for every character on the band. This sequence is repeated for every font (or sets of characters) on the band. At the beginning of every simulated font, the character generator is reset to a predetermined count: 20 hex for 48, 64, and 96 character bands, and 0 hex for 128 character bands. A total of 68 compares are attempted for each compare timing sequence.

During the first compare timing sequence no printing is done because the shift register is being loaded with printable data. Compares are printed after the second and before the third character pulse. Printing of compares is always delayed by one character pulse. During the printing sequence another compare timing sequence is taking place so that printing can occur between the next two character pulses.

The HEP STB (Hammer Enable Pulse Strobe) signal is a basic subscan clock signal which is coincident with the Subscan 1 thru Subscan 4 (SS1 thru SS4) pulses. The time between two band character pulses is referred to as a scan time called the HEP STB signal. The HEP STB signal is divided into fourths and generates the SS1 thru SS4 signals, making this a four subscan system. These subscans represent relative time intervals at which hammers can be fired.

This printer uses two horizontal printing positions in standard pitch; a home position of the hammer bar and a shifted position of the hammer bar. In each of these two positions there are hammers positioned at every column. When the hammer bar is in the home position, the odd columns on the forms have hammers and those columns can be printed. When the hammer bar is in the shifted position, the even columns on the forms have hammers and those columns can be printed. However, due to the spacing between characters on the band, only every other hammer (or every fourth column on the forms) will be lined up with a band character during any one subscan. During either horizontal position this printer will print during two (of the four) subscans. Since the hammer and character alignment for both subscans takes place at the same time, the hammers for both subscans are fired at the same time. In the home position, SS1 and SS3 are fired together. In the shifted position, SS2 and SS4 are fired together. In both positions, every hammer is fired for every character compare.

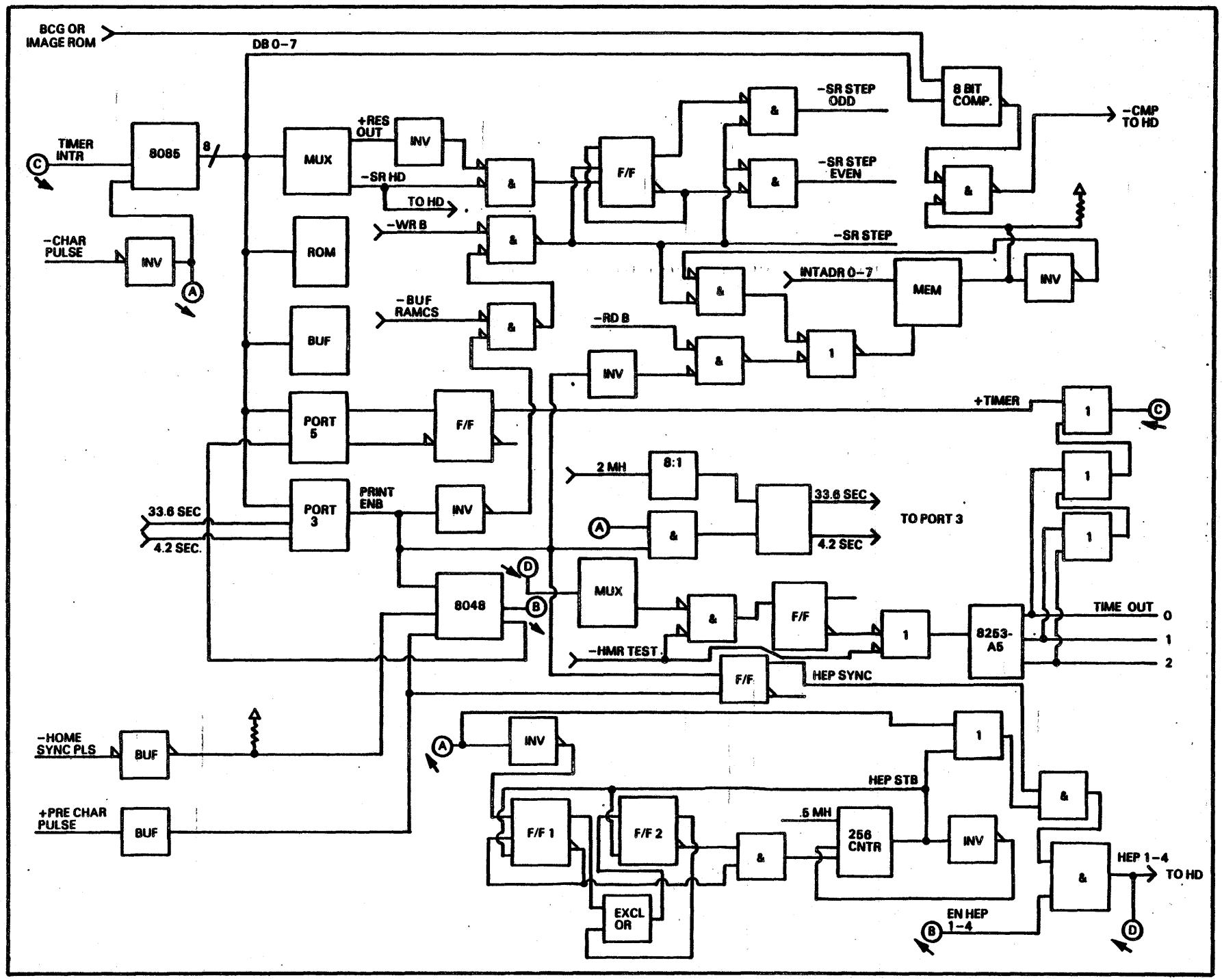

FIGURE 9-7. HEP AND COMPARE BLOCK DIAGRAM

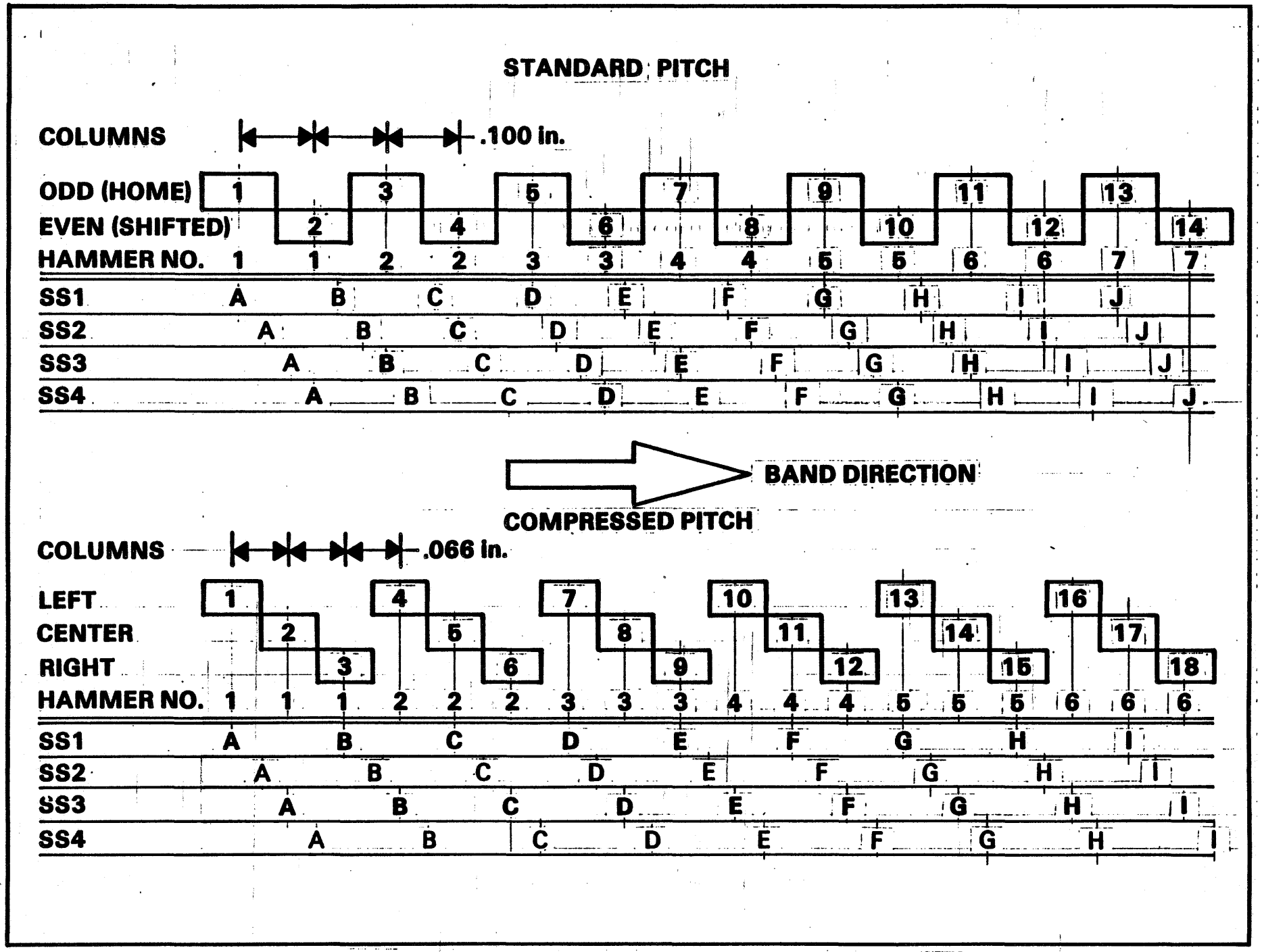

FIGURE 9-8. STANDARD AND COMPRESSED PITCH PRINT CYCLE

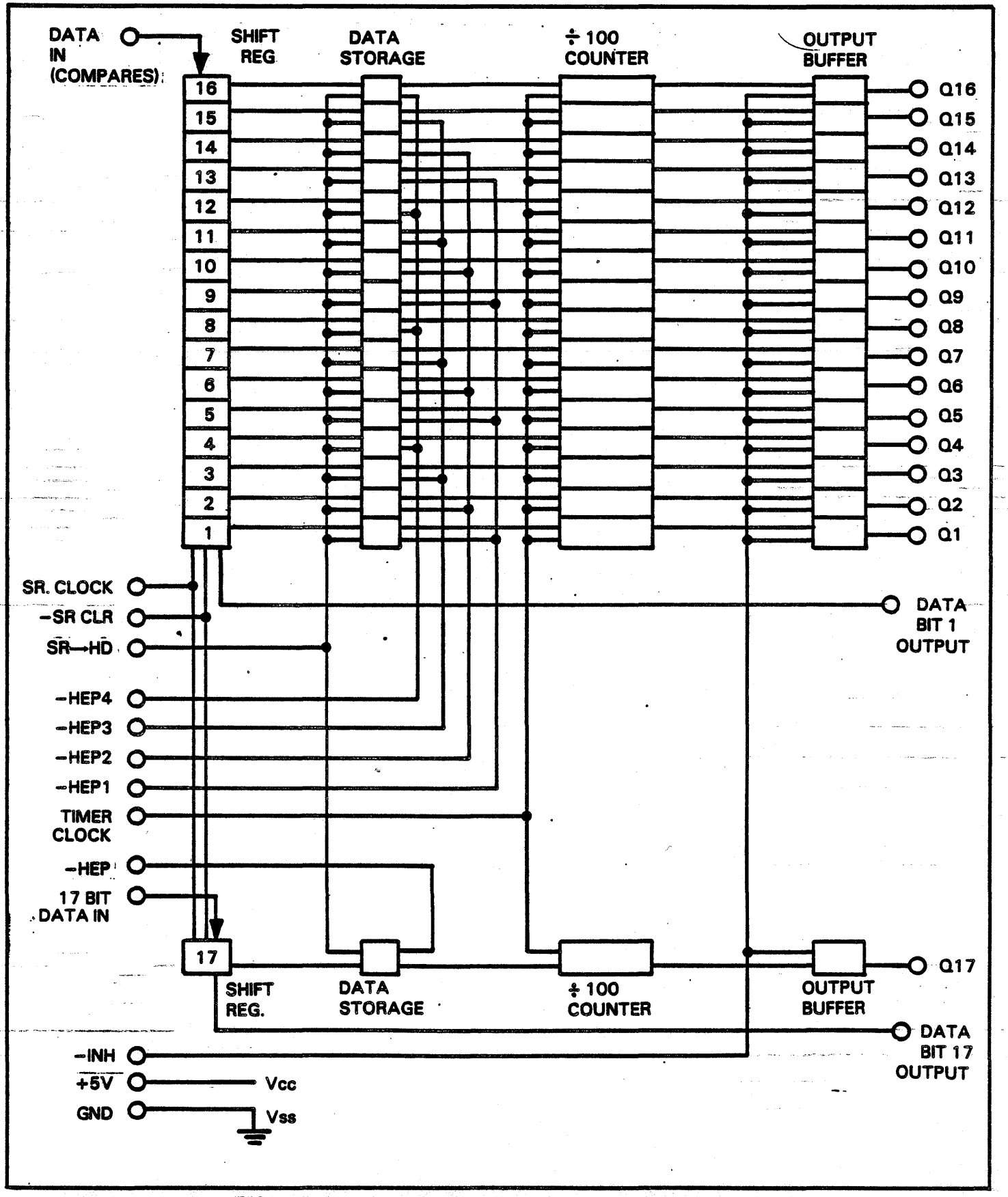

FIGURE 9-9. 17 POSITION HAMMER DRIVER TIMER

Specifications:

a. 0.2 in. spacing between hammers
b. 0.1 in. hammer face
c. Power stroke - .061 in.
d. Free flight - .06 in.
e. Flight time - 1820 usec
f. Hammer settle time - 35 msec max.
g. Hammer bar horizontal shift -
(10 cpi) .100 in., (15 cpi) .066 in.
h. Actuator coil resistance - 8.6 ohms
i. Actuator arm closure time - 1480 usec
j. Actuator spacing - .4 in. (2 rows)
k. Maximum flight time adjustment - .03 in.

SECTION X
FAULT ISOLATION AND SYSTEMS SAFETY

The printer's diagnostic display on the Control Panel will indicate three groups of statuses and/or displays.

a. Normal status of the machine. These statuses are documented in Section 3.
b. Operator Correctable Faults. These faults are documented in the operator cards located in the printer's band cover beneath the bonnet.
c. C.E. Faults. These faults require the removal of protective covers are therefore are not an operator's function. In many cases, the fault can be cleared by simply powering the printer OFF for a few seconds, then back ON. If that fails, read Systems Safety following, then proceed to Fault Isolation.

SYSTEMS SAFETY

Hazardous Voltages and Mechanisms

Maintenance of these printers requires the removal of protective covers provided to protect the customer and field service repairman from hazardous voltages and mechanisms. Maintenance on these printers shall only be performed by trained field service repairman who have been trained to work on these printers with the protective covers removed. Whenever possible during maintenance operations, disconnect the printer power cord from its external power source or switch off the printers main circuit breaker (ON/OFF switch). When power is applied to the printer during maintenance operations, care must be taken to avoid contact with hazardous voltages such as mains circuits and the high voltage section of power supplies.

On low voltage circuits, an additional hazard exists due to the high short circuit current/energy (often hundreds of amps) which can flow into a circuit and cause damage. Great care must be taken to avoid the short circuiting of these circuits by tools or personal metallic adornments such as rings or watchbands.

Handling of MOS Components:

MOS (Metal Oxide Silicon) components are present on the printed circuit boards in your printer. MOS components may be damaged by static electrical charges which are commonly generated by human movement such as walking over carpeted floors or by friction between clothing and chair seats or desk tops. Damage to MOS components may be minimized or eliminated if the following component and board handling precautions are observed.

MOS Component Handling:

1. Before handling MOS components, personnel should ground themselves via earth ground to the printer frame or other earthed metalwork.
2. MOS components should never be removed or installed on boards when printer power is ON.
3. MOS components should be stored in conductive trays (metal or foil lined containers) or have their pins joined by conductive foam.
4. High static materials should be excluded from the working area.

Handling of Printed Circuit Boards With MOS Component Installed:

1. The PCB must always be transported in the container provided.
2. There is no easy way of recognizing a MOS component, so if in doubt, assume that one is fitted to the PCB you are handling.
3. PCB's should never be installed or removed from the printer when the printer is powered ON.

4. When a replacement board is to be installed in a printer, the installer must first touch bare earthed metal frame to discharge any static electric charge he is carrying. Having done so, he should avoid taking any more steps on the floor prior to installing the PCB into the printer. He should then remove the PCB from its container, handling it in a way which avoids any contact with any conducting part of the PCB. He should then remove any protective clip, if fitted to the MOS device and insert the PCB.

5. Prior to removing a PCB, the person removing the PCB must again touch a bare earthed metal frame, avoid taking any further steps on the floor, remove the PCB from the printer, handling it as described above, fit protective clips where appropriate, and place the PCB in the container provided for the purpose.

Reconnecting Ground Straps After Servicing

All covers and major assemblies are grounded to the printer frame (earth ground) with ground straps. These ground straps are used to provide the printer with Electro Static Discharge and Safety Ground. Assure that all ground straps are reconnected to frame ground after servicing.

FAULT ISOLATION

Table 10-1 lists all of the C.E. Faults as they appear on the Control Panel's diagnostic display. Before attempting the replacement of a component or a board, power the printer OFF for a few seconds then power ON. If fault is still present, perform action item number 1 then 2, etc., until the fault is cleared.

TABLE 10-1. BOARD AND COMPONENT SUBSTITUTION GUIDE

CONTROL PANEL DISPLAY																							NO DISPLAY	MOST PROBABLE FIX - POWER OFF FOR 2 SECONDS THEN POWER ON. THEN PROCEED DOWN COLUMN STARTING WITH 1 THEN 2 . ETC. UNTIL PROBLEM IS ISOLATED
8048	8155	8253	BLWR *	FUS2	FUS3 *	HERR	HMR *	FUS4 *	INH	IOER	NHOM	PRT1	PRT2	PRT3	PRT4	PWR *	RAM1	RAM2	STPR *	ROM1	ROM2		
			2	3	2	2			1		2					3			1				REPLACE PRINT HEAD BOARD
2	2	2	5	4	4	3	3	4	3		3	2	2	2	2	5	2	2	2	2	2		REPLACE CPU PCB (1)
							1	2	4							1							REPLACE HAMMER DRIVE PCB
																6							REPLACE POWER TRANSFORMER
																				1			REPLACE IC (B14 ON CPU)
				2																			CHECK CLAMP COIL ASSY AND HARNESS
				1																			REPLACE FUSE 2 ON AC POWER BD
			3																				CHECK/REPLACE BLOWER
					3			3								4						5	REPLACE A.C. POWER BOARD
							2																CHECK/REPLACE HAM ACT COIL ASSY
						4					4												CHECK/REPLACE HORIZ STEPPER
																	1						REPLACE RAM 1 (D-14 ON CPU)
																		1					REPLACE RAM 2 (D-15 ON CPU)
												1											REPLACE PORT 1 (F-8 ON CPU)
													1										REPLACE PORT 2 (F-12 ON CPU)
														1									REPLACE PORT 3 (F-11 ON CPU)
															1								REPLACE PORT 4 (F-3 ON CPU)
	1																						REPLACE PORT 5 (C-7 ON CPU)
1																							REPLACE IC (F-6 ON CPU)
						1					1												CHECK/REPLACE HORIZ RDR
										2													ADAPTER PCB MISSING (1)
									5	1													REPLACE ADAPTER CARD (1)
		1																					REPLACE IC (B-8 ON CPU)
			1																				BLOWER ON, BLOCKED INLET
									2							2							CHK XFMR AND XFMR CAP CONNECTION
																					1		REPLACE IC (B-13 ON CPU)
					1																		REPLACE FUSE 3 ON AC PWR BRD.
								1															REPLACE FUSE 4 ON AC PWR BRD.
																						1	CHECK CONTROL PANEL CABLE CONNECTION
																						2	REPLACE PHE BD. IF LED ON BOARD IS LIT.
																						3	REPLACE CPU BD. IF PWR ON LED IS LIT (CONTROL PNL)
																						4	REPLACE FUSE 1 ON AC POWER BOARD
																						6	REPLACE CONTROL PANEL

* = FLASHING DISPLAY

(1) SWITCHES WILL HAVE TO BE RESET. SEE SECTION 2 OF MAINTENANCE MANUAL

SECTION XI
LOGIC SCHEMATICS

This section contains the logic diagrams for the printer. The logic diagrams are presented in a signal index and modular logic format, which will be introduced and explained in this section.

SIGNAL INDEX AND MODULAR LOGIC INTRODUCTION

The logic for each printed circuit board is shown in a set of schematic diagrams. Each schematic set is called a logic module. In front of each logic module is a list of signals entering and leaving that particular printed circuit board. This list is called the signal index. These 2 elements make up the signal index and modular logic format. Some of the printed circuit boards will have a signal index and logic module. Other circuit boards will have the signal's input and output internal to the module without the signal index listing.

Figures 11-1 and 11-2 show examples of the signal index headings. Figure 11-3 shows the title block of the logic module. The following information will explain these Figures.

Figure 11-1

Ⓐ CROSS REF NO: This number designates which logic module is described by the signal index. The module numbers, locations and names are listed in Table 11-1.

Ⓑ PART NUMBER: This is the 8 digit part number of the signal index.

Ⓒ MODULE LOC: This code identifies the printed circuit board which the signal index is describing.

Ⓓ REV: This letter indicates the current revision level of the signal index.

Ⓔ SCHEMATIC NO: This is the 8 digit drawing number of the schematic diagrams for the logic module being described. It should match the number in block E of Figure 11-3.

Ⓕ MODULE INPUTS: This title indicates the signals listed below it are signals entering the board. Normally they enter on the left side of the schematic diagram.

Ⓖ SOURCE: This column indicates where each signal comes from. Signals coming from components will be shown like this: 1TB3, 3LO1, 4SW2. Signals coming from other boards will be shown like this: 0100-1BP1, 0200-1PC2, 0300-1PC3.

Ⓗ SIGNAL NAME: Self explanatory.

Ⓘ MODULE CROSS REF NO: This column indicates where the signal is found in the logic module. It will appear in this form: 0801-P1-44. 0801 is the number that will match block G of Figure 11-3. P1 is the connector on the printed circuit board, and 44 is the pin number of that connector.

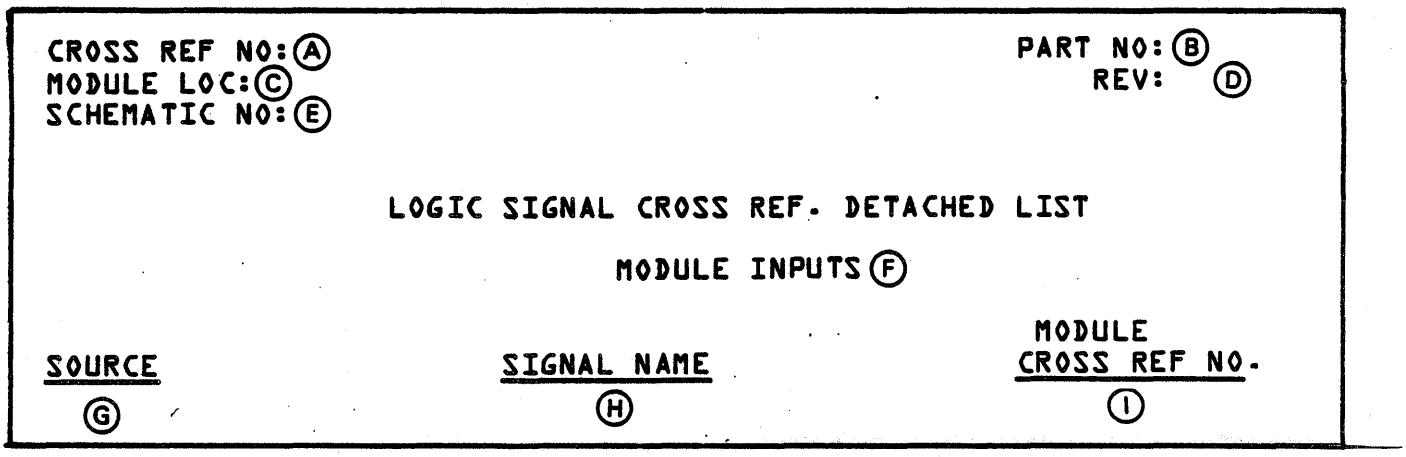

FIGURE 11-1. SIGNAL INDEX HEADING – INPUT

Figure 11-2

Ⓐ CROSS REF NO: This number designates which logic module is described by the signal index. The module numbers, locations and names are listed in Table 11-1.

Ⓑ PART NUMBER: This is the 8 digit part number of the signal index.

Ⓒ MODULE LOC: This code identifies the printed circuit board which the signal index is describing.

Ⓓ REV: This letter indicates the current revision level of the signal index.

Ⓔ SCHEMATIC NO: This is the 8 digit drawing number of the schematic diagrams for the logic module being described. It should match the number in block E of Figure 11-3.

Ⓕ MODULE OUTPUTS: This title indicates the signals listed below it are signals leaving the board. Normally they leave on the right side of the schematic diagram.

Ⓖ MODULE CROSS REF NO: This column indicates where the signal is found in the logic module. It will appear in this form: 0801-P1-44. 0801 is the number that will match block G of Figure 11-3. P1 is the connector on the printed circuit board, and 44 is the pin number of that connector.

Ⓗ SIGNAL NAME: Self explanatory.

Ⓘ DESTINATION: This column indicates where the signals are going. Signals going to components will be shown like this: 1TB3, 3LO1, 4SW2. Signals going to other boards will be shown like this: 0100-1BP1, 0200-1PC2, 0300-1PC3.

CROSS REF NO: Ⓐ
MODULE LOC: Ⓒ
SCHEMATIC NO: Ⓔ

PART NO: Ⓑ
REV: Ⓓ

LOGIC SIGNAL CROSS REF. DETACHED LIST

MODULE OUTPUTS Ⓕ

MODULE CROSS REF NO. Ⓖ	SIGNAL NAME Ⓗ	DESTINATION Ⓘ

FIGURE 11-2. SIGNAL INDEX HEADING – OUTPUT

Figure 11-3

Ⓐ This is the title block of the schematic sheet and normally describes what is in the drawing.

Ⓑ This code identification block is for use by the manufacturing facility only.

Ⓒ This block indicates the size of the original drawing.

Ⓓ Some drawings show this 8 digit part number for the printed circuit board WITHOUT COMPONENTS.

NOTE

DO NOT USE THIS NUMBER TO ORDER A REPLACEMENT FUNCTIONAL BOARD. REFER TO THE PARTS MANUAL FOR THE COMPLETED BOARD ASSEMBLY PART NUMBER.

Ⓔ This is the 8 digit part number assigned to the drawing set. See note above.

Ⓕ This block indicates the current revision level of the drawing.

Ⓖ This block is the reference find number for signals designated by I of Figure 11-1 and G of Figure 11-2.

Ⓗ This block indicates the individual sheets' numbered location within the complete set.

Ⓘ This block shows the module location. It should match C of Figures 11-1 and 11-2.

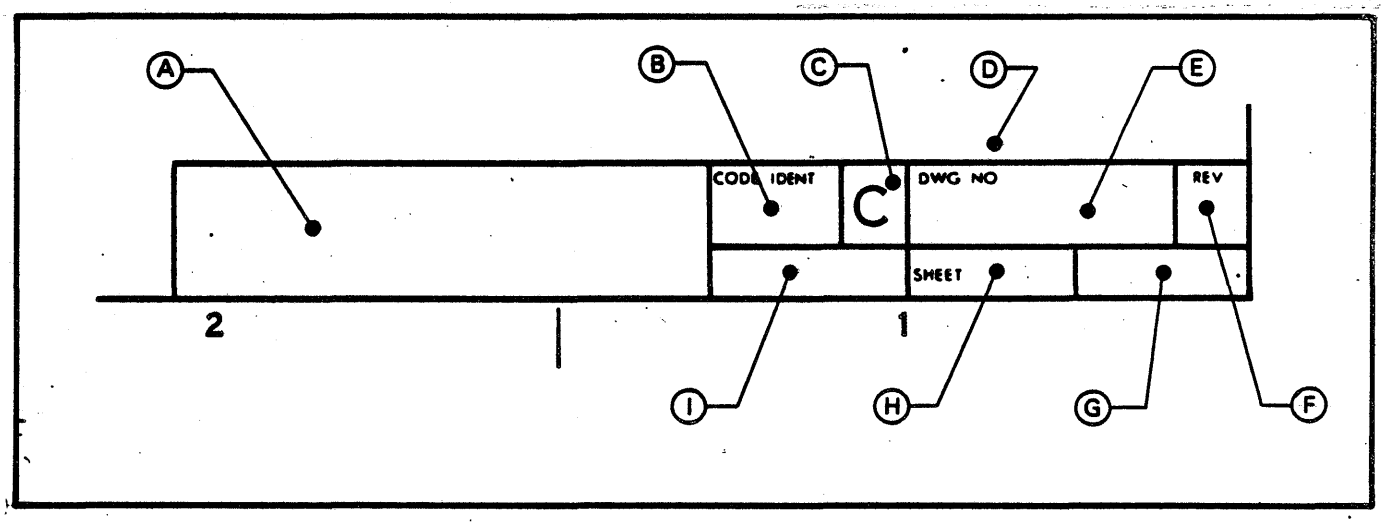

FIGURE 11-3. LOGIC MODULE TITLE BLOCK

TABLE 11-1. CROSS REF. NO. CODES

CROSS REF. NO.	MODULE LOC.	NAME
0100	1BP1	Backplane
0200	1PC2	CPU
0300	1PC3	Print Head Electronics
0400	1PC4	Hammer Driver
0500	5PC1	Control Panel
0600	1PC6	Input Power
0700	6PC1	Interface Adapter
0800	1PC1	Personality Module
0900	4PC1	AC Program
3100	7PC1	EVFU

GENERAL NOTES

1. Each logic symbol in the schematic diagram reflects the function being performed,(A) component type,(B) and board location of the device (C). See Figure 11-4.

2. Information of device operation is available in the key to logic symbols, manual number 95390100.

3. All standard devices have the following DC power connections which are not shown as part of the logic symbols:

14 PIN DEVICE	FUNCTION	16 PIN DEVICE
Pin 7	Logic Ground	Pin 8
Pin 14	+5VDC	Pin 16

4. Digital Logic Levels:

Input
HI = greater than 2.0 VDC
LO = less than 0.8 VDC

Output
HI = greater than 2.4 VDC
LO = less than 0.4 VDC

5. DC Filtering:

   a. Filter capacitors are generally located near the input power connections.
   b. High frequency decoupling capacitors are located between devices, approximately 1 capacitor for every 3 devices.

6. Square pads on the printed circuit board indicate:

   a. Pin 1 of an IC device.
   b. Pin 1 of connectors.
   c. Cathode of a diode.
   d. Positive terminal of electrolytic capacitors.

7. Signals are connected by way of the backplane, or interconnections described in the wiring diagrams.

8. Signals shown in the timing diagrams have been simplified for illustration and are not true images of the actual signals they represent.

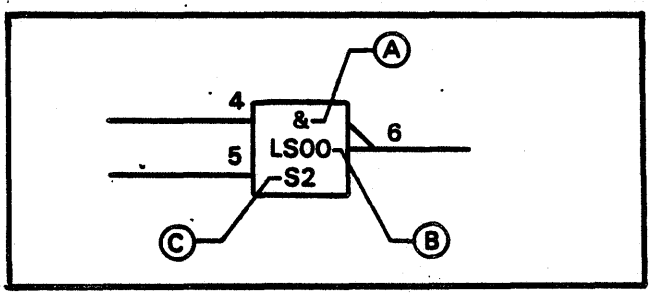

Figure 11-4. LOGIC SYMBOL

PRINTER SCHEMATICS

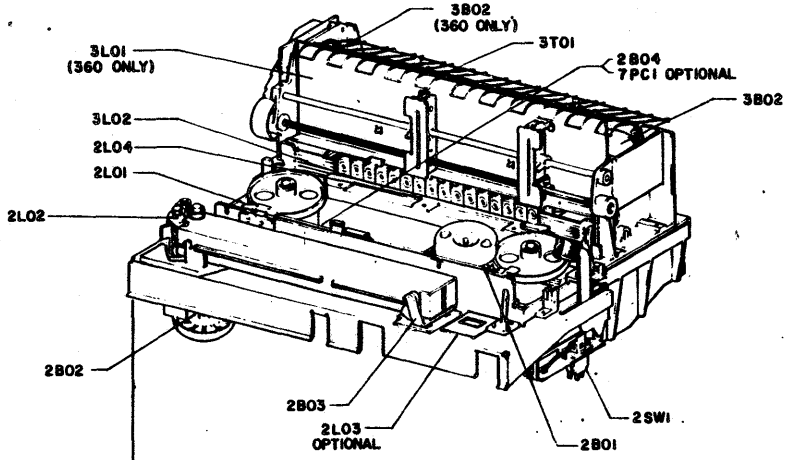

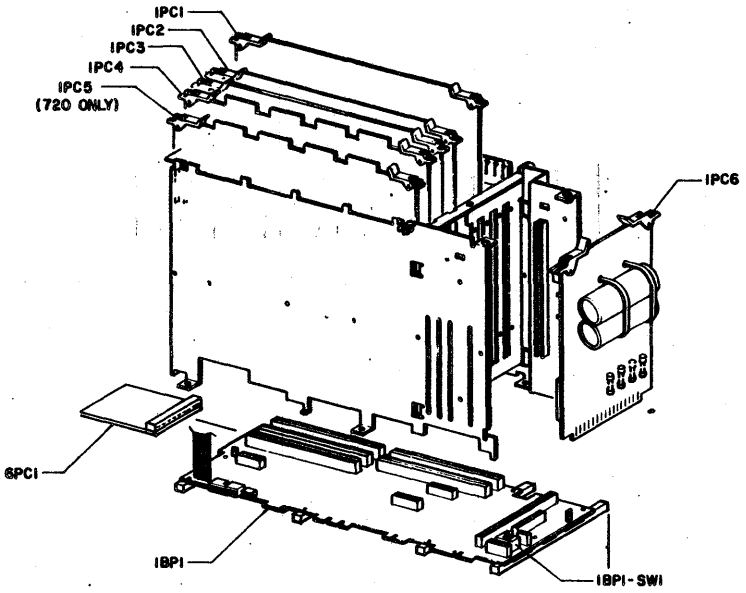

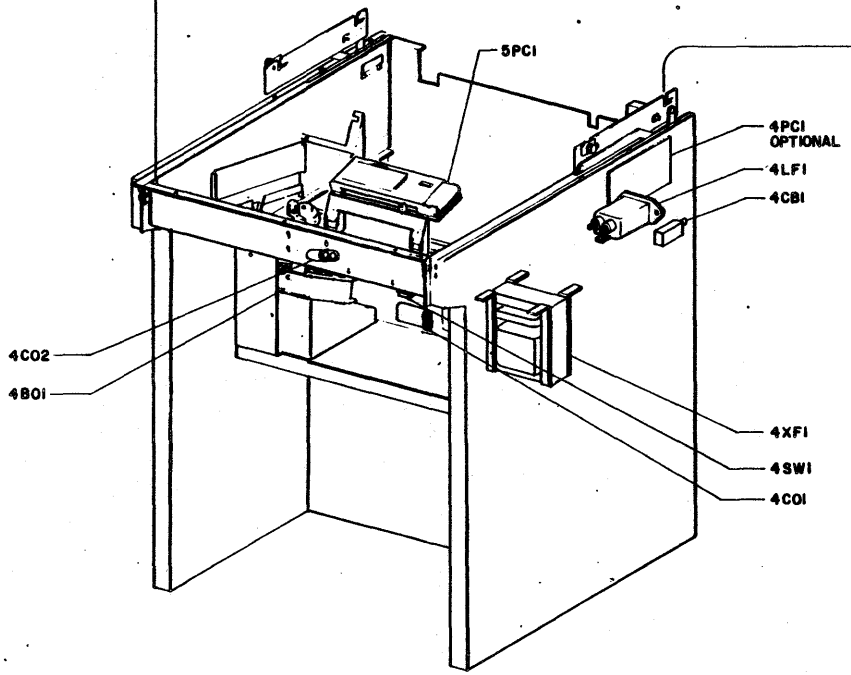

AREA	MACHINE LOCATION
1	CARD RACK
2	GATE
3	HAMMER BANK
4	BASE
5	CONTROL PANEL
6	INPUT / OUTPUT

PARTS ABBREVIATION CODE	
BO	MOTOR
CB	CIRCUIT BREAKER
CO	CAPACITOR
LF	LINE FILTER
LO	COIL / HALL EFFECT
PC	PRINTED CIRCUIT BOARD
SW	SWITCH
TO	THERMISTOR
XF	TRANSFORMER

MACHINE AREA DESIGNATOR AND PARTS LOCATOR

CODE IDENT	DWG NO	REV
C	44682272	A

SHEET 2

44682272

SPECIAL NOMENCLATURE

ABBREVIATION	DEFINITION	CROSS REF NUMBER
ALE 0	ADDRESS LATCH ENABLE BUFFERED	0201
ALE (8085)	ADDRESS LATCH ENABLE	0201
AD0-7	ADDRESS/DATA 0-7	0201
APS SEL	AUTO LINE FEAT SKIP SELECT	0502
AUTO LF	AUTO LINE FEED	0208
B DD-7	BUFFERED ADDRESS/DATA 0-7	0201
BAND MTR	BAND MOTOR	0305
BLWR FLT	BLOWER FAULT	0304
BMC	BAND MOTOR CONTROL	0208
BMSE	BAND MOTOR SPEED ERROR	0206
BOF	BOTTOM OF FORMS	0204
BSF SEL	BUSS AVAILABLE	0212
BSAVL	BAND SYNC ERROR	0211
BSE	BAND MOTOR	0206
BUF RAM CS	BUFFER RAM CHIP SELECT	0213
CFDAT	CONFIGURATION DATA	0204
CFPLS	CONFIGURATION PULSE	0204
CHAN 1	CHANNEL 1	0204
CHAN ( )	CHANNEL	0212
CHAR PLS	CHARACTER PULSE	0301
CLAMP FLT	CLAMP FAULT	0301
CLK Ø	CLOCK Ø	0201
CMP	COMPARE	0213
COMP PITCH	COMPRESSED PITCH	0208
CONFIG TEST SEL	CONFIGURATION TEST SELECT	0502
DB 0-7	DATA BUSS 0-7	0203
DISP LATH CS	DISPLAY LATCH CHIP SELECT	0213
DISPLAY WR	DISPLAY WRITE	0201
DISP WR CS	DISPLAY WRITE CHIP SELECT	0215
ELPLS	EVFU LOADED PULSE	0211
EN HEP	ENABLE HEP	0206
ENRDY	ENABLE READY	0211
EXADV	EXTERNAL ADVANCE	0211
FORM CONT SEL	FORM CONTROL SELECT	0210
FRACTION SEL 2	FRACTION SELECT 2	0502
FUSE FLT	FUSE FAULT	0402
H MTR Ø ( )	HORIZONTAL MOTOR PHASE ( )	0306
HD 720LPM	HAMMER DRIVER 720 LPM	0214
H HOLD	HORIZONTAL HOLD	0210
HD CLK	HAMMER DRIVER CLOCK	0207
HD CLK STD	HAMMER DRIVER CLOCK STANDARD	0207
HEP ( )	HAMMER ENABLE PULSE	0208
HEP SYNC	HAMMER ENABLE PULSE SYNC	0208
HAR BANK THERM	HAMMER BANK THERMISTOR	0301
HAR FLT	HAMMER FAULT	0401
HAR IMPACT	HAMMER IMPACT	0214
HAR TEST	HAMMER TEST	0210
(HAR TEST * T02)	HAMMER TEST AND TIME OUT 2	0214
HAR TST	HAMMER TEST	0210
HORZ 2Ø	HORIZONTAL 2 PHASE	0210
HORZ PHASE ( )	HORIZONTAL PHASE	0210
HORZ RDR	HORIZONTAL READER	0204
INIT CMPL	INITIALIZATION COMPLETE	0211
INTADR	INTERNAL ADDRESS	0301
INTLK	INTERLOCK (NOT USED)	0210
I/O FAULT	INPUT/OUTPUT FAULT	0210
IO/M (8085)	INPUT OUTPUT/MEMORY (8085)	0201
I/O PORT ( ) CS	INPUT OUTPUT PORT ( ) CHIP SELECT	0213

ABBREVIATION	DEFINATION	CROSS REF. NUMBER
LD CPL	LOAD COMPLETE	0211
LDEVFU	LOAD ELECTRONIC VERTICAL FORMAT UNIT	0211
LDVFU	LOAD VERTICAL FORMAT UNIT	0209
LINE CTR	LINE COUNTER	0305
LIP	LOAD IN PROCESS	0211
MC	MASTER CLEAR	0201
MEMCS	MEMORY CHIP SELECT	0205
OOP ROR	OUT OF PAPER READER	0210
OPT RAM CS	OPTIONAL RAM CHIP SELECT	0213
PERF SEL	PERFORATION SELECT	0210
PIP Ø	PRINT IN PROGRESS	0210
PMI X	PAPER MOTION INDEX	0204
PMV CLR	PAPER MOTION VERIFICATION CLEAR	0402
PMV CLR FF	PAPER MOTION VERIFICATION FLIP FLOP	0207
POS Ø	POSITION Ø	0209
PRE CHAR PLS	PRE-CHARACTER PULSE	0301
PRINT INH	PRINT INHIBIT	0307
PRT EN	PRINT ENABLE	0211
PWR INH	POWER INHIBIT	0213
RD Ø	READ BUFFERED	0201
RD I/O	READ INPUT/OUTPUT	0205
RIB ADV	RIBBON ADVANCE	0209
RIB FLT	RIBBON FAULT	0307
RIB MTR	RIBBON MOTOR	0307
ROM ( ) CS	READ ONLY MEMORY CHIP SELECT	0213
SEAM S.W. GND	SEAM SWITCH GROUND	0307
SR HD	SHIFT REGISTER HAMMER DRIVER	0201
SR STEP ( )	SHIFT REGISTER STEP	0214
SSPLS	START STOP PULSE	0215
STAT BAND	STATISTICAL BAND	0208
STAT SEQ	STATISTICAL SEQUENCE	0208
STLMP	START LAMP	0215
ST LMP	START LAMP	0502
STPR ENB	STEPPER ENABLE	0304
STPR FLT	STEPPER FAULT	0304
STREQ	STATUS REQUEST	0211
TEST PRINT PAT SEC	TEST PRINT PATTERN SELECT	0204
TIMER INTERRUPT	TIMER INTERRUPT	0214
TP SEC ( )	TEST PRINT SELECT	0212
TST PRT LAMP	TEST PRINT LAMP	0211
V2 Ø	VERTICAL TWO PHASE	0210
V2 HOLD	VERTICAL HOLD	0210
-V MTR Ø ( )	-VERTICAL MOTOR PHASE ( )	0305
VERT PHASE ( )	VERTICAL PHASE ( )	0210
VFU MTR	VERTICAL FORMAT UNIT MOTOR	0212
VFU STRB	VERTICAL FORMAT UNIT STROBE	0210
WR	WRITE	0202
WR B	WRITE BUFFERED	0201
8040 CS	8040 CHIP SELECT	0213
8253-5 CS	8253-5 CHIP SELECT	0213
8155-2 CS	8155-2 CHIP SELECT	0215
8/8 SEL	8/8 LINE SELECT	0502
8 LPI LAMP	8 LINE PER INCH LAMP	0204
360) 720 HAM VOLT FLT	720 HAMMER VOLTAGE FAULT	0402
720 LPM	720 LINES PER MINUTE	0214
38V REG INH	38 VOLT REGULATOR INHIBIT	0302

LOC. CROSS REF NO.

SPECIAL NOMENCLATURE	CODE IDENT 91017	C	DWG NO 44682272	REV A
			SHEET 4	CROSS REF NO

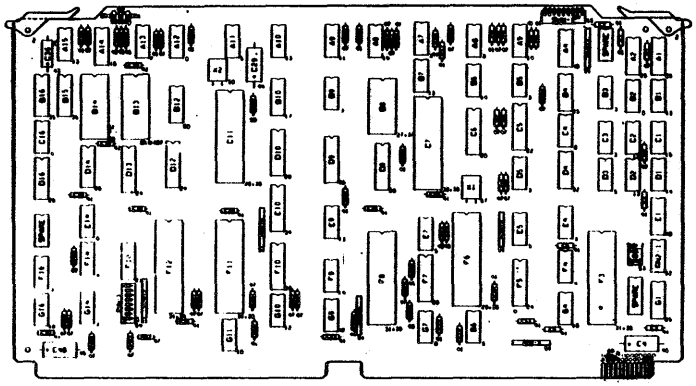

CPU - IPC2

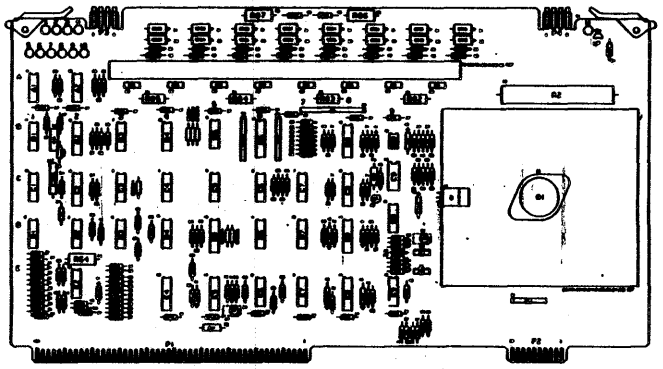

PHE - IPC3

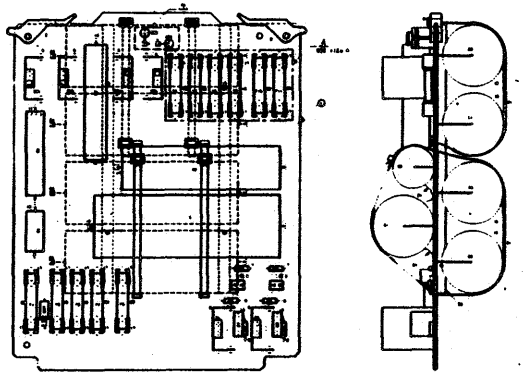

INPUT POWER - IPC6

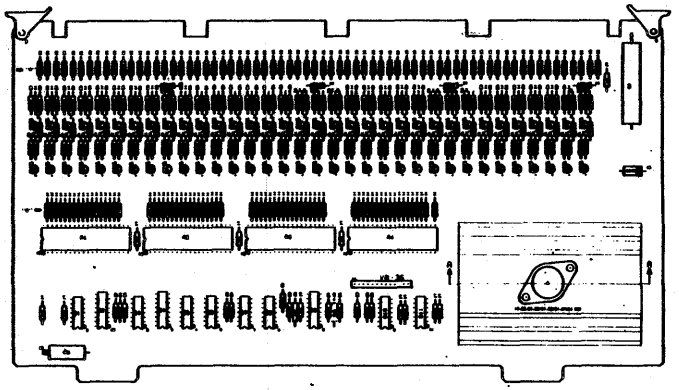

HAMMER DRIVER - IPC4 / IPC5

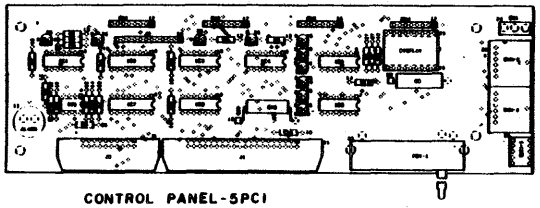

CONTROL PANEL - 5PC1

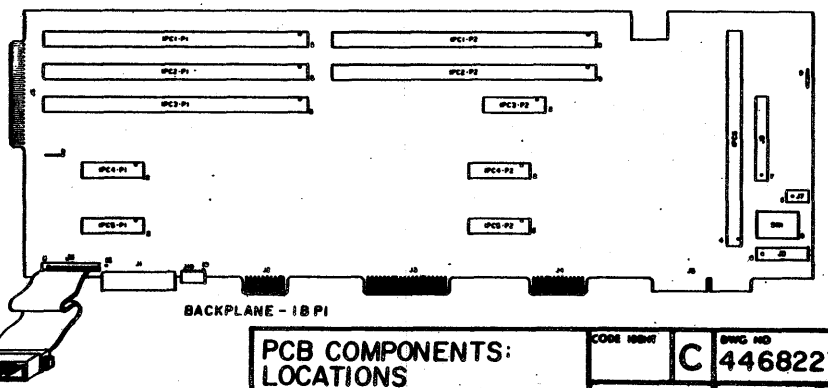

BACKPLANE - 18 PI

PCB COMPONENTS: LOCATIONS	CODE IDENT	C	DWG NO 44682272 REV A
			SHEET 8

11-8

44682272

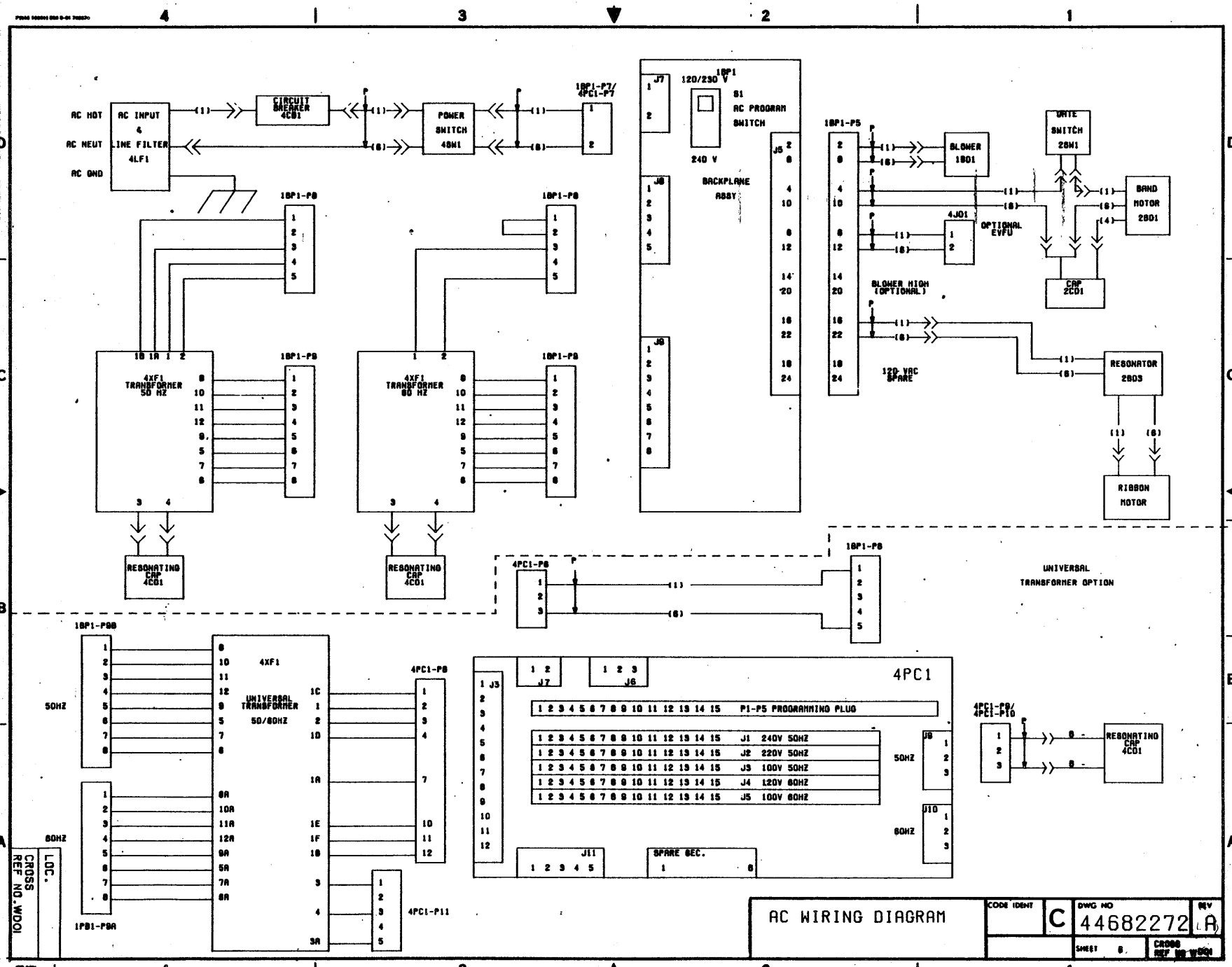
AC HOT
AC NEUT
AC GND
AC INPUT & LINE FILTER 4LF1
CIRCUIT BREAKER 4CB1
POWER SWITCH 4SW1
1BP1-P7/ 4PC1-P7
1BP1
120/230 V
S1
AC PROGRAM SWITCH
240 V
BACKPLANE ASSY
J7
J8
J9
J5
1BP1-P5
BLOWER 1BD1
UNIT SWITCH 2SW1
BAND MOTOR 2BD1
4JD1
OPTIONAL EVFU
CAP 2CD1
BLOWER HIGH (OPTIONAL)
120 VAC SPARE
RESONATOR 2BD3
RIBBON MOTOR
1BP1-P8
4XF1 TRANSFORMER 50 HZ
4XF1 TRANSFORMER 60 HZ
RESONATING CAP 4CD1
4PC1-P8
UNIVERSAL TRANSFORMER OPTION
1BP1-P9B
4XF1
UNIVERSAL TRANSFORMER 50/60HZ
50HZ
60HZ
1PB1-P9A
4PC1-P8
4PC1-P11
4PC1
P1-P5 PROGRAMMING PLUG
J1 240V 50HZ
J2 220V 50HZ
J3 100V 50HZ
J4 120V 60HZ
J5 100V 60HZ
J11
SPARE SEC.
4PC1-P9/ 4PC1-P10
RESONATING CAP 4CD1
CROSS REF NO.WDOI
LOC.
AC WIRING DIAGRAM
CODE IDENT
C
DWG NO
44682272
REV
A
SHEET 8

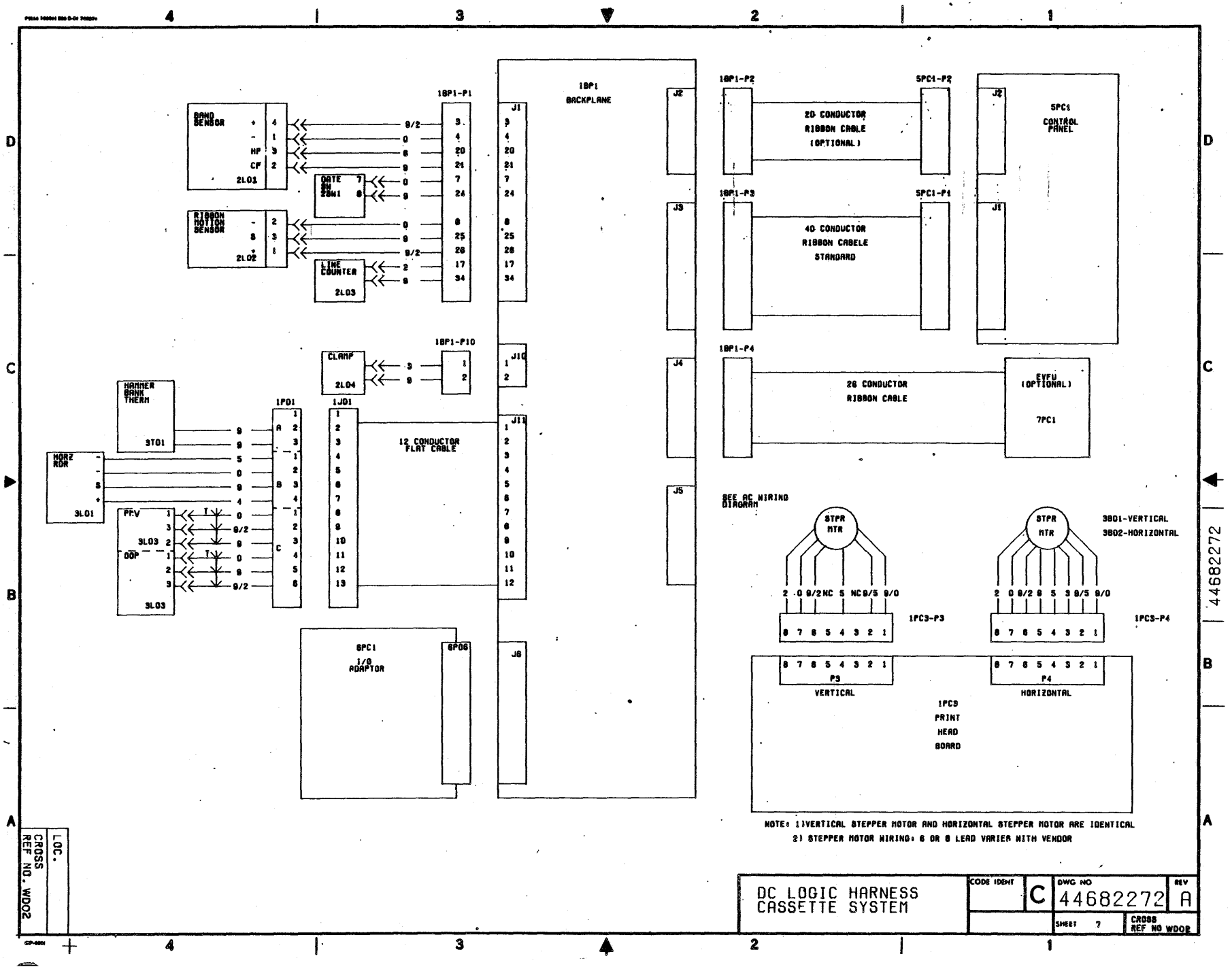

11-10

44682272

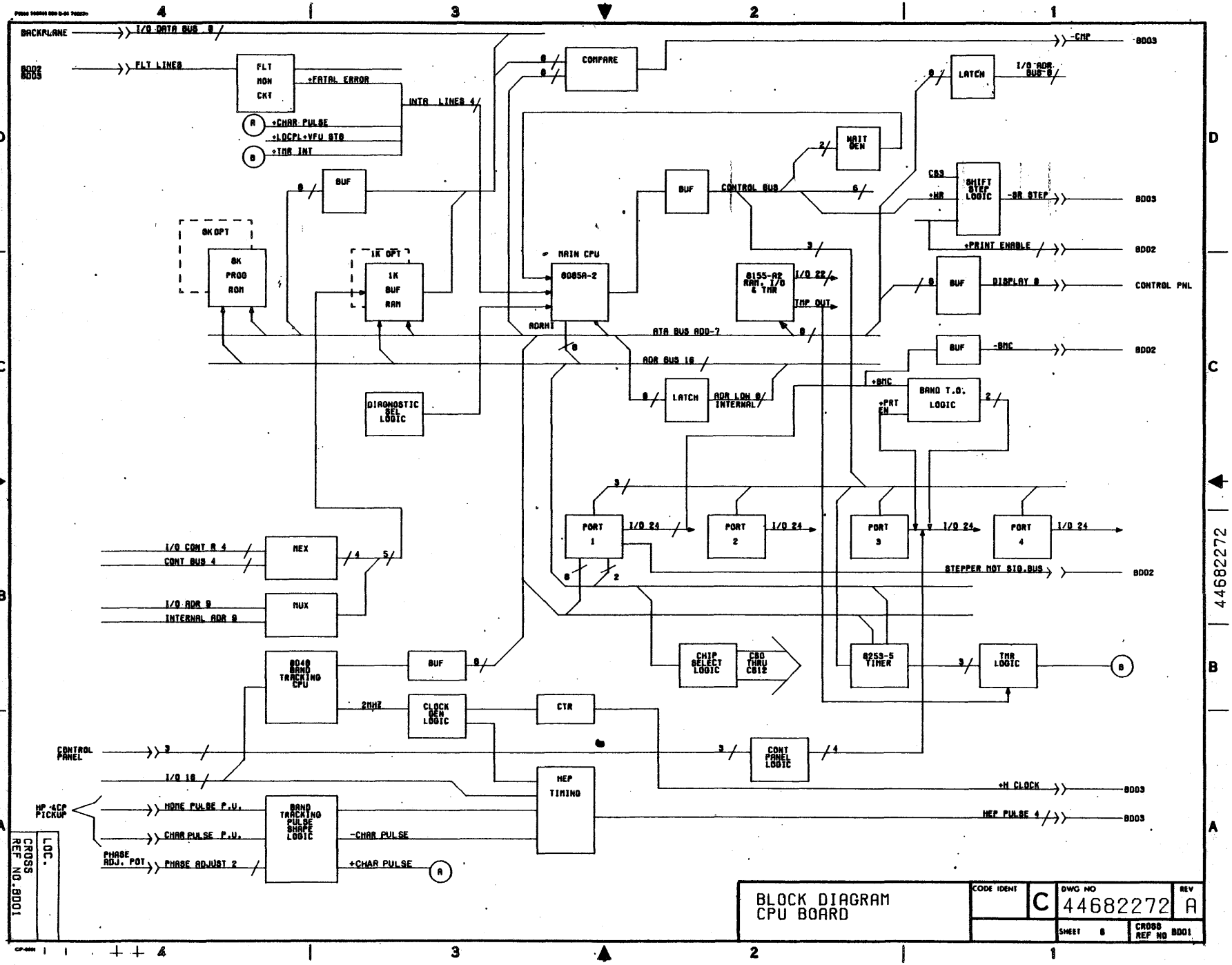
BACKPLANE
I/O DATA BUS 8
BD02
BD05
FLT LINES
FLT MON CKT
+FATAL ERROR
INTR LINES 4
+CHAR PULSE
+LOCPL+VFU STB
+TMR INT
COMPARE
-CMP
BD03
LATCH
I/O ADR BUS 8
WAIT GEN
BUF
CONTROL BUS
CS3
+MR
SHIFT STEP LOGIC
-SR STEP
+PRINT ENABLE
BD02
8K OPT
8K PROG ROM
1K OPT
1K BUF RAM
MAIN CPU
8085A-2
8155-8P RAM, I/O & TMR
I/O 22
TMR OUT
DISPLAY 8
CONTROL PNL
ADRHI
DATA BUS ADD-7
ADR BUS 16
-BMC
+BMC
+PRT EN
BAND T.O. LOGIC
DIAGNOSTIC SEL LOGIC
ADR LOW 8/ INTERNAL
PORT 1
PORT 2
PORT 3
PORT 4
I/O 24
STEPPER MOT STD.BUS
I/O CONT A 4
CONT BUS 4
MUX
I/O ADR 8
INTERNAL ADR 8
8048 BAND TRACKING CPU
CHIP SELECT LOGIC
CS0 THRU CS12
8253-5 TIMER
TMR LOGIC
CLOCK GEN LOGIC
2MHZ
CTR
CONTROL PANEL
I/O 16
CONT PANEL LOGIC
HEP TIMING
+H CLOCK
HEP PULSE 4
HP 4CP PICKUP
NOMI PULSE P.U.
CHAR PULSE P.U.
PHASE ADJ. POT
PHASE ADJUST 2
BAND TRACKING PULSE SHAPE LOGIC
-CHAR PULSE
+CHAR PULSE
CROSS REF NO.BD01
LOC.
BLOCK DIAGRAM
CPU BOARD
CODE IDENT
C
DWG NO
44682272
REV
A
SHEET 8
CROSS REF NO BD01

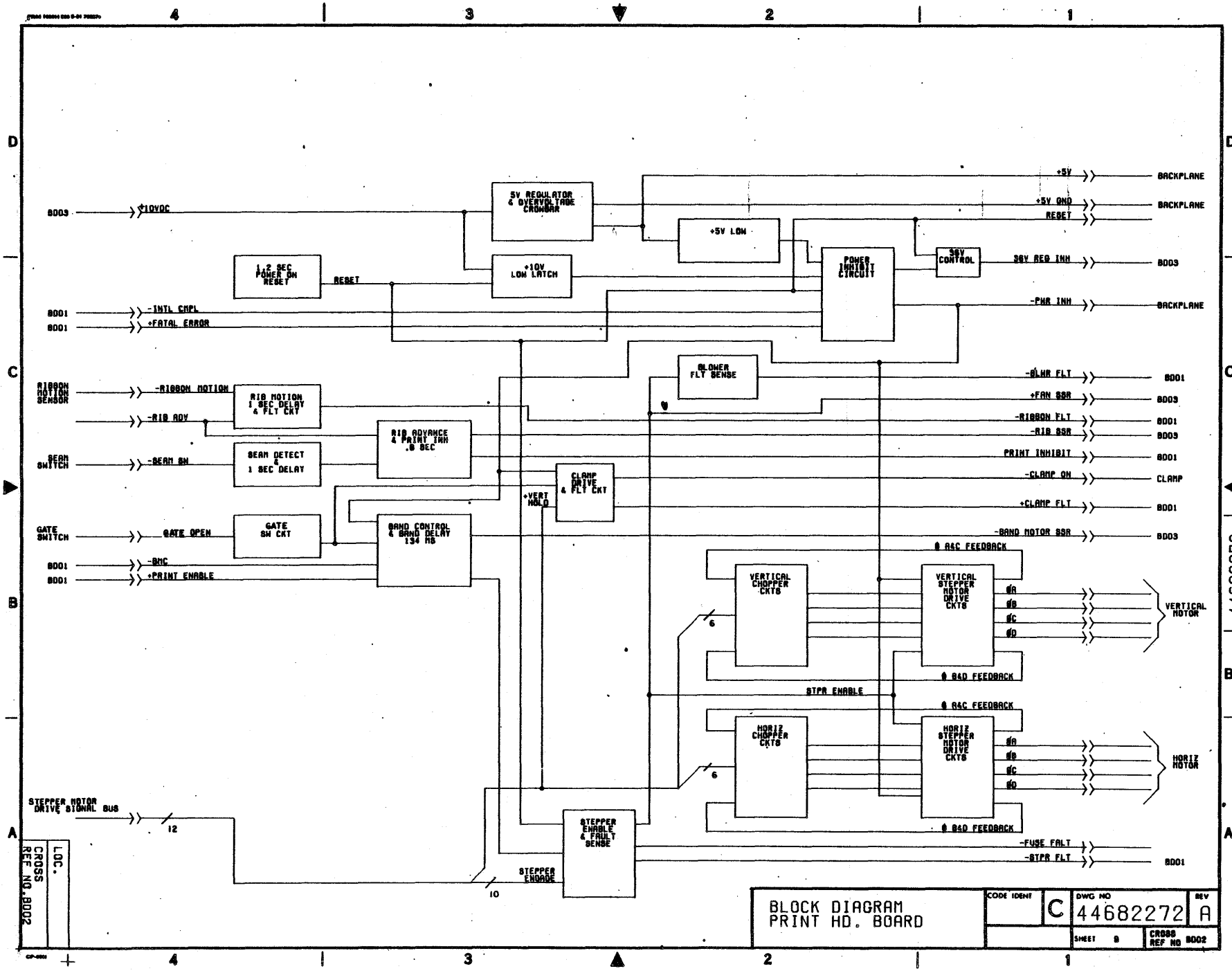
BD03
+10VDC
5V REGULATOR & OVERVOLTAGE CROWBAR
+5V LOW
+5V
+5V GND
RESET
BACKPLANE
BACKPLANE
1.2 SEC POWER ON RESET
RESET
+10V LOW LATCH
POWER INHIBIT CIRCUIT
36V CONTROL
36V REQ INH
BD03
BD01
-INTL CMPL
BD01
+FATAL ERROR
-PWR INH
BACKPLANE
BLOWER FLT SENSE
-BLWR FLT
BD01
+FAN SSR
BD03
RIBBON MOTION SENSOR
-RIBBON MOTION
-RIB ADV
RIB MOTION 1 SEC DELAY & FLT CKT
-RIBBON FLT
BD01
-RIB SSR
BD09
RIB ADVANCE & PRINT INH .8 SEC
BEAM SWITCH
-BEAM BK
BEAM DETECT & 1 SEC DELAY
PRINT INHIBIT
BD01
-CLAMP ON
CLAMP
CLAMP DRIVE & FLT CKT
+VERT HOLD
+CLAMP FLT
BD01
GATE SWITCH
GATE OPEN
GATE SW CKT
BAND CONTROL & BAND DELAY 134 MS
-BAND MOTOR SSR
BD03
BD01
-BMC
BD01
+PRINT ENABLE
Ø A&C FEEDBACK
VERTICAL CHOPPER CKTS
VERTICAL STEPPER MOTOR DRIVE CKTS
ØA
ØB
ØC
ØD
VERTICAL MOTOR
6
Ø B&D FEEDBACK
STPR ENABLE
Ø A&C FEEDBACK
HORIZ CHOPPER CKTS
HORIZ STEPPER MOTOR DRIVE CKTS
ØA
ØB
ØC
ØD
HORIZ MOTOR
6
Ø B&D FEEDBACK
STEPPER MOTOR DRIVE SIGNAL BUS
12
STEPPER ENABLE & FAULT SENSE
-FUSE FALT
-STPR FLT
BD01
STEPPER ENABLE
10
CROSS REF NO. BD02
LOC.
BLOCK DIAGRAM
PRINT HD. BOARD
CODE IDENT
C
DWG NO
44682272
REV
A
SHEET 8
CROSS REF NO BD02

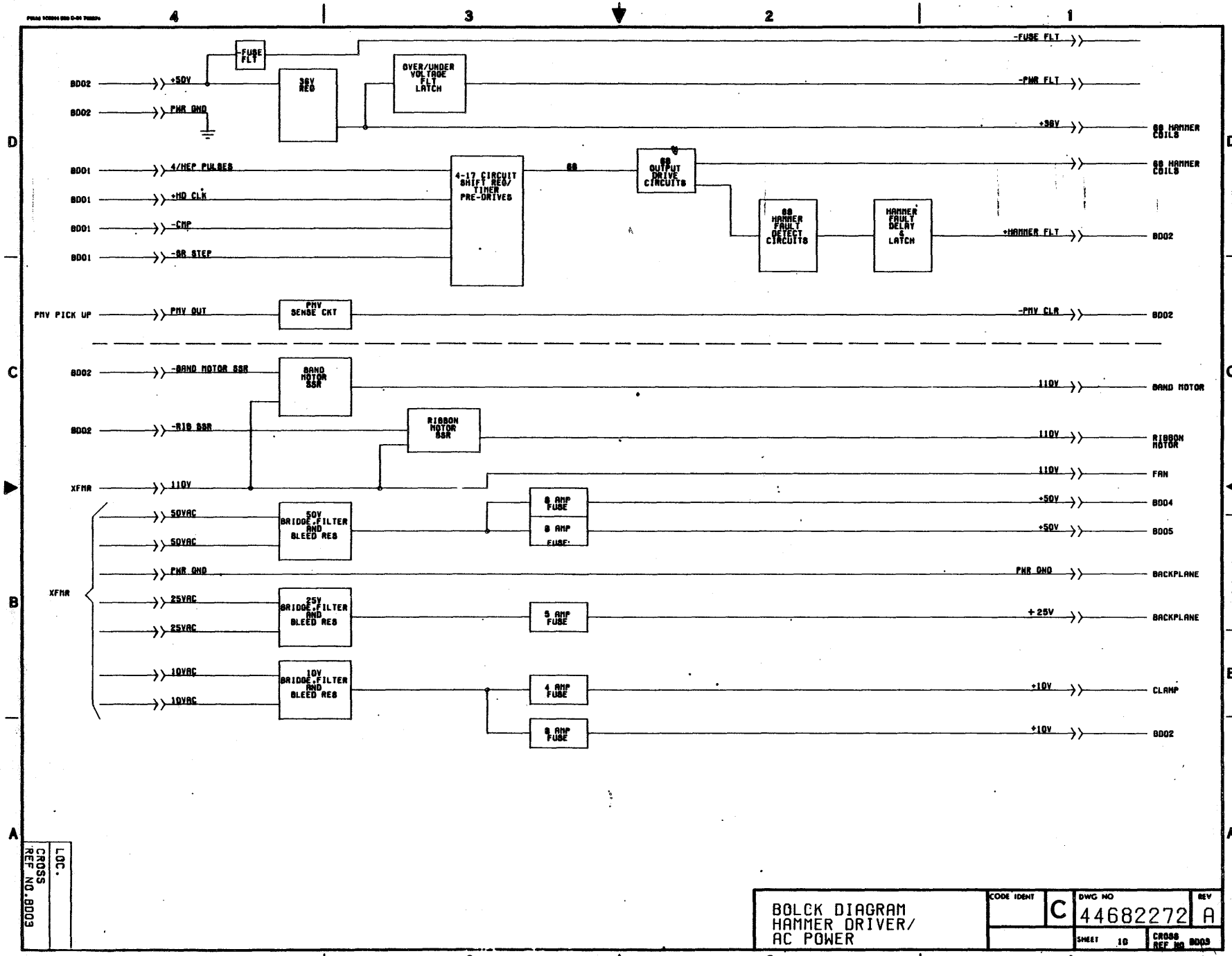

BD02
+50V
PWR GND
-FUSE FLT
36V REG
OVER/UNDER VOLTAGE FLT LATCH
-FUSE FLT
-PWR FLT
+36V
68 HAMMER COILS
BD01
4/HEP PULSES
+HD CLK
-CMP
-SR STEP
4-17 CIRCUIT SHIFT REG/ TIMER PRE-DRIVES
68
68 OUTPUT DRIVE CIRCUITS
68 HAMMER FAULT DETECT CIRCUITS
HAMMER FAULT DELAY & LATCH
+HAMMER FLT
PMV PICK UP
PMV OUT
PMV SENSE CKT
-PMV CLR
-BAND MOTOR SSR
BAND MOTOR SSR
110V
BAND MOTOR
-RIB SSR
RIBBON MOTOR SSR
RIBBON MOTOR
XFMR
FAN
50VAC
50V BRIDGE,FILTER AND BLEED RES
8 AMP FUSE
+50V
BD04
BD05
PWR GND
BACKPLANE
25VAC
25V BRIDGE,FILTER AND BLEED RES
5 AMP FUSE
+25V
10VAC
10V BRIDGE,FILTER AND BLEED RES
4 AMP FUSE
+10V
CLAMP
LOC.
CROSS REF NO.BD03
BOLCK DIAGRAM HAMMER DRIVER/ AC POWER
CODE IDENT
C
DWG NO 44682272
REV A
SHEET 10
CROSS REF NO BD03

44682272

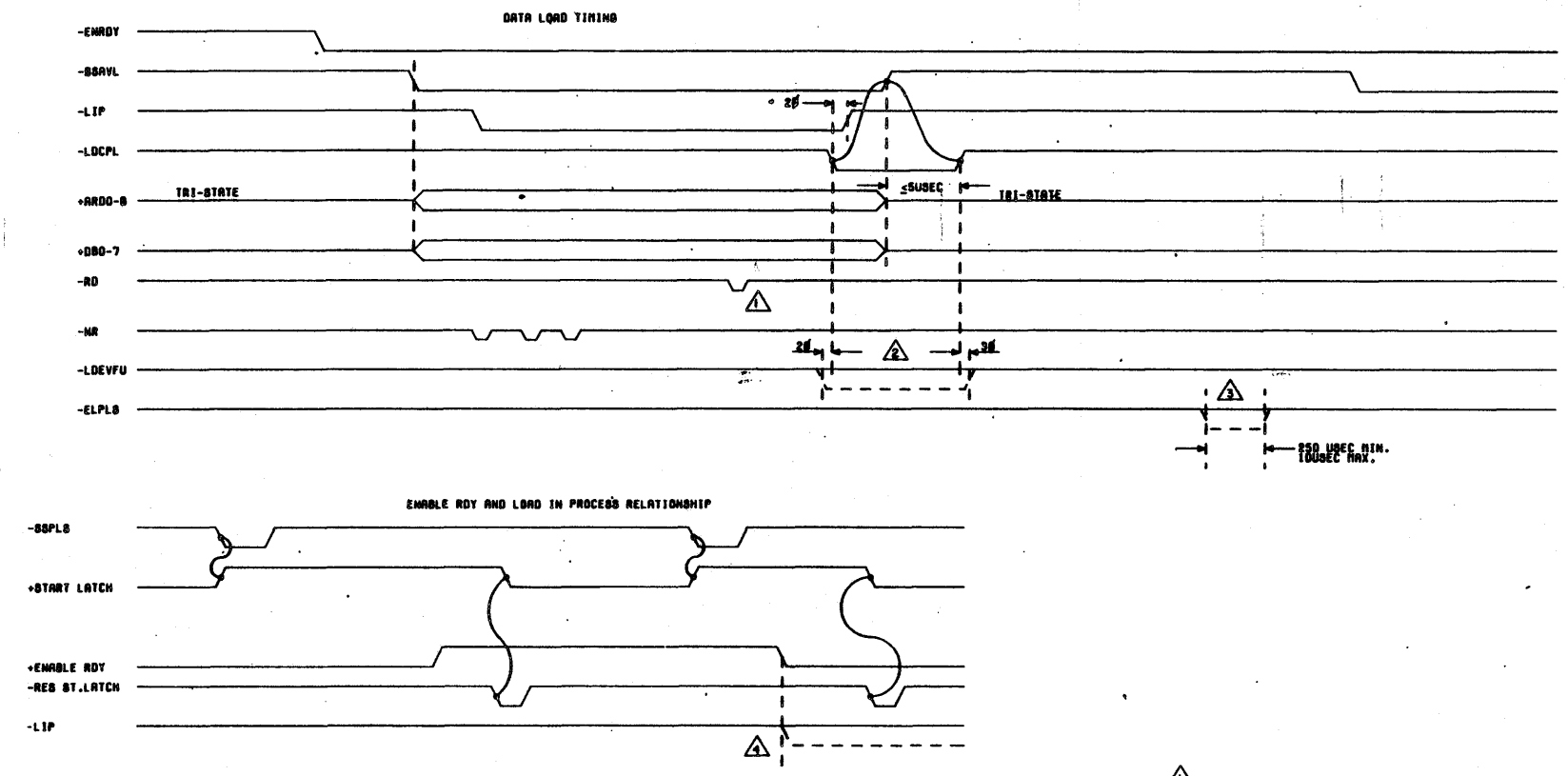

1. THE -RD IS OPTIONAL IT WOULD TYPICALLY BE GENERATED ONLY IF A STATUS BYTE READ IS REQUIRED
2. THE -LDEVFU SIGNAL IS ONLY PLACED ACTIVE LOW IF THE DATA BEING LOADED IS AN EVFU LOAD VERSUS PRINT DATA
3. IF THE DATA LOADED IS EVFU DATA, AN -ELPL8 WILL BE GENERATED PRIOR TO THE -BSAVL BEING PLACED ACTIVE IF THE EVFU DATA WAS LOADED SUCCESSFULLY
4. +ENABLE RDY BEING INACTIVE MUST PREVENT -LIP FROM BECOMING ACTIVE IF PREVIOUSLY INACTIVE

LOC.
CROSS REF NO. TD01

TIMING DIAGRAM
DATA LOAD TIMING

CODE IDENT	DWG NO	REV
C	44682272	A

SHEET 11 | CROSS REF NO TD01

FS.980X.44682272.ATD.01

44682272

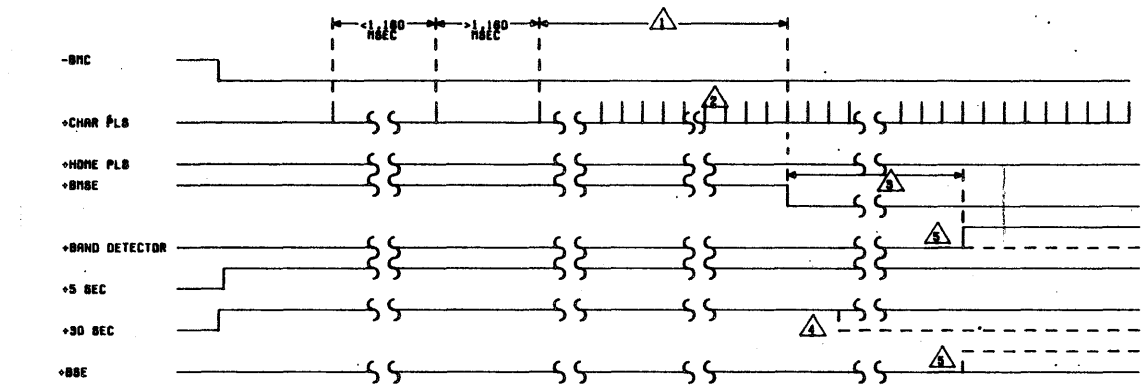

BAND UP TO SPEED TIMING

1. THE BMSE (BAND MOTOR SPEED ERROR)IS REMOVED ON THE 4TH HOME PULSE AFTER THE MOTOR SPEED HAS ENTERED THE SPEED RANGE MONITERED BY THE BAND TRACKING CPU (8048).
2. CHAR PLS TIMING IS REPRESENTIVE ONLY AND NOT DRAWN TO SCALE
3. THE BAND DETECTED SIGNAL IS ACTIVATED 1 HOME PULSE AFTER THE BMSE SIGNAL HAS BEEN REMOVED
4. IF THE 5 SEC TMR ELAPSES BEFORE THE BAND IS DETECTED THE MAIN CPU (8085A-2) ASSUMES THAT THE BAND CANNOT BE DETECTED AND INDICATES AN ERROR (BAND).
5. THE CHARACTER COUNT IS CHECKED AT HOME PULSE TIME FOR THE CORRECT COUNT.IF THE COUNT IS IN ERROR, BSE (BAND SYNC ERROR) WILL BE ACTIVATED.THIS ERROR COULD PREVENT A BAND DETECTION AS SHOWN
6. A WAIT STATE IN GENERATED ONLY IF ONE OF THE CHIP SELECTS REQUIRING A WAIT STATE IS ACTIVATED

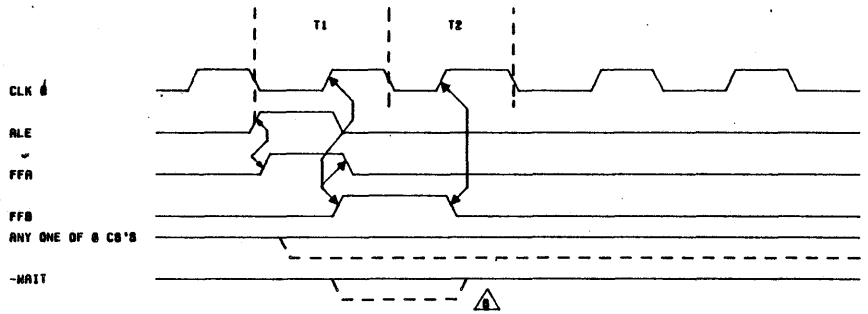

WAIT STATE GENERATION

CROSS REF NO.TD02 | LOC.

TIMING DIAGRAM
BAND UP TO SPEED/
WAIT STATE GENERATION

CODE IDENT	DWG NO	REV
C	44682272	A

SHEET 12 | CROSS REF NO TD02

44682272

11-15

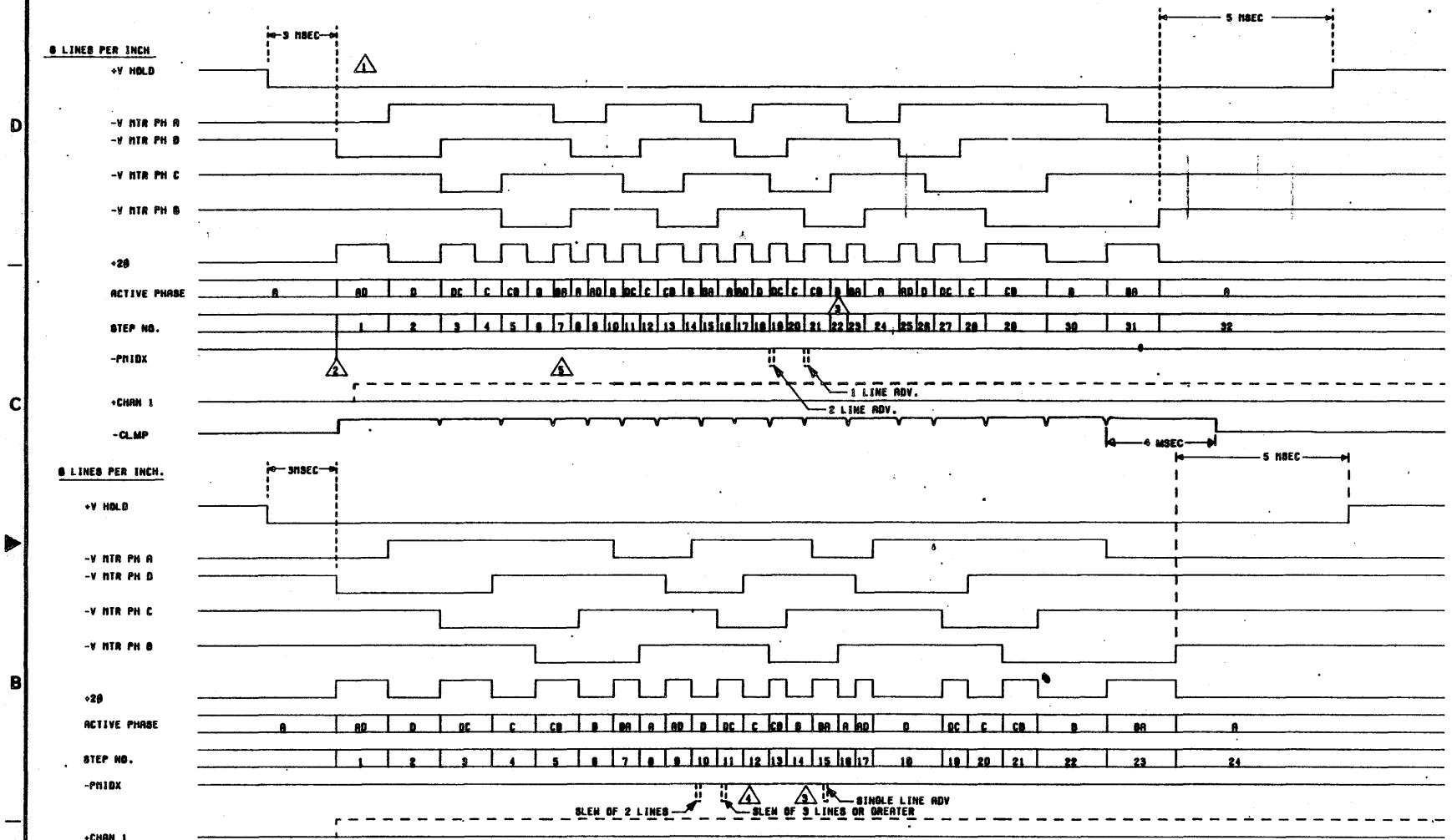

1. THE TIMING CHART DEPICTS A SINGLE LINE SPACE OF PAPER MOTION AT 6 OR 8 LINES PER INCH.
2. THE CHAN1 SIGNAL WILL ONLY BE GENERATED IF THE LINE SPACE IN PROCESS WILL MOVE THE PAPER TO THE TOP OF FORM (TOF) POSITION.
3. FOR MULTILINE SLEWS GREATER THAN 2 LINES THE STEP DURATION BECOMES CONSTANT AT STEP COUNT 15 OF THE SECOND LINE.
4. FOR MULTILINE 8 LPI SLEWS GREATER THAN 2 LINES THE STOP DECISION POINT (AND THE GENERATION OF -PMIDX) CHANGES TO COUNT 11. ALSO THE DECEL RAMP BECOMES IDENTICAL TO THE 6 LPI DECEL RAMP COUNTS 21 TO 32
5. FOR MULTILINE SLEWS THE STEP DURATION BECOMES CONSTANT AT COUNT 7 OF THE SECOND LINE.

LOC.
CROSS REF NO. TD03

TIMING DIAGRAM
VERTICAL STEPPER

CODE IDENT	DWG NO	REV
C	44682272	A
	SHEET 13	CROSS REF NO TD03

ES.360X.44682272.ATD.03

44682272

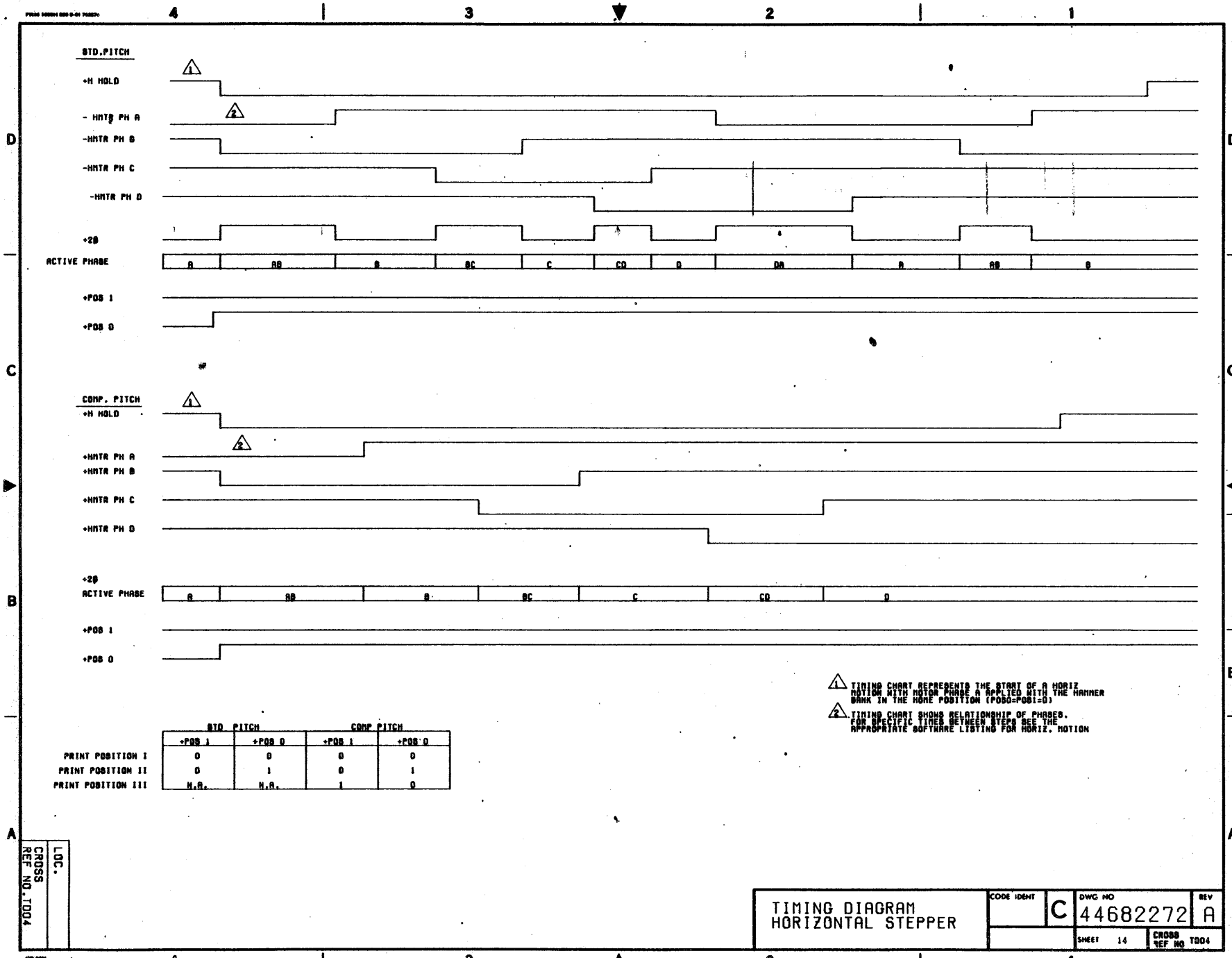

	STD PITCH		COMP PITCH	
	+POS 1	+POS 0	+POS 1	+POS 0
PRINT POSITION I	0	0	0	0
PRINT POSITION II	0	1	0	1
PRINT POSITION III	N.A.	N.A.	1	0

1. TIMING CHART REPRESENTS THE START OF A HORIZ MOTION WITH MOTOR PHASE A APPLIED WITH THE HAMMER BANK IN THE HOME POSITION (POS0=POS1=0)
2. TIMING CHART SHOWS RELATIONSHIP OF PHASES. FOR SPECIFIC TIMES BETWEEN STEPS SEE THE APPROPRIATE SOFTWARE LISTING FOR HORIZ. MOTION

CROSS REF NO. TD04 | LOC.

TIMING DIAGRAM
HORIZONTAL STEPPER

CODE IDENT	DWG NO	REV
C	44682272	A
	SHEET 14	CROSS REF NO TD04

44682272

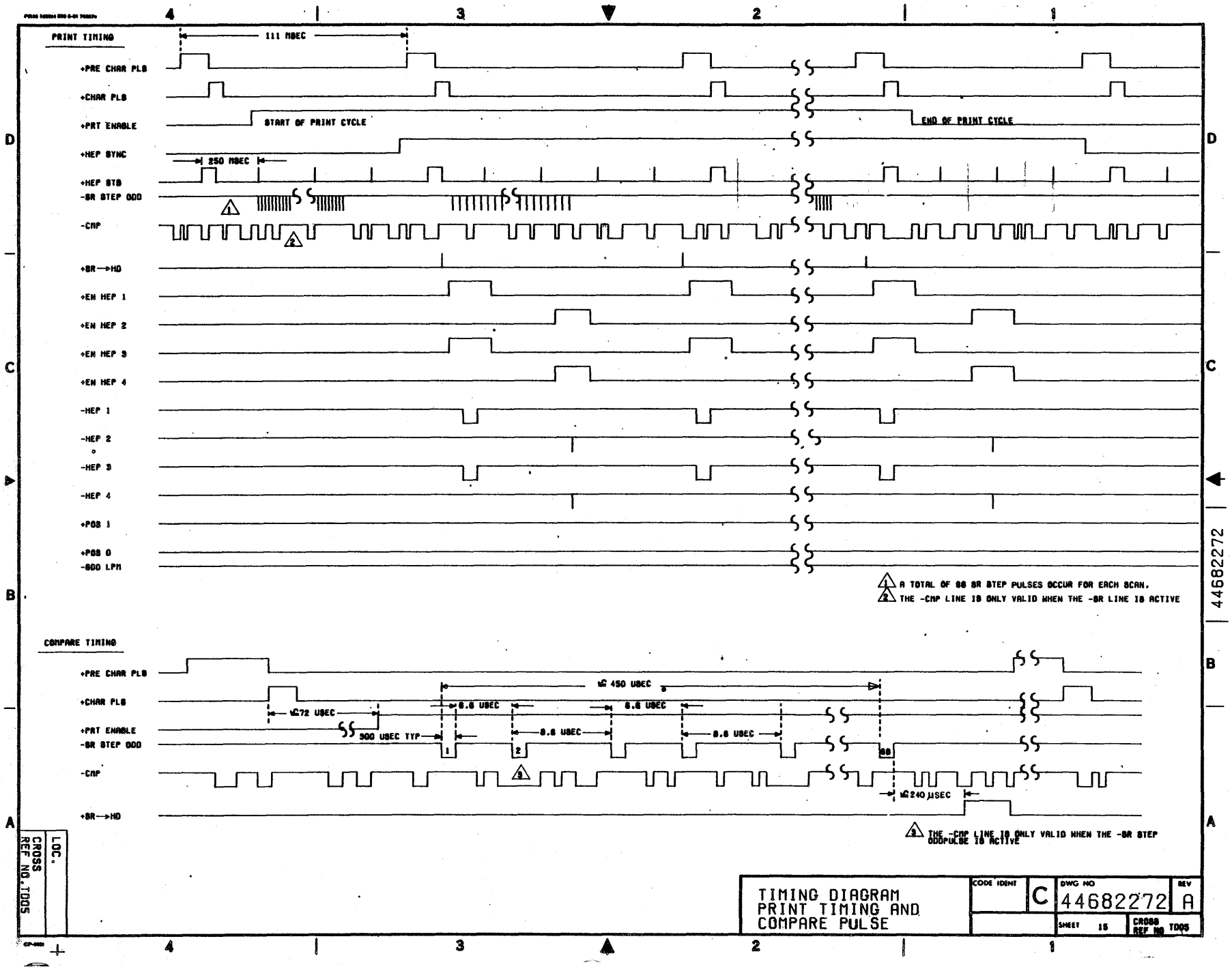
PRINT TIMING
111 MSEC
+PRE CHAR PLS
+CHAR PLS
+PRT ENABLE
START OF PRINT CYCLE
END OF PRINT CYCLE
+HEP SYNC
250 MSEC
+HEP STB
-SR STEP ODD
-CMP
+SR→HD
+EN HEP 1
+EN HEP 2
+EN HEP 3
+EN HEP 4
-HEP 1
-HEP 2
-HEP 3
-HEP 4
+POS 1
+POS 0
-600 LPM
1 A TOTAL OF 88 SR STEP PULSES OCCUR FOR EACH SCAN.
2 THE -CMP LINE IS ONLY VALID WHEN THE -SR LINE IS ACTIVE
COMPARE TIMING
+PRE CHAR PLS
+CHAR PLS
+PRT ENABLE
-SR STEP ODD
-CMP
+SR→HD
≤ 450 USEC
≤72 USEC
8.6 USEC
900 USEC TYP
≤240 µSEC
3 THE -CMP LINE IS ONLY VALID WHEN THE -SR STEP ODDPULSE IS ACTIVE
CROSS REF NO. TDOS
LOC.
TIMING DIAGRAM
PRINT TIMING AND
COMPARE PULSE
CODE IDENT
C
DWG NO
44682272
REV
A
SHEET 15
CROSS REF NO TDOS

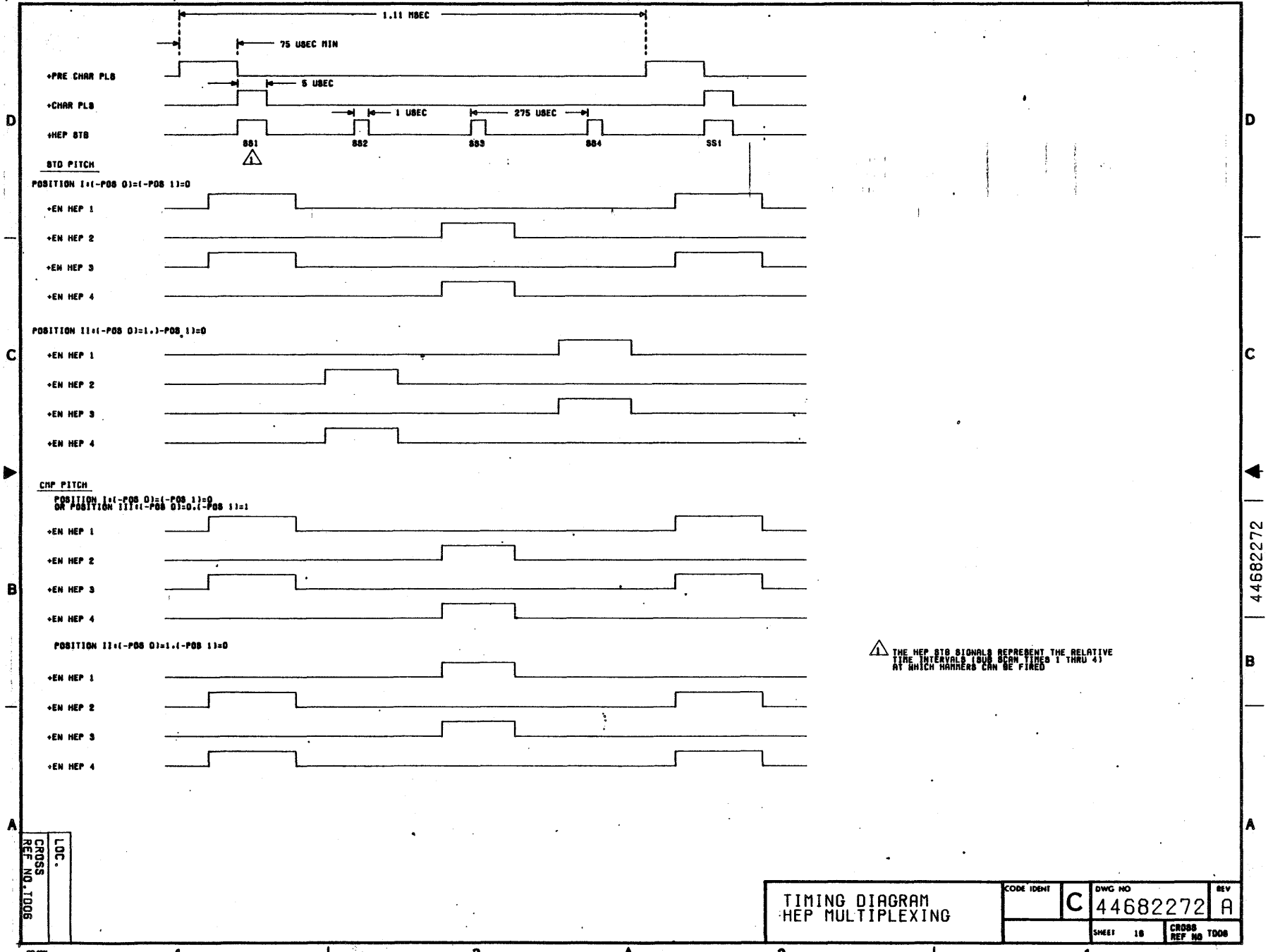
1.11 MSEC
75 USEC MIN
+PRE CHAR PLS
5 USEC
+CHAR PLS
1 USEC
275 USEC
+HEP STB
SS1
SS2
SS3
SS4
SS1
STD PITCH
POSITION I:(-POS 0)=(-POS 1)=0
+EN HEP 1
+EN HEP 2
+EN HEP 3
+EN HEP 4
POSITION II:(-POS 0)=1.)-POS 1)=0
+EN HEP 1
+EN HEP 2
+EN HEP 3
+EN HEP 4
CMP PITCH
POSITION I:(-POS 0)=(-POS 1)=0
OR POSITION III:(-POS 0)=0.(-POS 1)=1
+EN HEP 1
+EN HEP 2
+EN HEP 3
+EN HEP 4
POSITION II:(-POS 0)=1.(-POS 1)=0
+EN HEP 1
+EN HEP 2
+EN HEP 3
+EN HEP 4
1 THE HEP STB SIGNALS REPRESENT THE RELATIVE TIME INTERVALS (SUB SCAN TIMES 1 THRU 4) AT WHICH HAMMERS CAN BE FIRED
CROSS REF NO. TD06
LOC.
TIMING DIAGRAM
HEP MULTIPLEXING
CODE IDENT
C
DWG NO
44682272
REV
A
SHEET 18
CROSS REF NO TD08
4
3
2
1
A
B
C
D

44682272

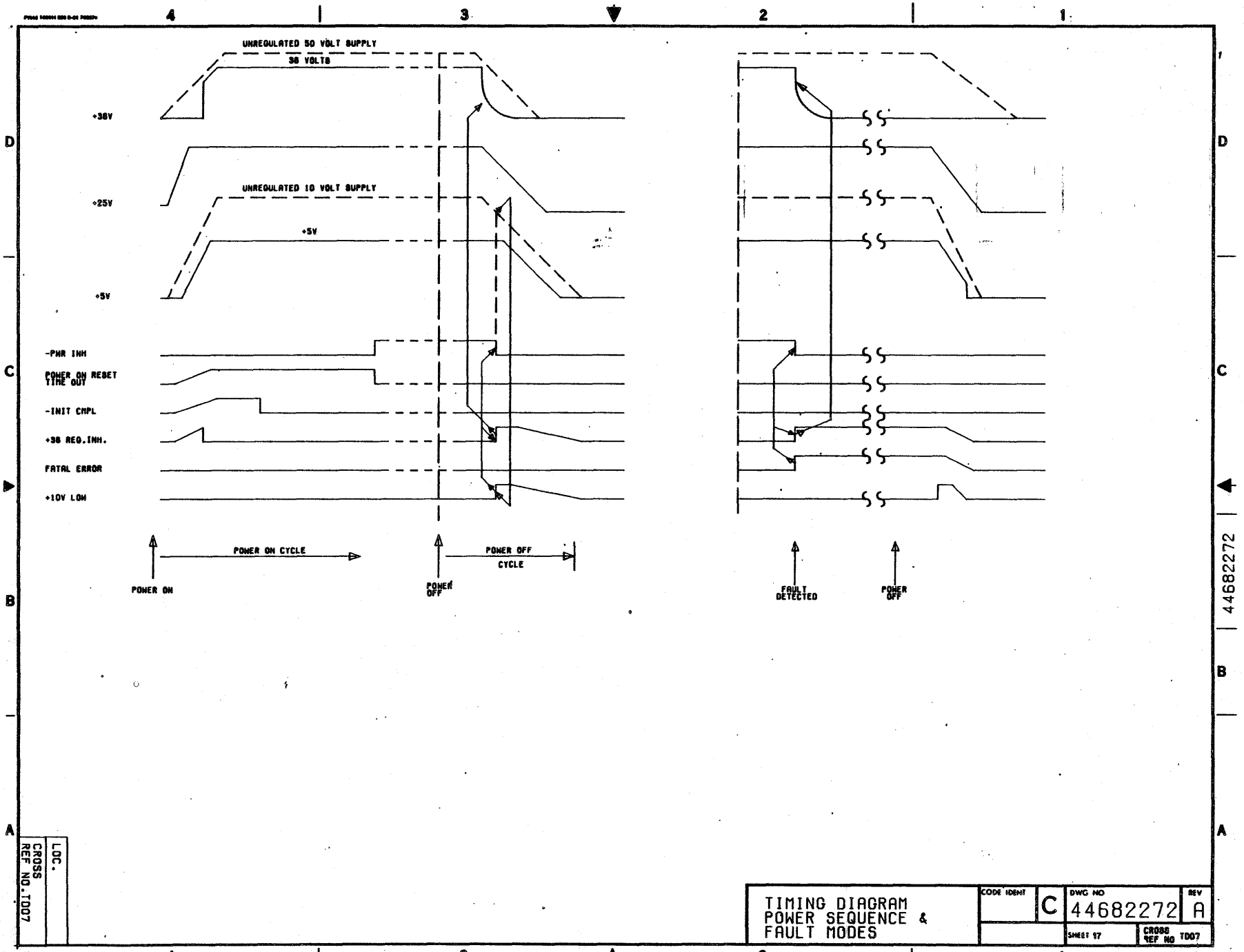
UNREGULATED 50 VOLT SUPPLY
36 VOLTS
+36V
UNREGULATED 10 VOLT SUPPLY
+25V
+5V
+5V
-PWR INH
POWER ON RESET TIME OUT
-INIT CMPL
+36 REG.INH.
FATAL ERROR
+10V LOW
POWER ON
POWER ON CYCLE
POWER OFF
POWER OFF CYCLE
FAULT DETECTED
POWER OFF
4
3
2
1
A
B
C
D
LOC.
CROSS REF NO. TDO7
TIMING DIAGRAM
POWER SEQUENCE &
FAULT MODES
CODE IDENT
C
DWG NO
44682272
REV
A
SHEET 17
CROSS REF NO TDO7

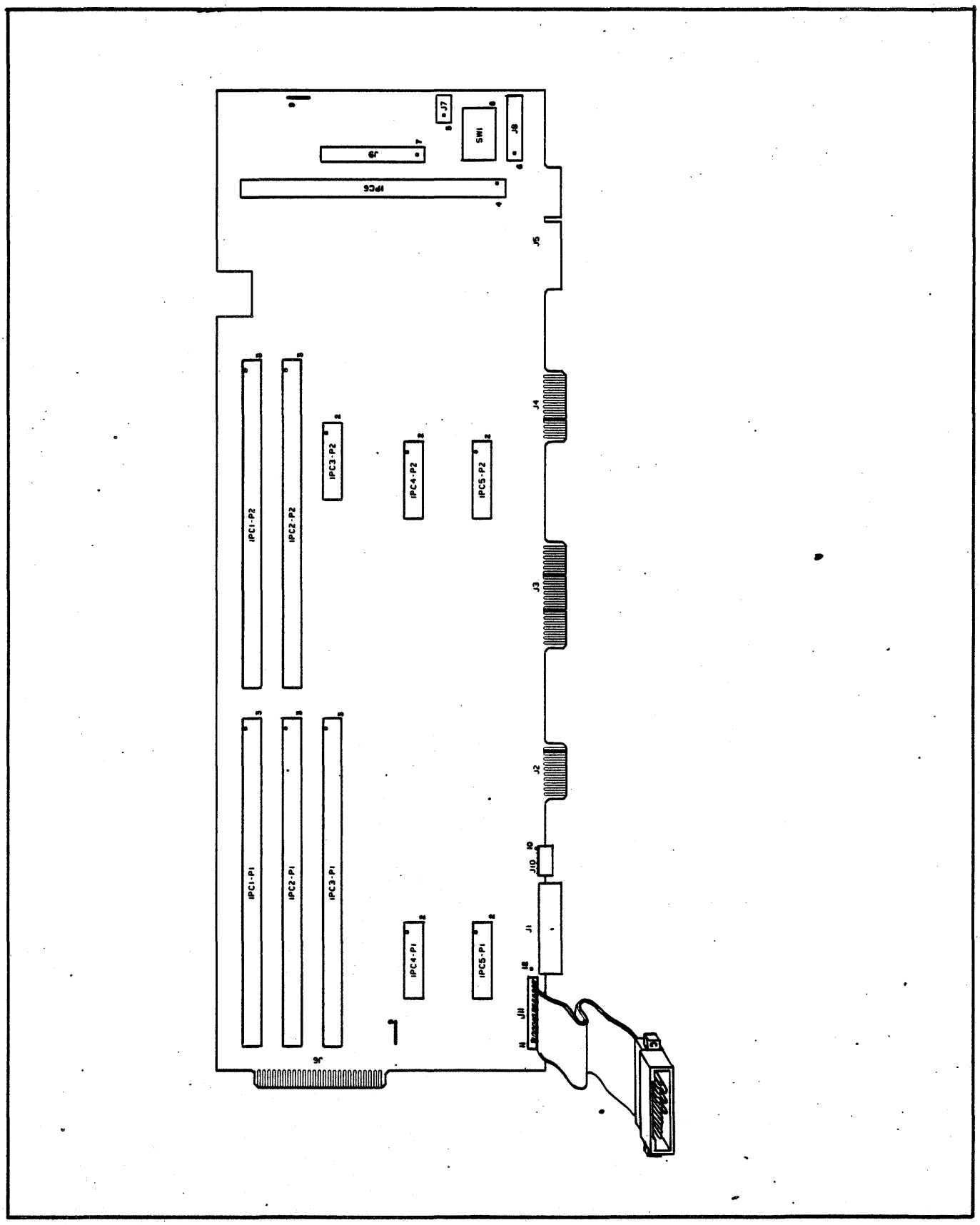

BACKPLANE PCB ASSEMBLY

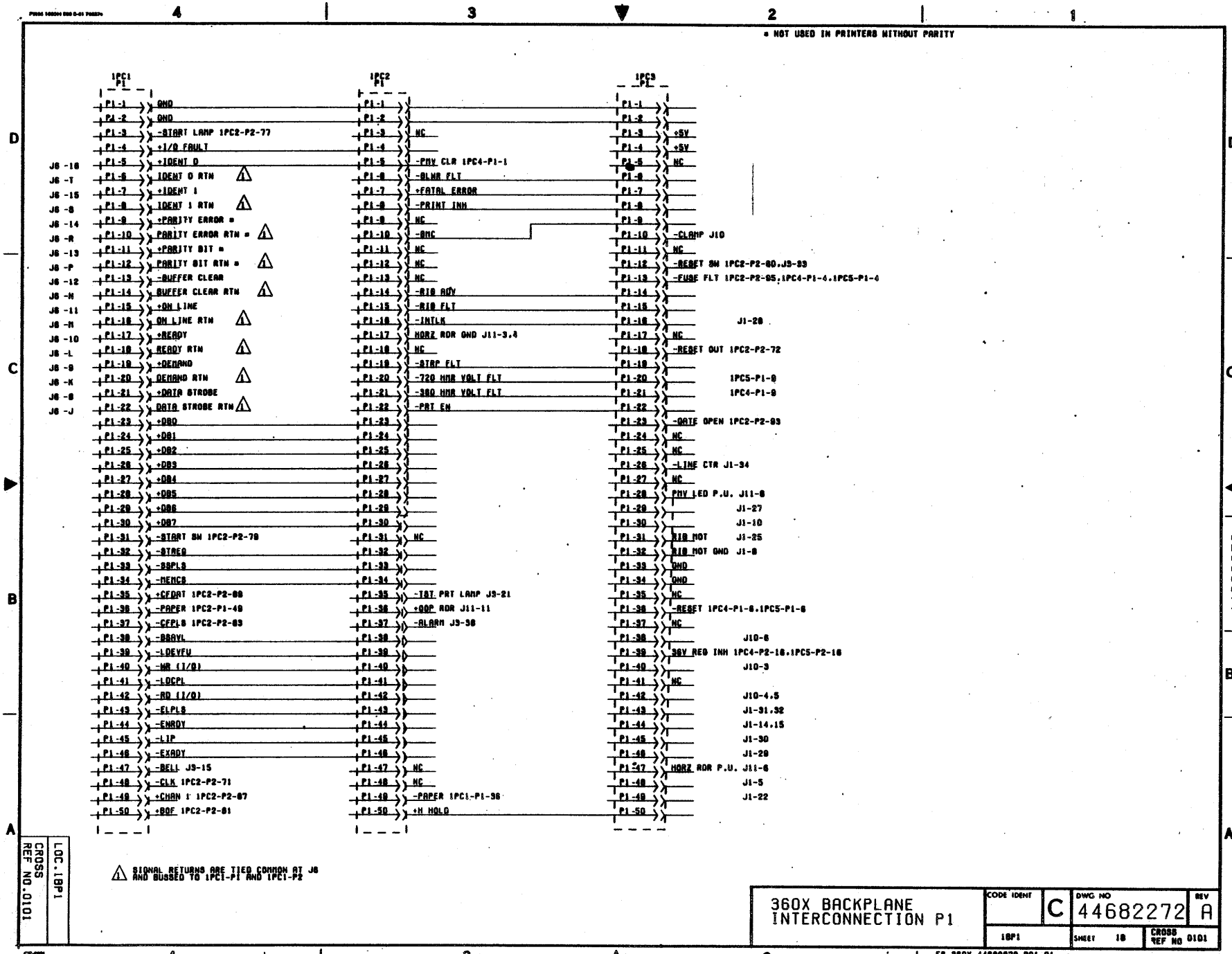
* NOT USED IN PRINTERS WITHOUT PARITY
1PC1 P1
1PC2 P1
1PC3 P1
P1-1 GND
P1-2 GND
P1-3 -START LAMP 1PC2-P2-77
P1-4 +I/O FAULT
P1-5 +IDENT 0
P1-6 IDENT 0 RTN
P1-7 +IDENT 1
P1-8 IDENT 1 RTN
P1-9 +PARITY ERROR *
P1-10 PARITY ERROR RTN *
P1-11 +PARITY BIT *
P1-12 PARITY BIT RTN *
P1-13 -BUFFER CLEAR
P1-14 BUFFER CLEAR RTN
P1-15 +ON LINE
P1-16 ON LINE RTN
P1-17 +READY
P1-18 READY RTN
P1-19 +DEMAND
P1-20 DEMAND RTN
P1-21 +DATA STROBE
P1-22 DATA STROBE RTN
P1-23 +DB0
P1-24 +DB1
P1-25 +DB2
P1-26 +DB3
P1-27 +DB4
P1-28 +DB5
P1-29 +DB6
P1-30 +DB7
P1-31 -START SW 1PC2-P2-78
P1-32 -STREQ
P1-33 -SSPLS
P1-34 -MENCS
P1-35 +CFDAT 1PC2-P2-88
P1-36 -PAPER 1PC2-P1-49
P1-37 -CFPLS 1PC2-P2-83
P1-38 -SBAVL
P1-39 -LDEVFU
P1-40 -WR (I/O)
P1-41 -LOCPL
P1-42 -RD (I/O)
P1-43 -ELPLS
P1-44 -ENRDY
P1-45 -LIP
P1-46 -EXRDY
P1-47 -BELL J3-15
P1-48 -CLK 1PC2-P2-71
P1-49 +CHAN 1 1PC2-P2-87
P1-50 +BOF 1PC2-P2-81
J6 -T
J6 -S
J6 -R
J6 -P
J6 -N
J6 -M
J6 -L
J6 -K
J6 -J
P1-1 NC
P1-3 NC
P1-5 -PNV CLR 1PC4-P1-1
P1-6 -BLWR FLT
P1-7 +FATAL ERROR
P1-8 -PRINT INH
P1-9 NC
P1-10 -BMC
P1-11 NC
P1-12 NC
P1-13 NC
P1-14 -RIB ADV
P1-15 -RIB FLT
P1-16 -INTLK
P1-17 HORZ RDR GND J11-3,4
P1-18 NC
P1-19 -STRP FLT
P1-20 -720 HMR VOLT FLT
P1-21 -360 HMR VOLT FLT
P1-22 -PRT EN
P1-31 NC
P1-35 -TBT PRT LAMP J3-21
P1-36 +OOP RDR J11-11
P1-37 -ALARM J3-38
P1-47 NC
P1-48 NC
P1-49 -PAPER 1PC1-P1-36
P1-50 +H HOLD
P1-1 GND
P1-2 GND
P1-3 +5V
P1-4 +5V
P1-5 NC
P1-10 -CLAMP J10
P1-11 NC
P1-12 -RESET SW 1PC2-P2-80,J3-33
P1-13 -FUSE FLT 1PC2-P2-85;1PC4-P1-4,1PC5-P1-4
P1-16 J1-28
P1-17 NC
P1-18 -RESET OUT 1PC2-P2-72
P1-20 1PC5-P1-8
P1-21 1PC4-P1-8
P1-23 -GATE OPEN 1PC2-P2-93
P1-24 NC
P1-25 NC
P1-26 -LINE CTR J1-34
P1-27 NC
P1-28 PNV LED P.U. J11-8
P1-29 J1-27
P1-30 J1-10
P1-31 RIB MOT J1-25
P1-32 RIB MOT GND J1-8
P1-33 GND
P1-34 GND
P1-35 NC
P1-36 -RESET 1PC4-P1-8,1PC5-P1-8
P1-37 NC
P1-38 J10-8
P1-39 36V REG INH 1PC4-P2-16,1PC5-P2-16
P1-40 J10-3
P1-41 NC
P1-42 J10-4,5
P1-43 J1-31,32
P1-44 J1-14,15
P1-45 J1-30
P1-46 J1-29
P1-47 HORZ RDR P.U. J11-6
P1-48 J1-5
P1-49 J1-22
⚠ SIGNAL RETURNS ARE TIED COMMON AT J6 AND BUSSED TO 1PC1-P1 AND 1PC1-P2
CROSS REF NO.0101
LOC.1BP1
360X BACKPLANE INTERCONNECTION P1
CODE IDENT
C
DWG NO
44682272
REV
A
1BP1
SHEET 18
CROSS REF NO 0101
E8.360X.44682272.R01.01
11-22
44682272

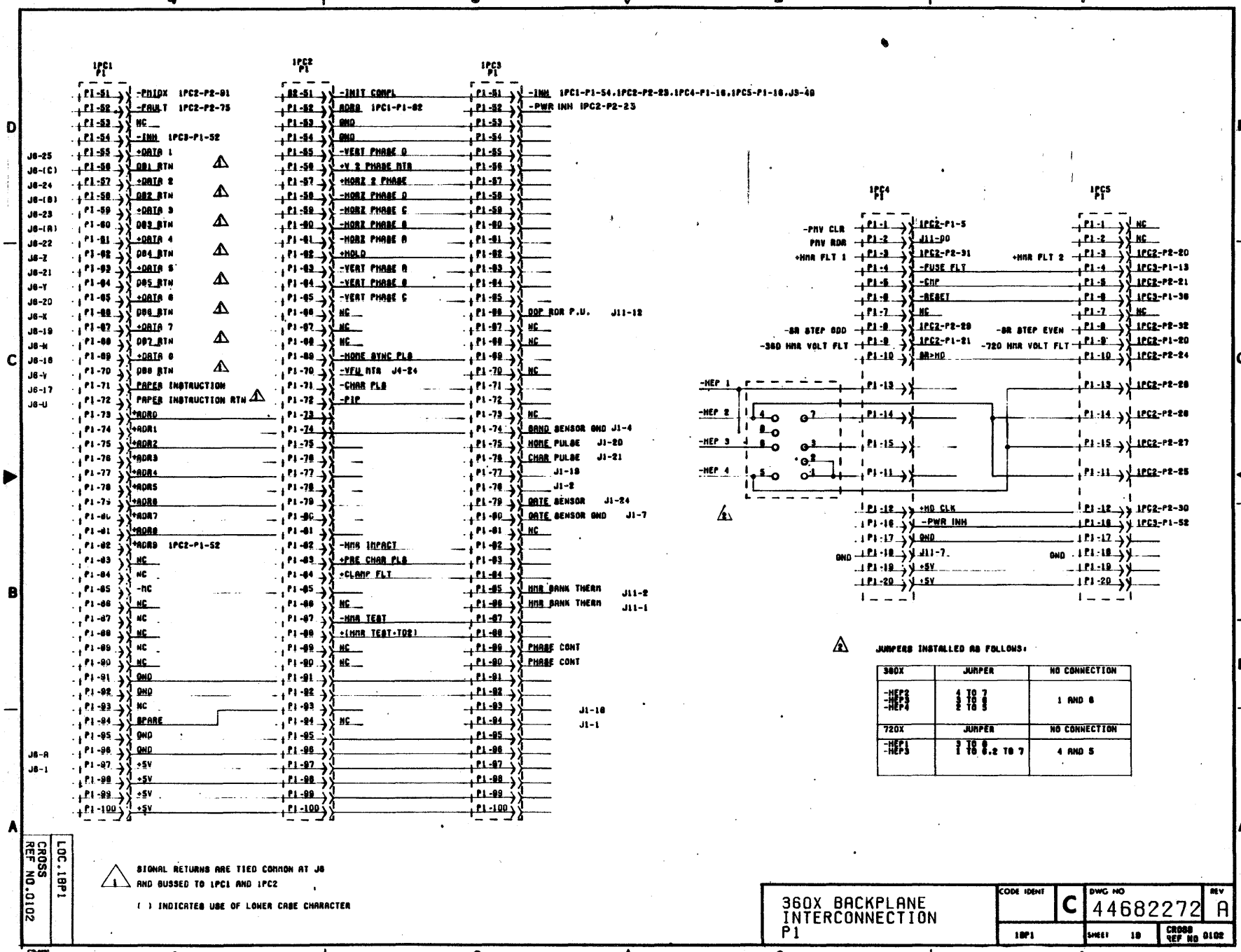

360X	JUMPER	NO CONNECTION
-HEP2 -HEP3 -HEP4	4 TO 7 8 TO 6 9 TO 5	1 AND 8
720X	JUMPER	NO CONNECTION
-HEP1 -HEP3	9 TO 6 1 TO 8.2 TO 7	4 AND 5

JUMPERS INSTALLED AS FOLLOWS:

1. SIGNAL RETURNS ARE TIED COMMON AT J8 AND BUSSED TO 1PC1 AND 1PC2

( ) INDICATES USE OF LOWER CASE CHARACTER

CROSS REF NO. 0102

LOC. 18P1

360X BACKPLANE INTERCONNECTION P1	CODE IDENT C	DWG NO 44682272	REV A
	18P1	SHEET 18	CROSS REF NO 0102

44682272

11-23

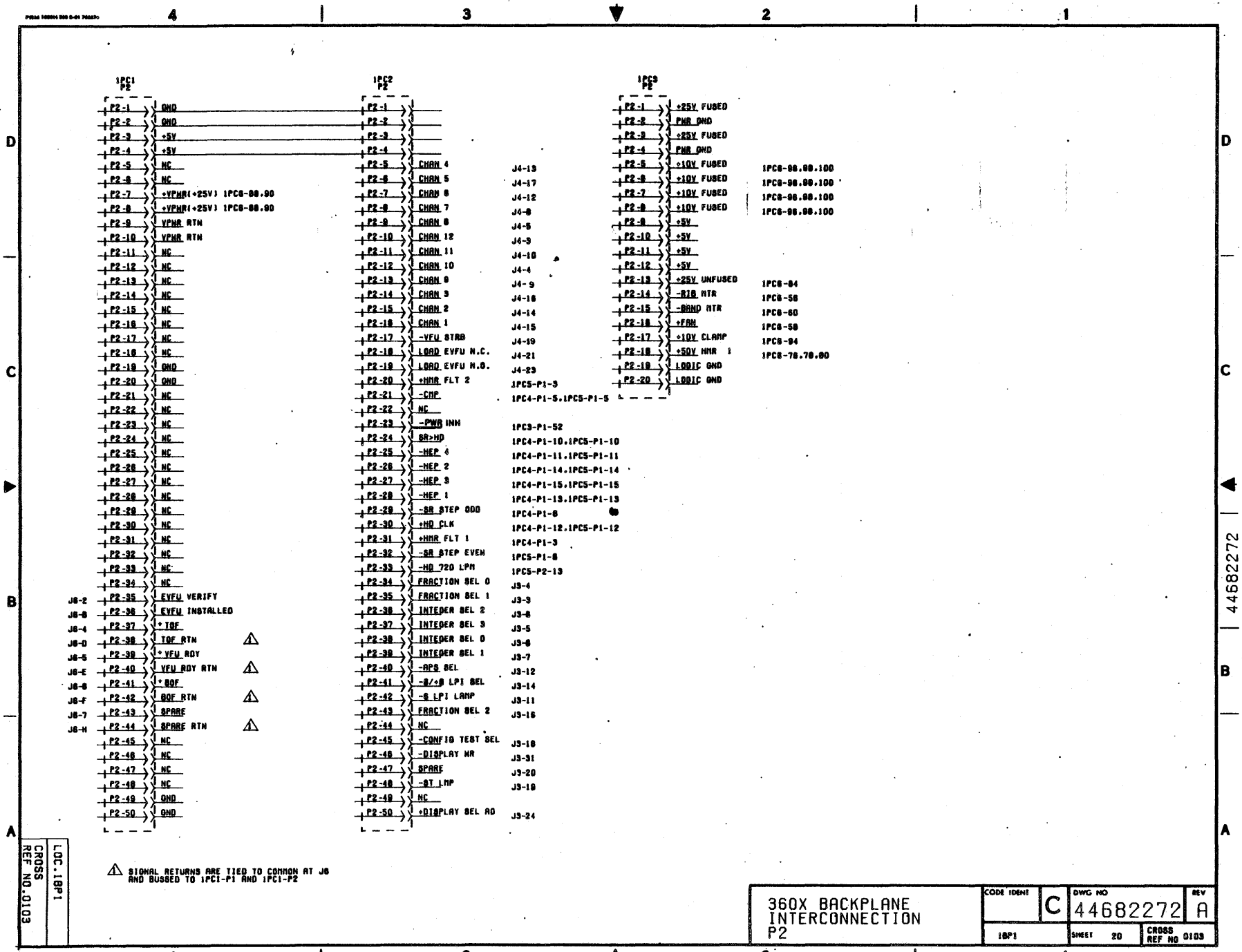
1PC1 P2
1PC2 P2
1PC3 P2
P2-1 GND
P2-2 GND
P2-3 +5V
P2-4 +5V
P2-5 NC
P2-6 NC
P2-7 +VPWR(+25V) 1PC6-88,90
P2-8 +VPWR(+25V) 1PC6-88,90
P2-9 VPWR RTN
P2-10 VPWR RTN
P2-11 NC
P2-12 NC
P2-13 NC
P2-14 NC
P2-15 NC
P2-16 NC
P2-17 NC
P2-18 NC
P2-19 GND
P2-20 GND
P2-21 NC
P2-22 NC
P2-23 NC
P2-24 NC
P2-25 NC
P2-26 NC
P2-27 NC
P2-28 NC
P2-29 NC
P2-30 NC
P2-31 NC
P2-32 NC
P2-33 NC
P2-34 NC
P2-35 EVFU VERIFY
P2-36 EVFU INSTALLED
P2-37 *TOF
P2-38 TOF RTN
P2-39 *VFU RDY
P2-40 VFU RDY RTN
P2-41 *BOF
P2-42 BOF RTN
P2-43 SPARE
P2-44 SPARE RTN
P2-45 NC
P2-46 NC
P2-47 NC
P2-48 NC
P2-49 GND
P2-50 GND
J8-2
J8-B
J8-4
J8-D
J8-5
J8-E
J8-6
J8-F
J8-7
J8-H
P2-1
P2-2
P2-3
P2-4
P2-5 CHAN 4
P2-6 CHAN 5
P2-7 CHAN 6
P2-8 CHAN 7
P2-9 CHAN 8
P2-10 CHAN 12
P2-11 CHAN 11
P2-12 CHAN 10
P2-13 CHAN 9
P2-14 CHAN 3
P2-15 CHAN 2
P2-16 CHAN 1
P2-17 -VFU STRB
P2-18 LOAD EVFU N.C.
P2-19 LOAD EVFU N.O.
P2-20 +HMR FLT 2
P2-21 -CMP
P2-22 NC
P2-23 -PWR INH
P2-24 BR>HD
P2-25 -HEP 4
P2-26 -HEP 2
P2-27 -HEP 8
P2-28 -HEP 1
P2-29 -BR STEP ODD
P2-30 +HD CLK
P2-31 +HMR FLT 1
P2-32 -BR STEP EVEN
P2-33 -HD 720 LPM
P2-34 FRACTION SEL 0
P2-35 FRACTION SEL 1
P2-36 INTEGER SEL 2
P2-37 INTEGER SEL 3
P2-38 INTEGER SEL 0
P2-39 INTEGER SEL 1
P2-40 -APS SEL
P2-41 -8/+8 LPI SEL
P2-42 -8 LPI LAMP
P2-43 FRACTION SEL 2
P2-44 NC
P2-45 -CONFIG TEST SEL
P2-46 -DISPLAY WR
P2-47 SPARE
P2-48 -BT LMP
P2-49 NC
P2-50 +DISPLAY SEL A0
J4-13
J4-17
J4-12
J4-8
J4-6
J4-3
J4-10
J4-4
J4-9
J4-16
J4-14
J4-15
J4-19
J4-21
J4-23
1PC5-P1-3
1PC4-P1-5,1PC5-P1-5
1PC3-P1-52
1PC4-P1-10,1PC5-P1-10
1PC4-P1-11,1PC5-P1-11
1PC4-P1-14,1PC5-P1-14
1PC4-P1-15,1PC5-P1-15
1PC4-P1-13,1PC5-P1-13
1PC4-P1-6
1PC4-P1-12,1PC5-P1-12
1PC4-P1-3
1PC5-P1-8
1PC5-P2-13
J3-4
J3-3
J3-8
J3-5
J3-6
J3-7
J3-12
J3-14
J3-11
J3-16
J3-18
J3-31
J3-20
J3-19
J3-24
P2-1 +25V FUSED
P2-2 PWR GND
P2-3 +25V FUSED
P2-4 PWR GND
P2-5 +10V FUSED
P2-6 +10V FUSED
P2-7 +10V FUSED
P2-8 +10V FUSED
P2-9 +5V
P2-10 +5V
P2-11 +5V
P2-12 +5V
P2-13 +25V UNFUSED
P2-14 -R1B RTR
P2-15 -BAND RTR
P2-16 +FAN
P2-17 +10V CLAMP
P2-18 +50V HMR 1
P2-19 LOGIC GND
P2-20 LOGIC GND
1PC6-86,88,100
1PC6-86,88,100
1PC6-86,88,100
1PC6-86,88,100
1PC6-84
1PC6-56
1PC6-60
1PC6-58
1PC6-94
1PC6-76,78,80
⚠ SIGNAL RETURNS ARE TIED TO COMMON AT J8 AND BUSSED TO 1PC1-P1 AND 1PC1-P2
LOC.1BP1
CROSS REF NO.0103
360X BACKPLANE INTERCONNECTION P2
CODE IDENT C
DWG NO 44682272
REV A
1BP1
SHEET 20
CROSS REF NO 0103
11-24
44682272

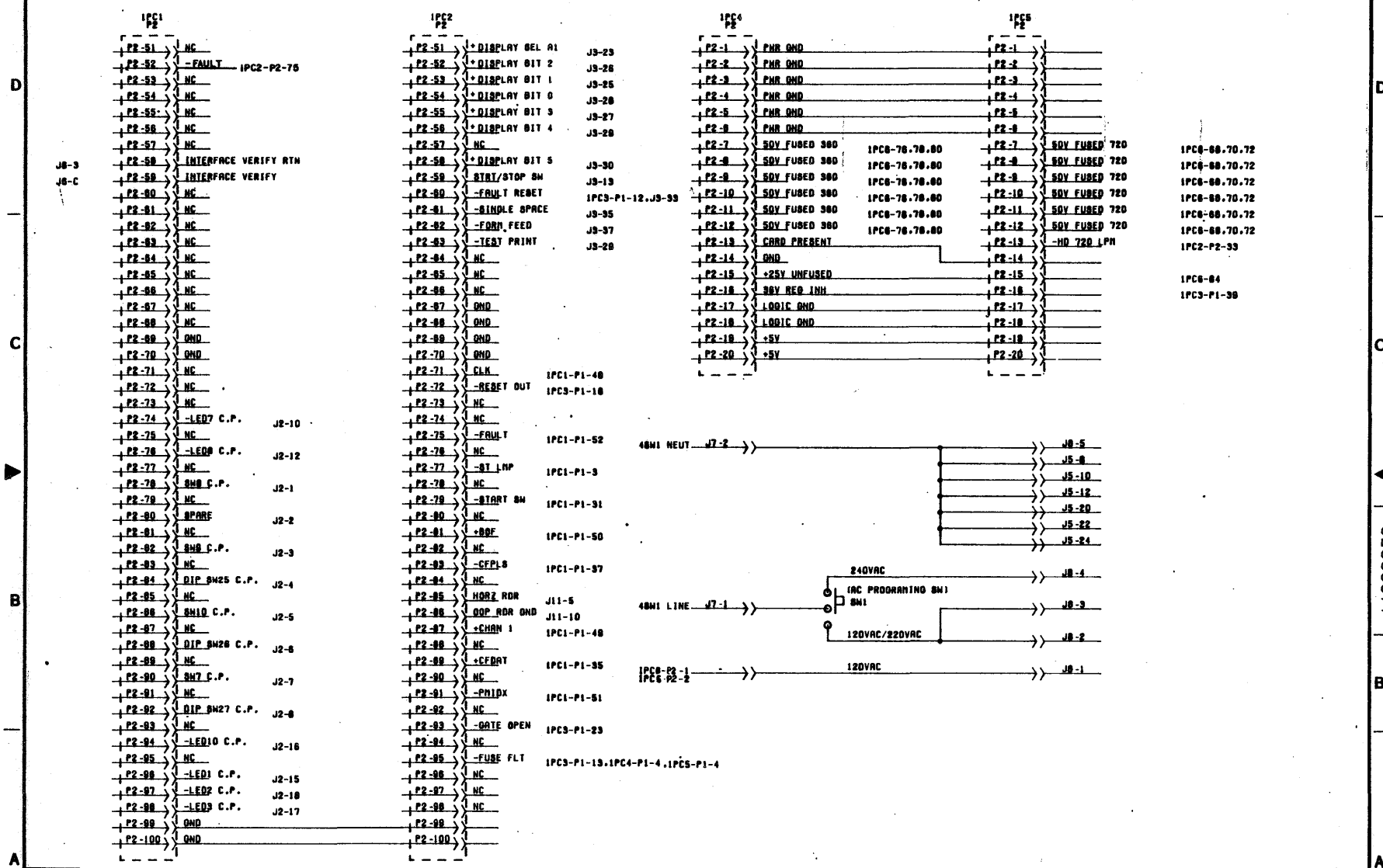

11-25

44682272

CROSS REF NO.0104

LOC.1BP1

360X BACKPLANE INTERCONNECTION P2

CODE IDENT	DWG NO	REV
C	44682272	A
1BP1	SHEET 21	CROSS REF NO 0104

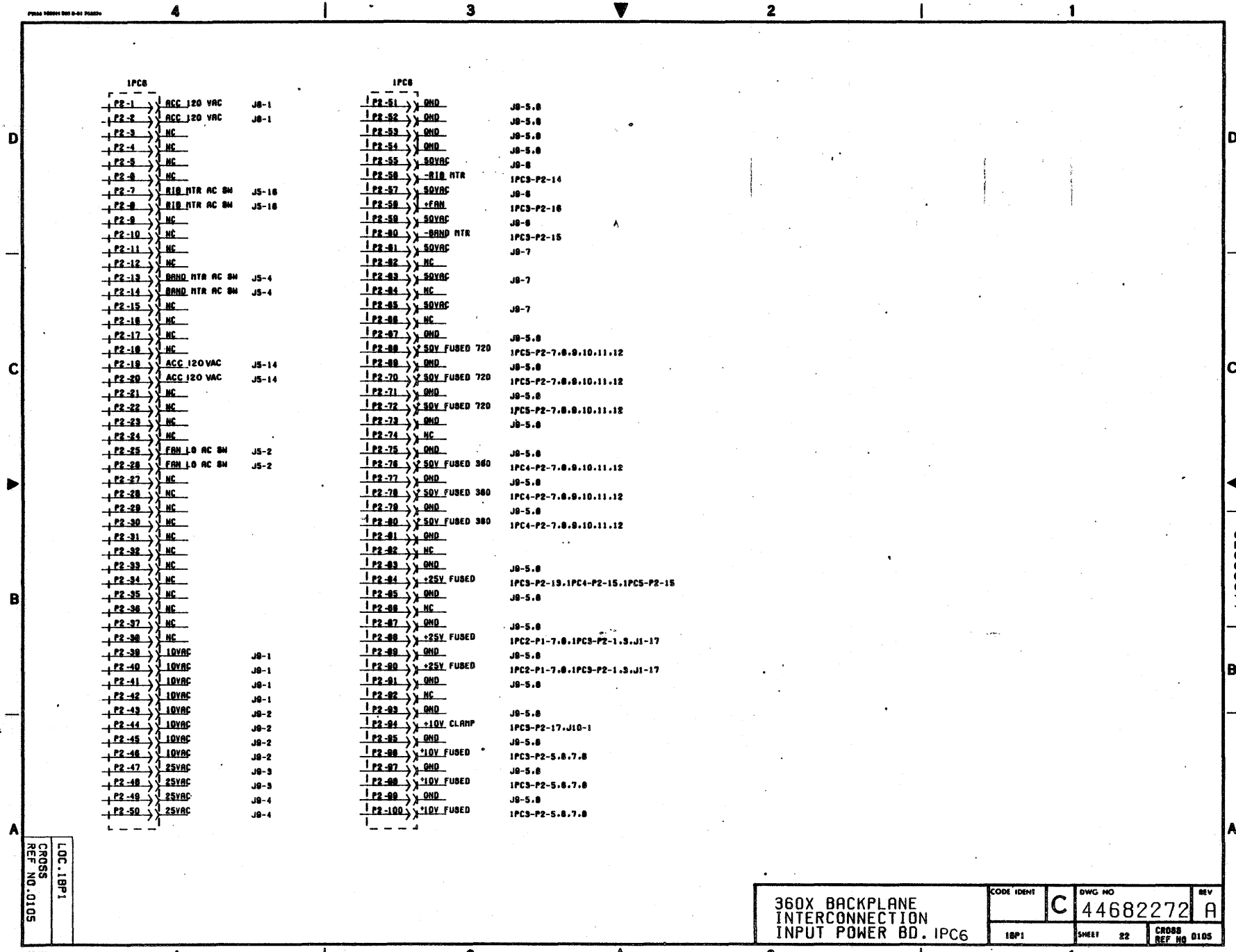
4
3
2
1
D
C
B
A
IPC6
P2-1 ACC 120 VAC J8-1
P2-2 ACC 120 VAC J8-1
P2-3 NC
P2-4 NC
P2-5 NC
P2-6 NC
P2-7 RIB MTR AC SW J5-16
P2-8 RIB MTR AC SW J5-16
P2-9 NC
P2-10 NC
P2-11 NC
P2-12 NC
P2-13 BAND MTR AC SW J5-4
P2-14 BAND MTR AC SW J5-4
P2-15 NC
P2-16 NC
P2-17 NC
P2-18 NC
P2-19 ACC 120VAC J5-14
P2-20 ACC 120 VAC J5-14
P2-21 NC
P2-22 NC
P2-23 NC
P2-24 NC
P2-25 FAN LO AC SW J5-2
P2-26 FAN LO AC SW J5-2
P2-27 NC
P2-28 NC
P2-29 NC
P2-30 NC
P2-31 NC
P2-32 NC
P2-33 NC
P2-34 NC
P2-35 NC
P2-36 NC
P2-37 NC
P2-38 NC
P2-39 10VAC J8-1
P2-40 10VAC J8-1
P2-41 10VAC J8-1
P2-42 10VAC J8-1
P2-43 10VAC J8-2
P2-44 10VAC J8-2
P2-45 10VAC J8-2
P2-46 10VAC J8-2
P2-47 25VAC J8-3
P2-48 25VAC J8-3
P2-49 25VAC J8-4
P2-50 25VAC J8-4
IPC6
P2-51 GND J8-5,8
P2-52 GND J8-5,8
P2-53 GND J8-5,8
P2-54 GND J8-5,8
P2-55 50VAC J8-6
P2-56 -RIB MTR 1PC3-P2-14
P2-57 50VAC J8-6
P2-58 +FAN 1PC3-P2-16
P2-59 50VAC J8-6
P2-60 -BAND MTR 1PC3-P2-15
P2-61 50VAC J8-7
P2-62 NC
P2-63 50VAC J8-7
P2-64 NC
P2-65 50VAC J8-7
P2-66 NC
P2-67 GND J8-5,8
P2-68 50V FUSED 720 1PC5-P2-7,8,9,10,11,12
P2-69 GND J8-5,8
P2-70 50V FUSED 720 1PC5-P2-7,8,9,10,11,12
P2-71 GND J8-5,8
P2-72 50V FUSED 720 1PC5-P2-7,8,9,10,11,12
P2-73 GND J8-5,8
P2-74 NC
P2-75 GND J8-5,8
P2-76 50V FUSED 360 1PC4-P2-7,8,9,10,11,12
P2-77 GND J8-5,8
P2-78 50V FUSED 360 1PC4-P2-7,8,9,10,11,12
P2-79 GND J8-5,8
P2-80 50V FUSED 360 1PC4-P2-7,8,9,10,11,12
P2-81 GND
P2-82 NC
P2-83 GND J8-5,8
P2-84 +25V FUSED 1PC3-P2-13,1PC4-P2-15,1PC5-P2-15
P2-85 GND J8-5,8
P2-86 NC
P2-87 GND J8-5,8
P2-88 +25V FUSED 1PC2-P1-7,8,1PC3-P2-1,3,J1-17
P2-89 GND J8-5,8
P2-90 +25V FUSED 1PC2-P1-7,8,1PC3-P2-1,3,J1-17
P2-91 GND J8-5,8
P2-92 NC
P2-93 GND J8-5,8
P2-94 +10V CLAMP 1PC3-P2-17,J10-1
P2-95 GND J8-5,8
P2-96 +10V FUSED 1PC3-P2-5,8,7,8
P2-97 GND J8-5,8
P2-98 +10V FUSED 1PC3-P2-5,8,7,8
P2-99 GND J8-5,8
P2-100 +10V FUSED 1PC3-P2-5,8,7,8
LOC.1BP1
CROSS REF NO.0105
360X BACKPLANE INTERCONNECTION INPUT POWER BD. IPC6
CODE IDENT C
DWG NO 44682272
REV A
1BP1
SHEET 22
CROSS REF NO 0105
44682272
11-26

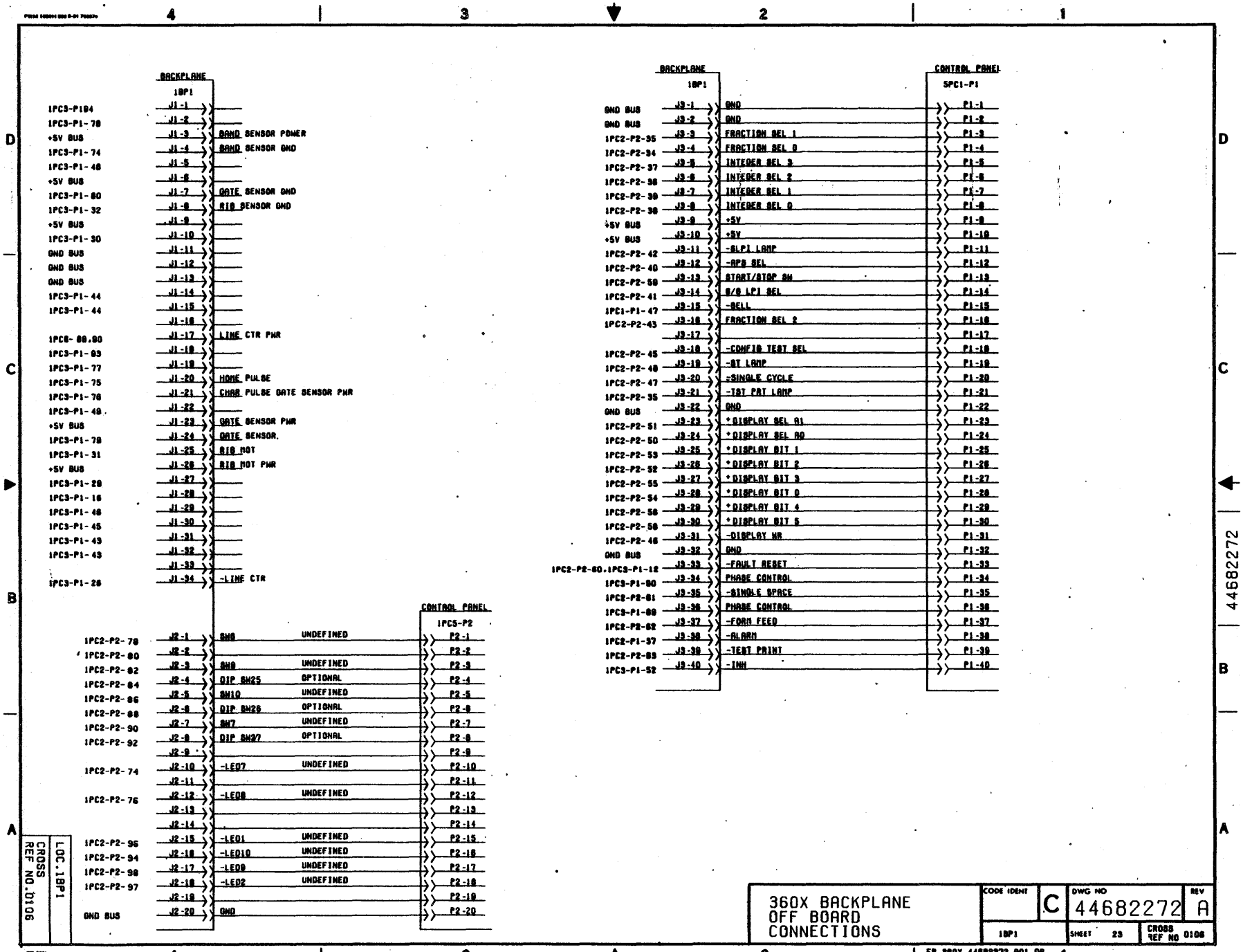
BACKPLANE
1BP1
1PC3-P1B4
1PC3-P1-78
+5V BUS
1PC3-P1-74
1PC3-P1-48
+5V BUS
1PC3-P1-80
1PC3-P1-32
+5V BUS
1PC3-P1-30
GND BUS
GND BUS
GND BUS
1PC3-P1-44
1PC3-P1-44
1PC6-88.80
1PC3-P1-83
1PC3-P1-77
1PC3-P1-75
1PC3-P1-76
1PC3-P1-49
+5V BUS
1PC3-P1-78
1PC3-P1-31
+5V BUS
1PC3-P1-29
1PC3-P1-16
1PC3-P1-46
1PC3-P1-45
1PC3-P1-43
1PC3-P1-43
1PC3-P1-28
J1-1
J1-2
J1-3
J1-4
J1-5
J1-6
J1-7
J1-8
J1-9
J1-10
J1-11
J1-12
J1-13
J1-14
J1-15
J1-16
J1-17
J1-18
J1-19
J1-20
J1-21
J1-22
J1-23
J1-24
J1-25
J1-26
J1-27
J1-28
J1-29
J1-30
J1-31
J1-32
J1-33
J1-34
BAND SENSOR POWER
BAND SENSOR GND
GATE SENSOR GND
RIB SENSOR GND
LINE CTR PWR
HOME PULSE
CHAR PULSE GATE SENSOR PWR
GATE SENSOR PWR
GATE SENSOR
RIB MOT
RIB MOT PWR
-LINE CTR
CONTROL PANEL
1PC5-P2
1PC2-P2-78
1PC2-P2-80
1PC2-P2-82
1PC2-P2-84
1PC2-P2-86
1PC2-P2-88
1PC2-P2-90
1PC2-P2-92
1PC2-P2-74
1PC2-P2-76
1PC2-P2-96
1PC2-P2-94
1PC2-P2-98
1PC2-P2-97
GND BUS
J2-1
J2-2
J2-3
J2-4
J2-5
J2-6
J2-7
J2-8
J2-9
J2-10
J2-11
J2-12
J2-13
J2-14
J2-15
J2-16
J2-17
J2-18
J2-19
J2-20
SW8 UNDEFINED
SW9 UNDEFINED
DIP SW25 OPTIONAL
SW10 UNDEFINED
DIP SW26 OPTIONAL
SW7 UNDEFINED
DIP SW27 OPTIONAL
-LED7 UNDEFINED
-LED8 UNDEFINED
-LED1 UNDEFINED
-LED10 UNDEFINED
-LED9 UNDEFINED
-LED2 UNDEFINED
GND
P2-1
P2-2
P2-3
P2-4
P2-5
P2-6
P2-7
P2-8
P2-9
P2-10
P2-11
P2-12
P2-13
P2-14
P2-15
P2-16
P2-17
P2-18
P2-19
P2-20
BACKPLANE
1BP1
GND BUS
GND BUS
1PC2-P2-35
1PC2-P2-34
1PC2-P2-37
1PC2-P2-36
1PC2-P2-39
1PC2-P2-38
+5V BUS
+5V BUS
1PC2-P2-42
1PC2-P2-40
1PC2-P2-58
1PC2-P2-41
1PC1-P1-47
1PC2-P2-43
1PC2-P2-45
1PC2-P2-46
1PC2-P2-47
1PC2-P2-35
GND BUS
1PC2-P2-51
1PC2-P2-50
1PC2-P2-53
1PC2-P2-52
1PC2-P2-55
1PC2-P2-54
1PC2-P2-56
1PC2-P2-58
1PC2-P2-46
GND BUS
1PC2-P2-80,1PC3-P1-12
1PC3-P1-80
1PC2-P2-81
1PC3-P1-88
1PC2-P2-82
1PC1-P1-37
1PC2-P2-83
1PC3-P1-52
J3-1
J3-2
J3-3
J3-4
J3-5
J3-6
J3-7
J3-8
J3-9
J3-10
J3-11
J3-12
J3-13
J3-14
J3-15
J3-16
J3-17
J3-18
J3-19
J3-20
J3-21
J3-22
J3-23
J3-24
J3-25
J3-26
J3-27
J3-28
J3-29
J3-30
J3-31
J3-32
J3-33
J3-34
J3-35
J3-36
J3-37
J3-38
J3-39
J3-40
GND
GND
FRACTION SEL 1
FRACTION SEL 0
INTEGER SEL 3
INTEGER SEL 2
INTEGER SEL 1
INTEGER SEL 0
+5V
+5V
-GLPI LAMP
-APB SEL
START/STOP SW
B/B LPI SEL
-BELL
FRACTION SEL 2
-CONFIG TEST SEL
-BT LAMP
-SINGLE CYCLE
-TST PAT LAMP
GND
*DISPLAY SEL A1
*DISPLAY SEL A0
*DISPLAY BIT 1
*DISPLAY BIT 2
*DISPLAY BIT 3
*DISPLAY BIT 0
*DISPLAY BIT 4
*DISPLAY BIT 5
-DISPLAY WR
GND
-FAULT RESET
PHASE CONTROL
-SINGLE SPACE
PHASE CONTROL
-FORM FEED
-ALARM
-TEST PRINT
-INH
CONTROL PANEL
SPC1-P1
P1-1
P1-2
P1-3
P1-4
P1-5
P1-6
P1-7
P1-8
P1-9
P1-10
P1-11
P1-12
P1-13
P1-14
P1-15
P1-16
P1-17
P1-18
P1-20
P1-21
P1-22
P1-23
P1-24
P1-25
P1-26
P1-27
P1-28
P1-30
P1-31
P1-32
P1-33
P1-34
P1-35
P1-36
P1-37
P1-38
P1-39
P1-40
CROSS REF NO.0106
LOC.1BP1
360X BACKPLANE OFF BOARD CONNECTIONS
CODE IDENT
C
DWG NO
44682272
REV
A
1BP1
SHEET 23
CROSS REF NO 0106
EB.960X.44682272.R01.08

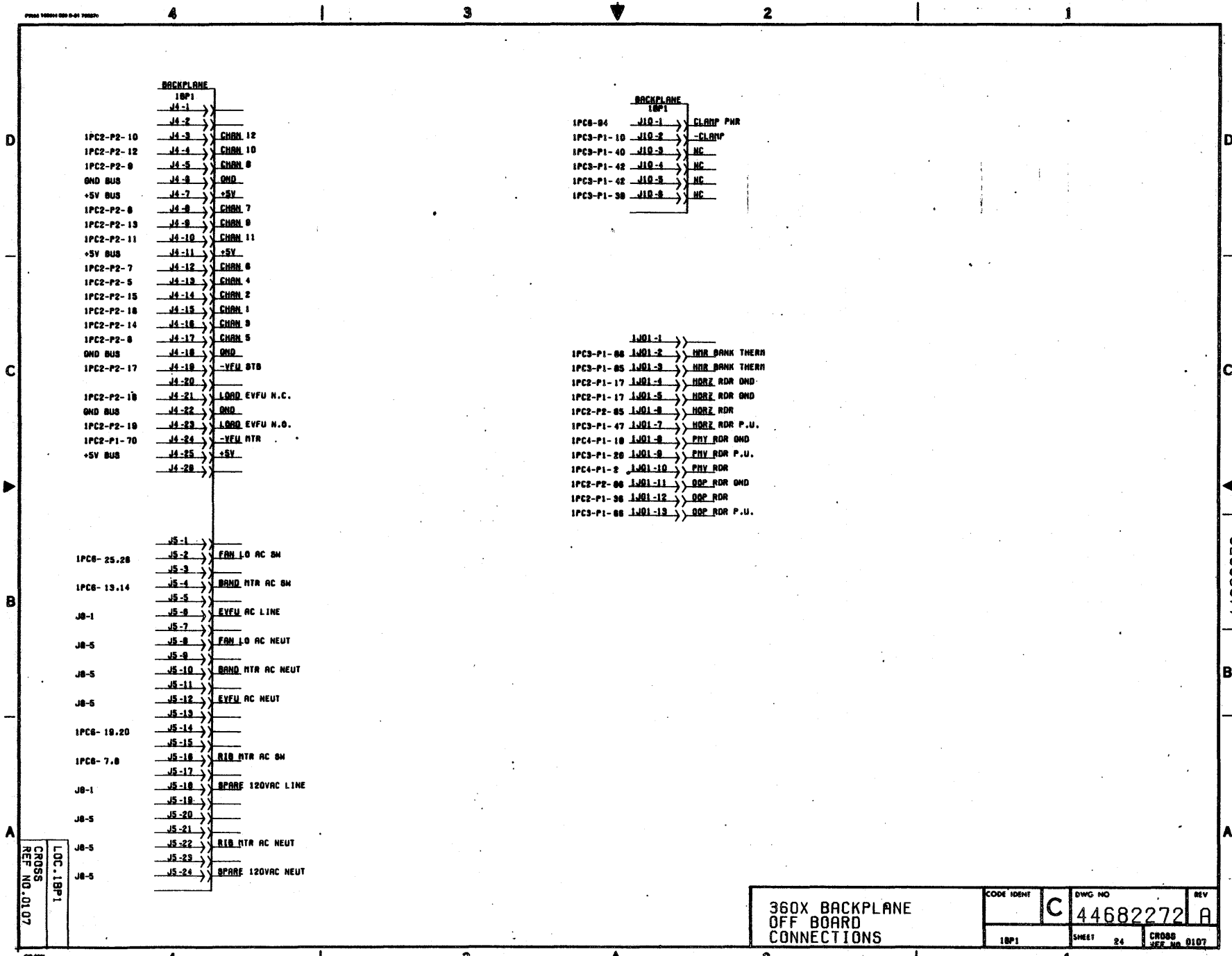

11-28

44682272

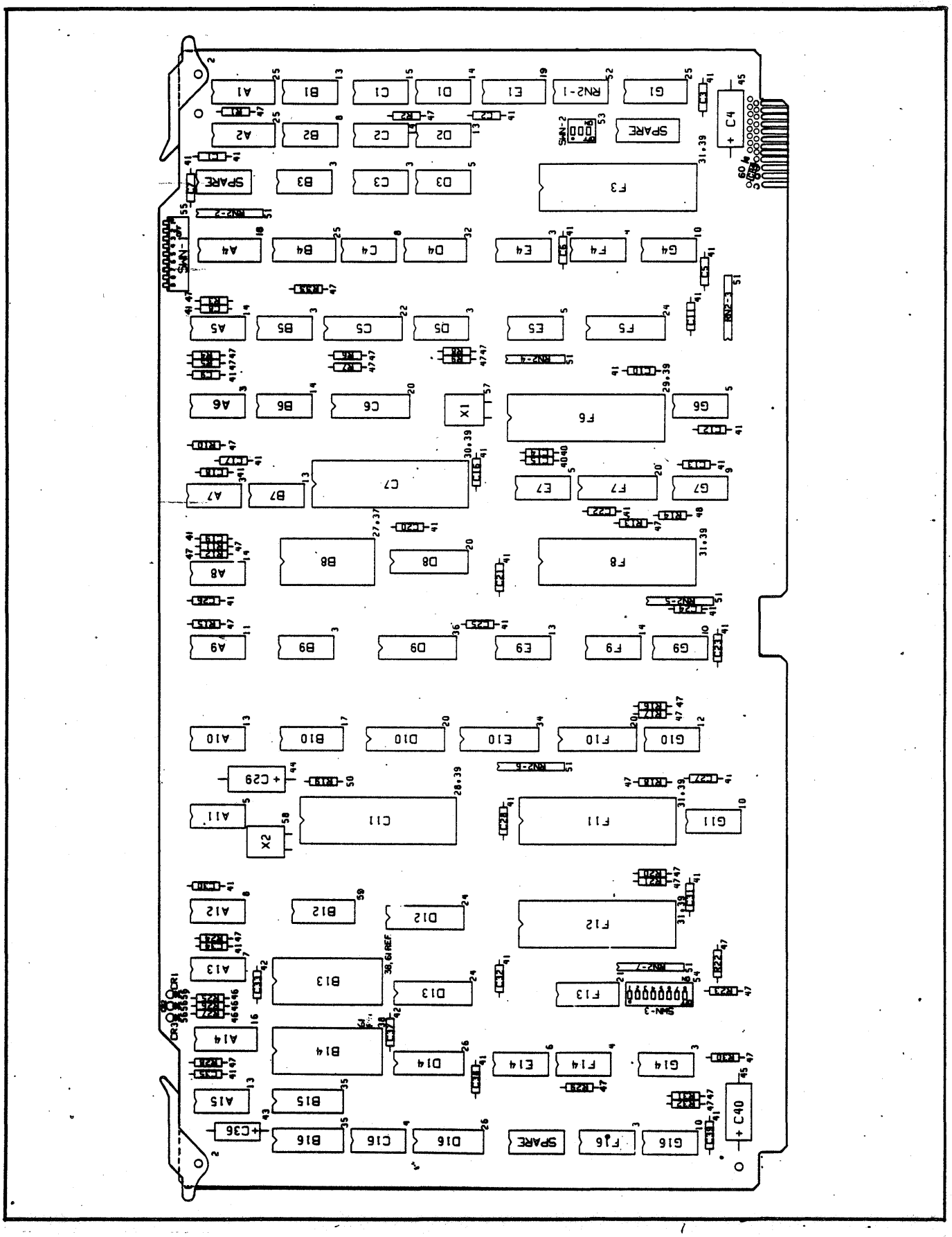

CPU ASSEMBLY PCB

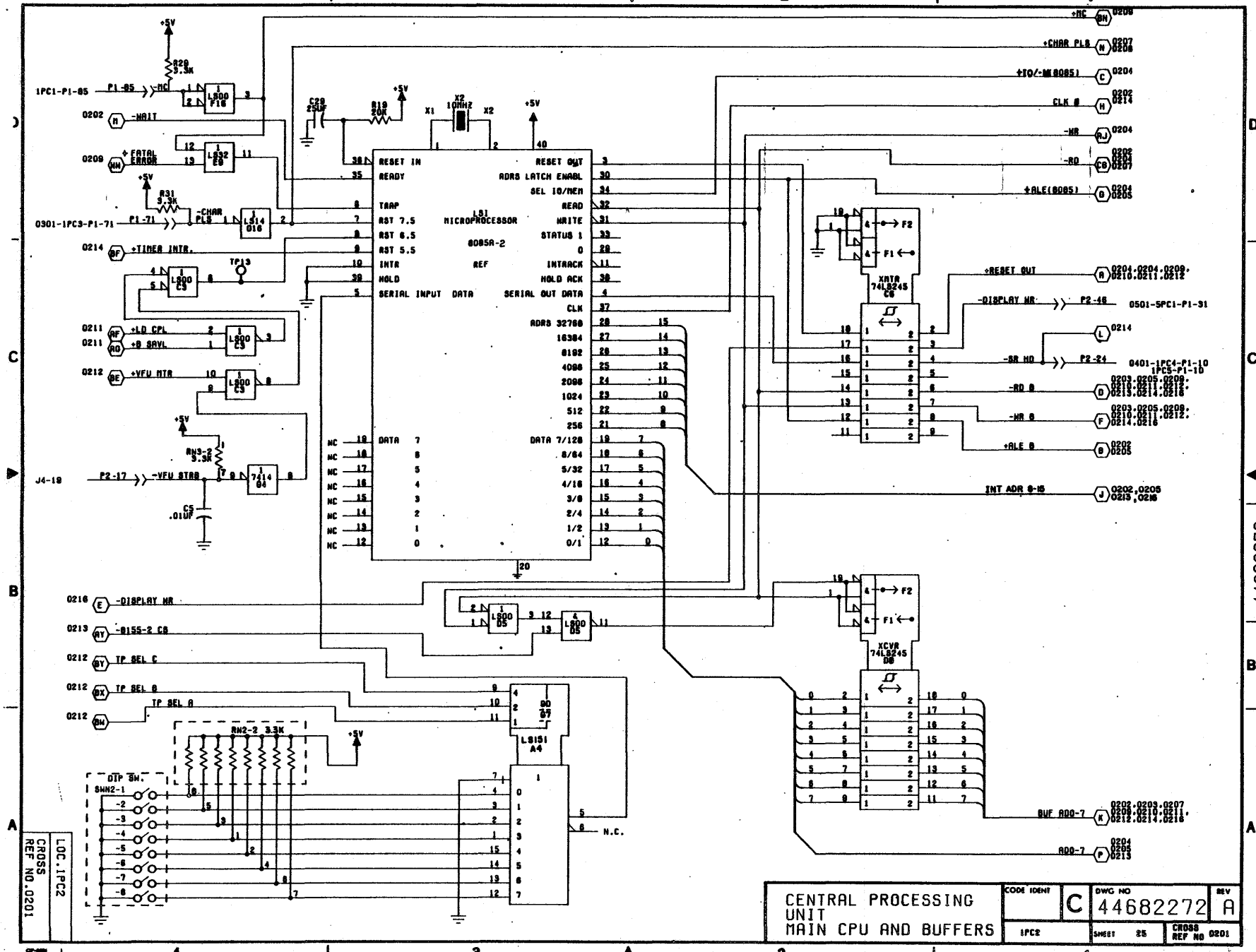

CENTRAL PROCESSING UNIT
MAIN CPU AND BUFFERS
CODE IDENT
C
DWG NO
44682272
REV
A
1PC2
SHEET 25
CROSS REF NO 0201
LOC.1PC2
CROSS REF NO.0201
LSI MICROPROCESSOR
8085A-2
REF
RESET IN
READY
TRAP
RST 7.5
RST 6.5
RST 5.5
INTR
HOLD
SERIAL INPUT DATA
RESET OUT
ADRS LATCH ENABL
SEL IO/MEM
READ
WRITE
STATUS 1
INTRACK
HOLD ACK
SERIAL OUT DATA
CLK
ADRS 32768
16384
8192
4096
2096
1024
512
256
DATA 7/128
8/64
5/32
4/16
3/8
2/4
1/2
0/1
DATA 7
NC
X1
X2
10MHZ
C29 25UF
R19 20K
+5V
R29 3.3K
R31 3.3K
R3-2 3.3K
C5 .01UF
1PC1-P1-85
P1-85
-MC
0202 -WAIT
0209 +FATAL ERROR
0301-1PC3-P1-71
P1-71
-CHAR PLS
0214 +TIMER INTR.
TP13
0211 +LD CPL
0211 +B SAVL
0212 +VFU MTR
J4-19
P2-17
-VFU STAB
0216 -DISPLAY WR
0213 -8155-2 CS
0212 TP SEL C
0212 TP SEL B
0212 TP SEL A
RN2-2 3.3K
DIP SW.
SWN2-1
LS151 A4
N.C.
XMTR 74LS245 C6
XCVR 74LS245 D8
F1
F2
+MC
+CHAR PLS
+IO/-MK(8085)
CLK B
-WR
-RD
+ALE(8085)
+RESET OUT
-DISPLAY WR
P2-46
0501-5PC1-P1-31
-SR HD
P2-24
0401-1PC4-P1-10
1PC5-P1-10
-RD B
-WR B
+ALE B
INT ADR 8-15
BUF AD0-7
AD0-7
44682272

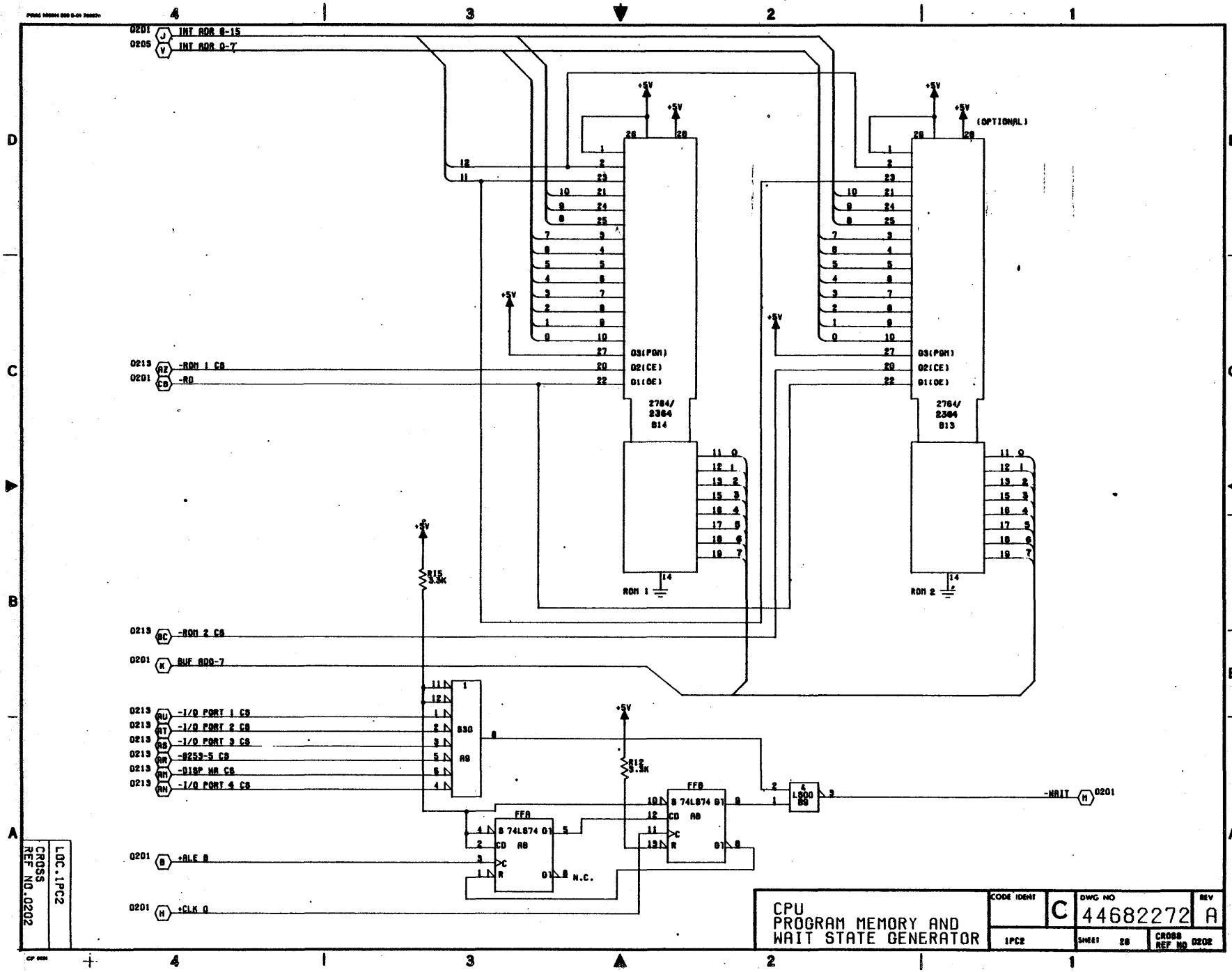

INT ADR 8-15
INT ADR 0-7
-ROM 1 CS
-RD
-ROM 2 CS
BUF ADD-7
-I/O PORT 1 CS
-I/O PORT 2 CS
-I/O PORT 3 CS
-8253-5 CS
-DISP WR CS
-I/O PORT 4 CS
+ALE B
+CLK 0
-WAIT
(OPTIONAL)
2764/
2364
B14
B13
ROM 1
ROM 2
FFA
FFB
S 74LS74
N.C.
LOC.1PC2
CROSS
REF NO.0202
CPU
PROGRAM MEMORY AND
WAIT STATE GENERATOR
CODE IDENT
C
DWG NO
44682272
REV
A
1PC2
SHEET 28
CROSS REF NO 0202

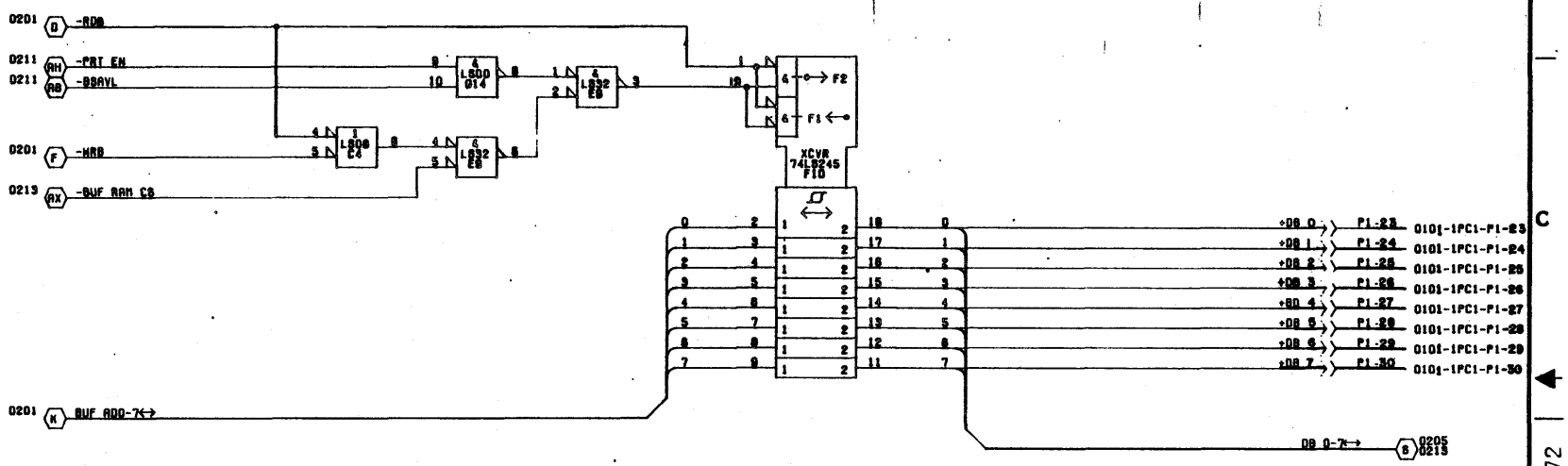

11-32

44682272

LOC.1PC2
CROSS REF NO.0203

CPU
DATA BUS BUFFER

CODE IDENT	DWG NO	REV
C	44682272	A

1PC2 | SHEET 27 | CROSS REF NO. 0203

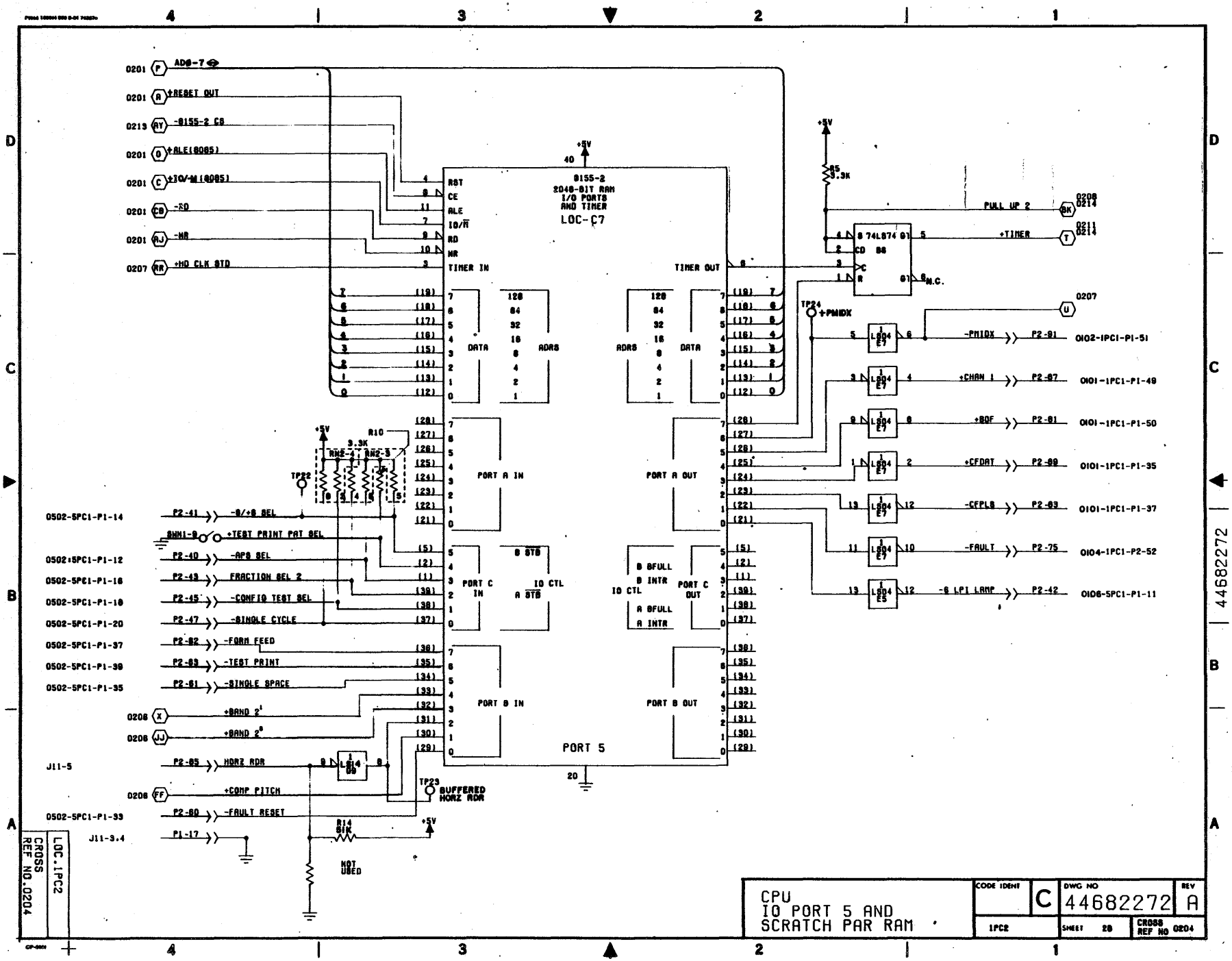

11-33

44682272

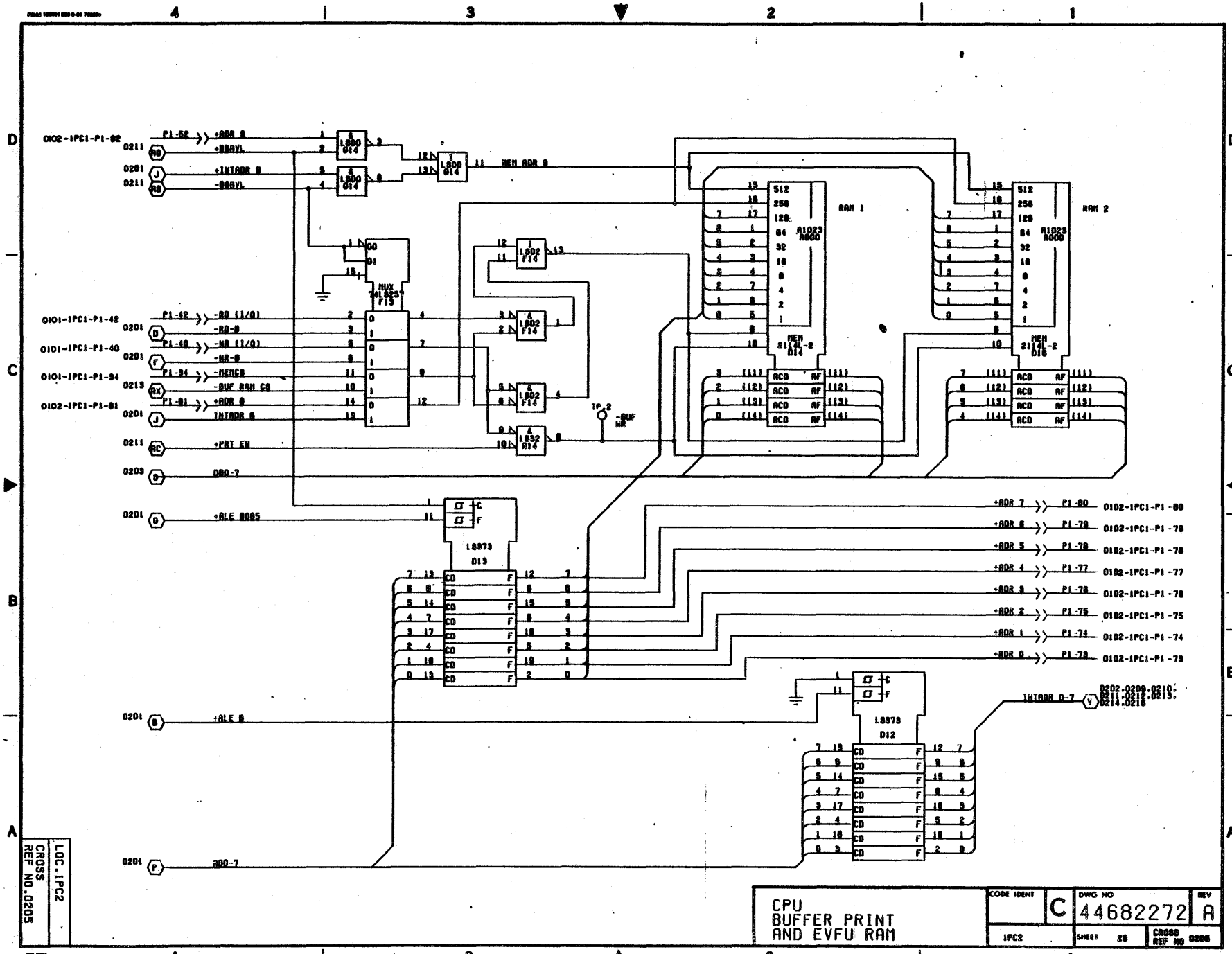
0102-1PC1-P1-82
P1-52
+ADR 8
+BBAVL
0201
0211
+INTADR 8
-BBAVL
MEM ADR 8
0101-1PC1-P1-42
P1-42
-RD (I/O)
-RD-8
0101-1PC1-P1-40
P1-40
-WR (I/O)
-WR-8
0101-1PC1-P1-34
P1-34
-MEMCS
0213
-BUF RAM CS
0102-1PC1-P1-81
P1-81
+ADR 8
INTADR 8
0211
+PRT EN
0203
DB0-7
0201
+ALE BOBS
LS373
D13
+ADR 7
+ADR 6
+ADR 5
+ADR 4
+ADR 3
+ADR 2
+ADR 1
+ADR 0
P1-80
P1-79
P1-78
P1-77
P1-76
P1-75
P1-74
P1-73
0102-1PC1-P1 -80
0102-1PC1-P1 -79
0102-1PC1-P1 -78
0102-1PC1-P1 -77
0102-1PC1-P1 -76
0102-1PC1-P1 -75
0102-1PC1-P1 -74
0102-1PC1-P1 -73
RAM 1
RAM 2
A1023 A000
MEM 2114-2
D14
D15
D16
MUX 74LS257
F13
TP 2
-BUF MR
+ALE 8
LS373
D12
INTADR 0-7
0202:0209:0210:
0211:0212:0213:
0214:0216
ADD-7
LOC.1PC2
CROSS REF NO.0205
CPU
BUFFER PRINT
AND EVFU RAM
CODE IDENT
C
DWG NO
44682272
REV
A
1PC2
SHEET 28
CROSS REF NO 0205

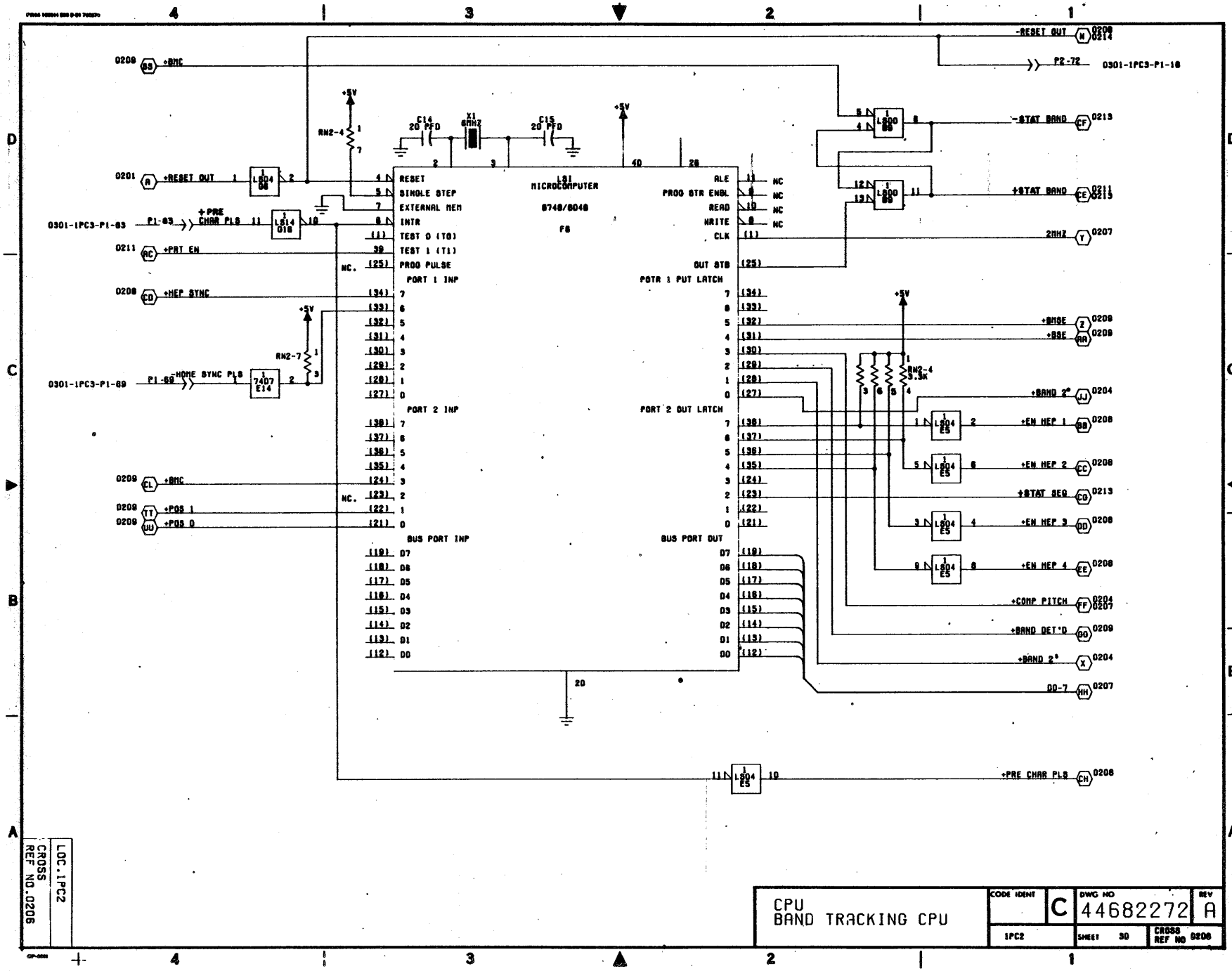
LSI
MICROCOMPUTER
8748/8048
F8
RESET
SINGLE STEP
EXTERNAL MEM
INTR
TEST 0 (T0)
TEST 1 (T1)
PROG PULSE
PORT 1 INP
PORT 2 INP
BUS PORT INP
ALE
PROG STR ENBL
READ
WRITE
CLK
OUT STB
PORT 1 PUT LATCH
PORT 2 OUT LATCH
BUS PORT OUT
NC.
+5V
RN2-4
RN2-7
RN2-4 3.3K
C14 20 PFD
X1 6MHZ
C15 20 PFD
+BMC
+RESET OUT
+PRE CHAR PLS
+PRT EN
+HEP SYNC
-HOME SYNC PLS
+POS 1
+POS 0
-RESET OUT
P2-72
0301-1PC3-P1-18
-STAT BAND
+STAT BAND
2MHZ
+BMSE
+BSE
+BAND 2°
+EN HEP 1
+EN HEP 2
+STAT SEQ
+EN HEP 3
+EN HEP 4
+COMP PITCH
+BAND DET'D
+BAND 2°
D0-7
+PRE CHAR PLS
LOC.1PC2
CROSS REF NO.0206
CPU
BAND TRACKING CPU
CODE IDENT
C
DWG NO
44682272
REV
A
1PC2
SHEET 30
CROSS REF NO 0206
44682272

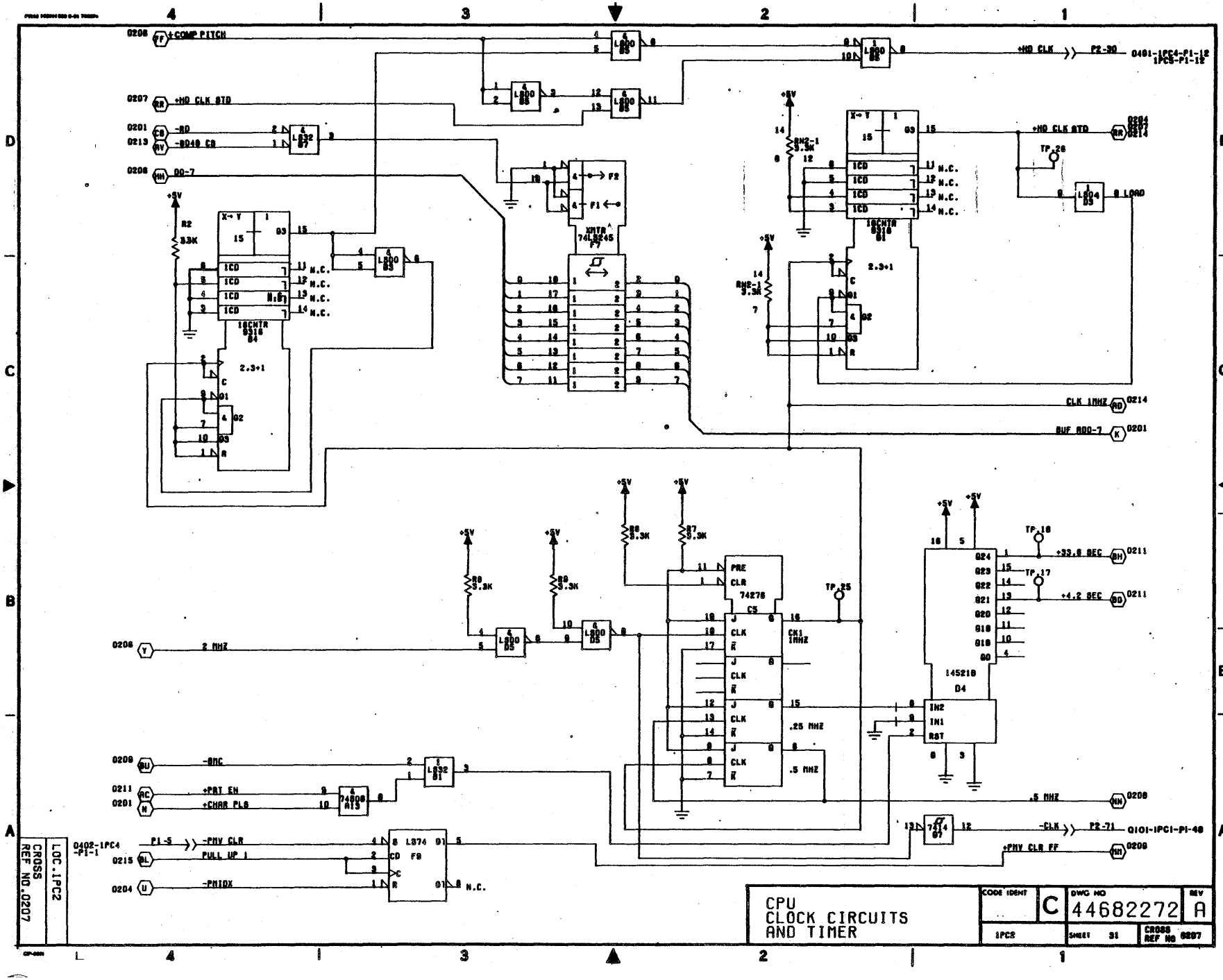
+COMP PITCH
+HD CLK
+HD CLK STD
-RD
-RD40 EB
DO-7
2 MHZ
-BNC
+PRT EN
+CHAR PLS
-PHV CLR
PULL UP 1
-PHIDX
CLK 1MHZ
BUF RDO-7
+35.8 SEC
+4.2 SEC
.25 MHZ
.5 MHZ
-CLK
+PHV CLR FF
CPU
CLOCK CIRCUITS
AND TIMER
CODE IDENT
C
DWG NO
44682272
REV
A
IPC2
SHEET 31
CROSS REF NO 0207
CROSS REF NO.0207
LOC.IPC2

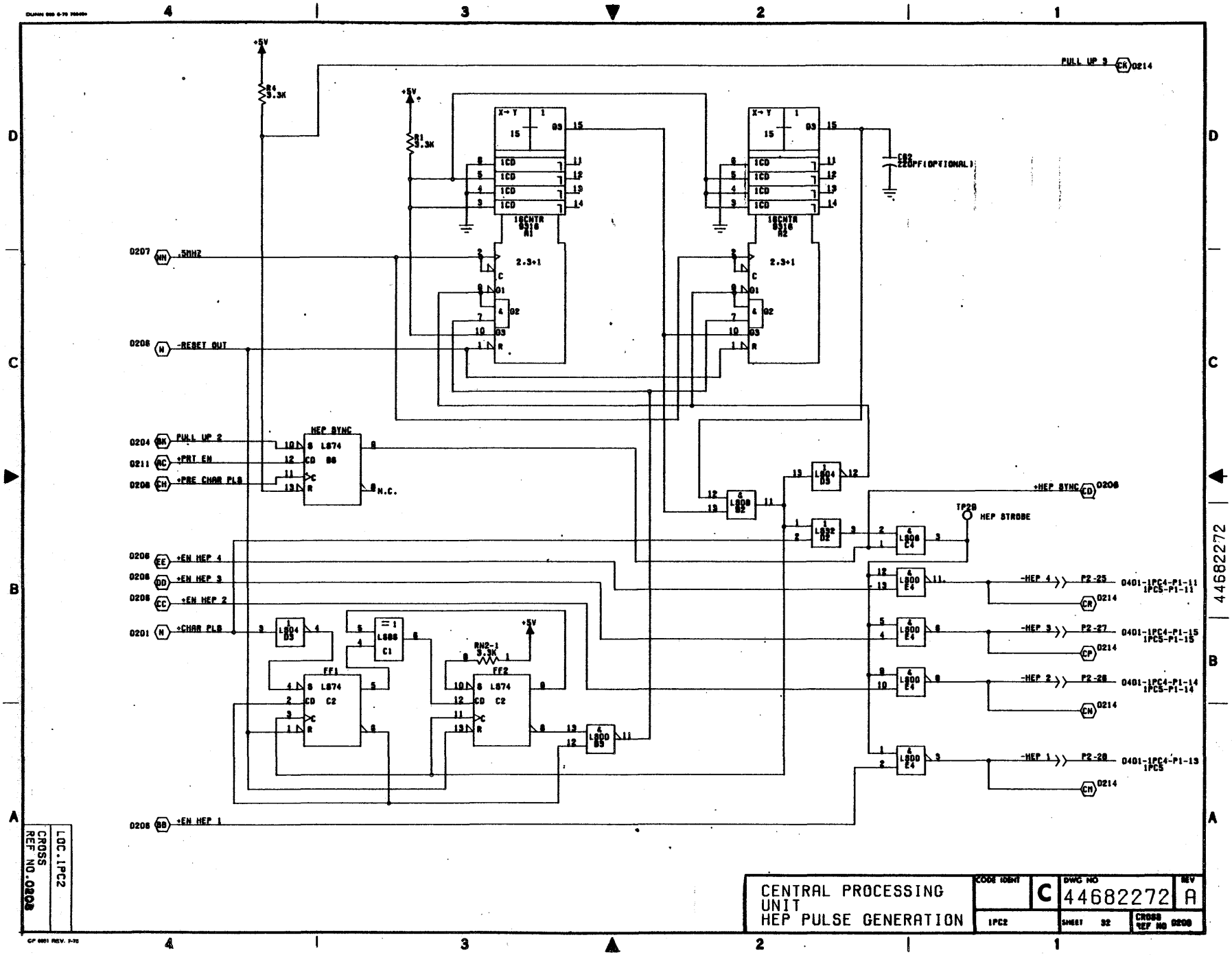

PULL UP 3
0214
+5V
R4 3.3K
R1 3.3K
X→Y
15
Q3
1CD
16CNTR 9316 A1
16CNTR 9316 A2
2.3+1
C82 220PF(OPTIONAL)
0207 .5MHZ
0206 -RESET OUT
0204 PULL UP 2
0211 +PRT EN
0208 +PRE CHAR PLS
HEP SYNC
LS74 B6
N.C.
+HEP SYNC 0206
TP28 HEP STROBE
0206 +EN HEP 4
0206 +EN HEP 3
0206 +EN HEP 2
0201 +CHAR PLS
LS04 D3
LS86 C1
RN2-1 3.3K
FF1 LS74 C2
FF2 LS74 C2
LS00 B3
LS00 E4
LS32 D2
LS08 B2
LS04 D3
LS08 C4
-HEP 4 P2-25 0401-1PC4-P1-11 1PC5-P1-11
-HEP 3 P2-27 0401-1PC4-P1-15 1PC5-P1-15
-HEP 2 P2-26 0401-1PC4-P1-14 1PC5-P1-14
-HEP 1 P2-28 0401-1PC4-P1-13 1PC5
0206 +EN HEP 1
LOC.1PC2
CROSS REF NO.0208
CENTRAL PROCESSING UNIT
HEP PULSE GENERATION
CODE IDENT
C
DWG NO 44682272
REV A
1PC2
SHEET 32
CROSS REF NO 0208
44682272

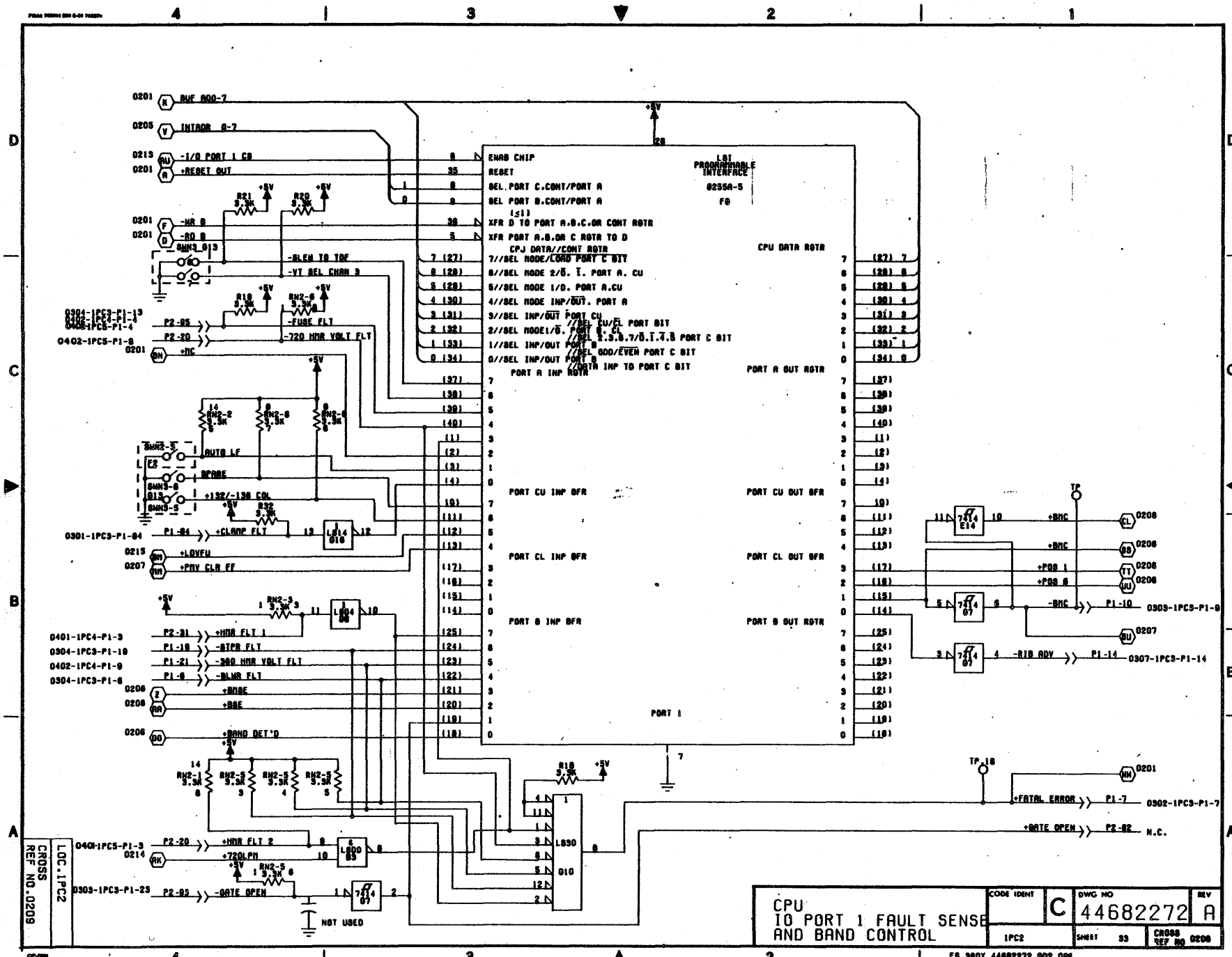
CPU
IO PORT 1 FAULT SENSE
AND BAND CONTROL
CODE IDENT C
DWG NO 44682272
REV A
1PC2
SHEET 33
CROSS REF NO 0209
LOC.1PC2
CROSS REF NO.0209
E8.380X.44682272.R02.096
11-38
44682272
LSI PROGRAMMABLE INTERFACE 82358-5 F8
CPU DATA RGTR
PORT A OUT RGTR
PORT CU OUT BFR
PORT CL OUT BFR
PORT B OUT RGTR
PORT A INP RGTR
PORT CU INP BFR
PORT CL INP BFR
PORT B INP BFR
PORT 1
ENAB CHIP
RESET
SEL PORT C.CONT/PORT A
SEL PORT B.CONT/PORT A
XFR D TO PORT A.B.C.CR CONT RGTR
XFR PORT A.B.CR C RGTR TO D
CPJ DATA/CONT RGTR
7//SEL MODE/LOAD PORT C BIT
6//SEL MODE 2/5. T. PORT A. CU
5//SEL MODE 1/D. PORT A.CU
4//SEL MODE INP/OUT. PORT A
3//SEL INP/OUT PORT CU
2//SEL MODE1/5. PORT B. CL
1//SEL INP/OUT PORT B
0//SEL INP/OUT PORT B
//SEL CU/CL PORT BIT
//SEL 2.3.6.7/6.1.4.5 PORT C BIT
//SEL ODD/EVEN PORT C BIT
//PORTA INP TO PORT C BIT
-1/0 PORT 1 CS
+RESET OUT
-HR 0
-RD 0
SWN3 0/3
-ALEN TO TDF
-VT SEL CHAN 3
-FUSE FLT
-720 HRR VOLT FLT
+MC
+CLAMP FLT
+LOVFU
+MV CLR FF
AUTO LF
SPARE
+132/-136 COL
+HRR FLT 1
-BTPR FLT
-360 HRR VOLT FLT
-BLWR FLT
+BASE
+BASE
+BAND DET'D
+HRR FLT 2
+720LPN
-GATE OPEN
NOT USED
+BMC
+BMC
+POS 1
+POS 0
-BMC
-RIB ADV
+FATAL ERROR
+GATE OPEN
N.C.
AVF A00-7
INTADR 0-7
-MC
+5V
R21 3.3K
R20 3.3K
R19 3.3K
RN2-6 3.3K
RN2-2 3.3K
RN2-8 3.3K
RN2-4 3.3K
R32 3.3K
RN2-3 3.3K
RN2-1 3.3K
RN2-5 3.3K
RN2-7 3.3K
R18 3.3K
L890 010
L804 08
L814 010
L890 05
7414 E14
7414 07
7414 07
7414 07
TP
TP.18

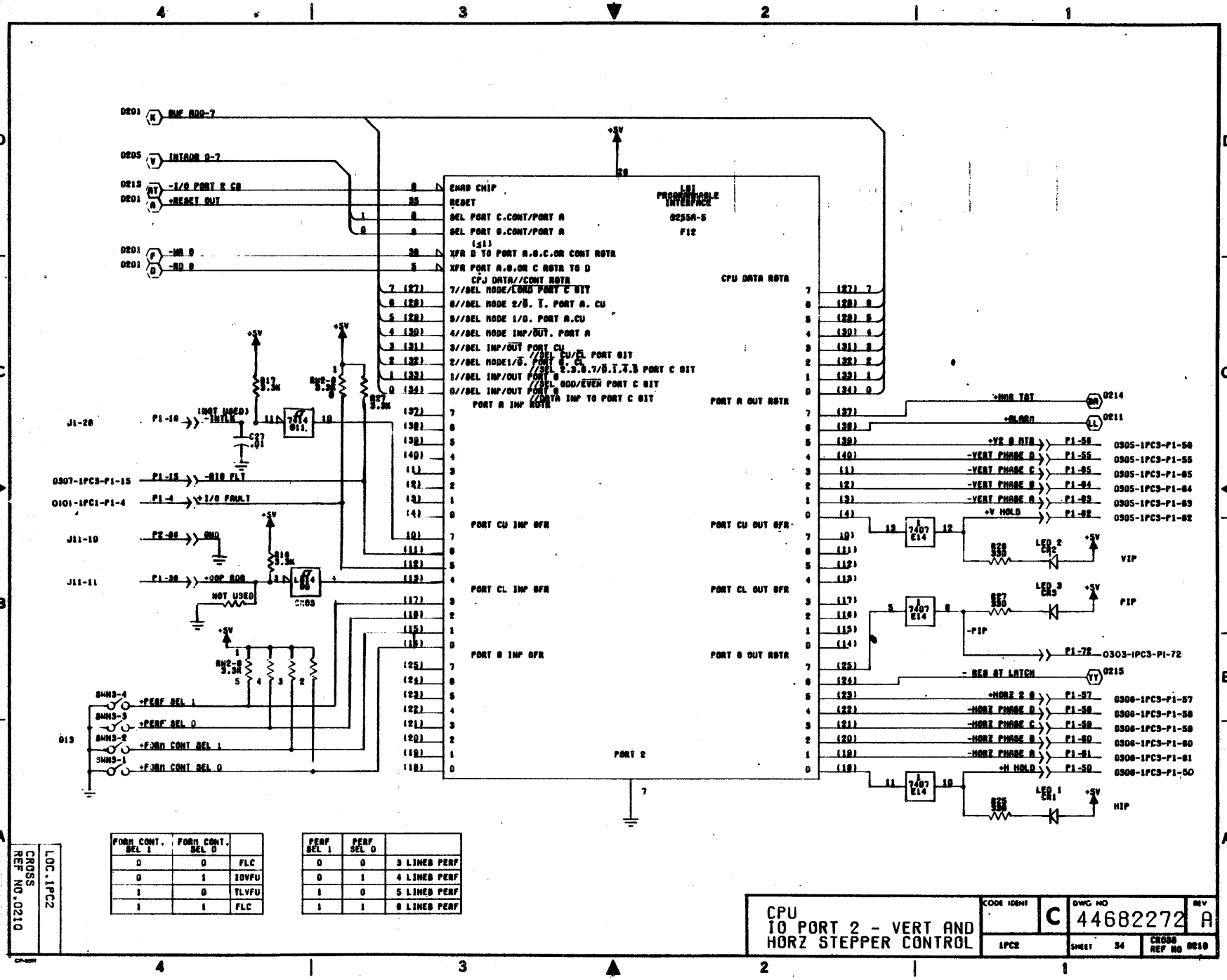

FORM CONT. SEL 1	FORM CONT. SEL 0	
0	0	FLC
0	1	IOVFU
1	0	TLVFU
1	1	FLC

PERF SEL 1	PERF SEL 0	
0	0	3 LINES PERF
0	1	4 LINES PERF
1	0	5 LINES PERF
1	1	6 LINES PERF

CROSS REF NO.0210

LOC.1PC2

CPU
IO PORT 2 - VERT AND HORZ STEPPER CONTROL

CODE IDENT	DWG NO	REV
C	44682272	A
1PC2	SHEET 34	CROSS REF NO 0210

44682272

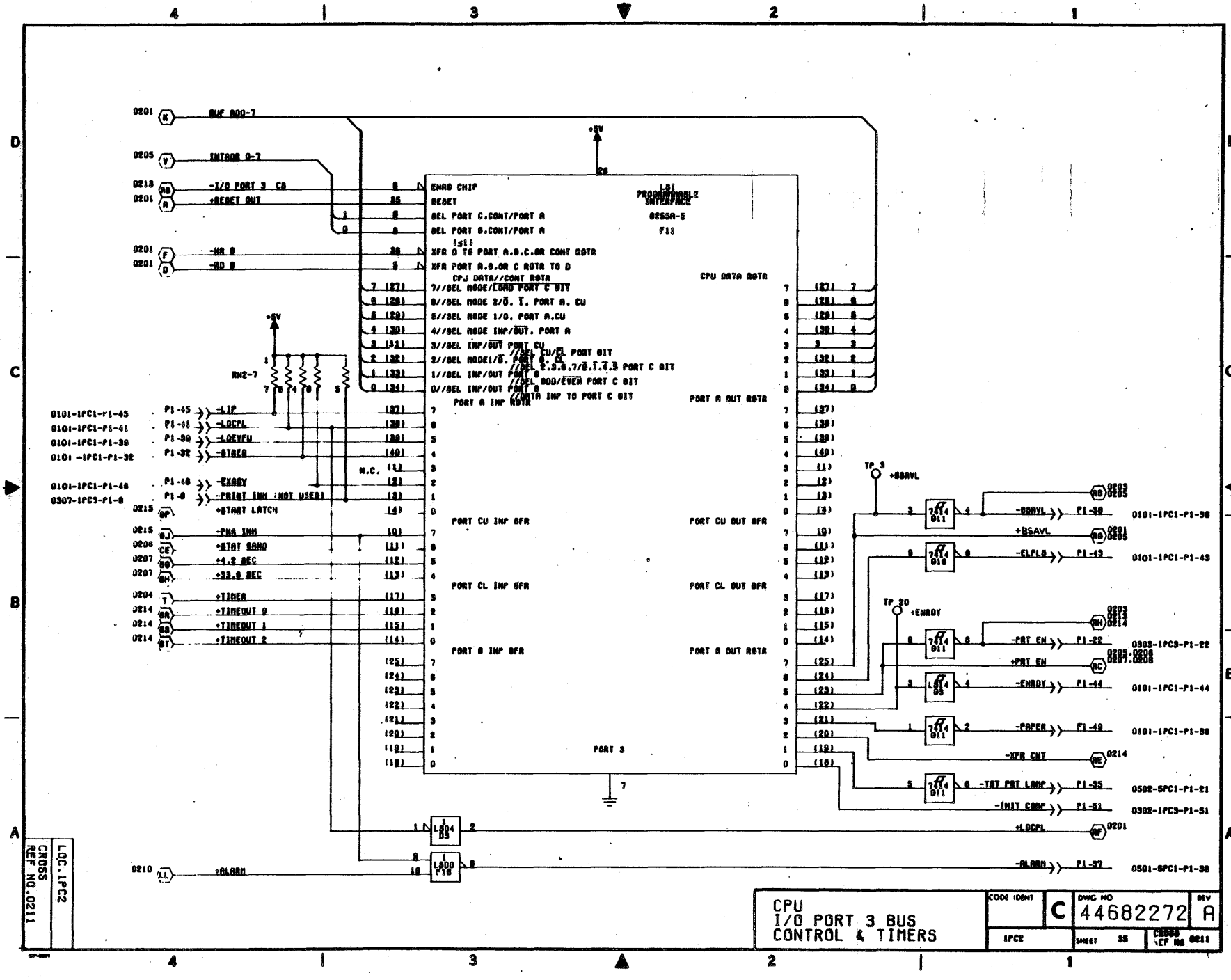
0201 BUF ADD-7
0205 INTADR 0-7
0213 -I/O PORT 3 CS
0201 +RESET OUT
0201 -WR S
0201 -RD S
+5V
RN2-7
0101-1PC1-P1-45 P1-45 -LIP
0101-1PC1-P1-41 P1-41 -LOCPL
0101-1PC1-P1-39 P1-39 -LDEVFW
0101 -1PC1-P1-32 P1-32 -STAEA
0101-1PC1-P1-46 P1-46 -ENRDY
0307-1PC3-P1-8 P1-8 -PRINT INH (NOT USED)
0215 +START LATCH
0215 -PWR INH
0208 +STAT RAMD
0207 +4.2 AEC
0207 +33.0 AEC
0204 +TIMER
0214 +TIMEOUT 0
0214 +TIMEOUT 1
0214 +TIMEOUT 2
0210 +ALARM
ENAB CHIP
RESET
SEL PORT C.CONT/PORT A
SEL PORT B.CONT/PORT A
XFR D TO PORT A.B.C.OR CONT RGTR
XFR PORT A.B.OR C RGTR TO D
CPU DATA//CONT RGTR
7//SEL MODE/LOAD PORT C BIT
6//SEL MODE 2/B. I. PORT A. CU
5//SEL MODE 1/O. PORT A.CU
4//SEL MODE INP/OUT. PORT A
3//SEL INP/OUT PORT CU
2//SEL MODE1/B. PORT B. CL
1//SEL INP/OUT PORT B
0//SEL INP/OUT PORT B
PORT A INP RGTR
PORT CU INP BFR
PORT CL INP BFR
PORT B INP BFR
PORT 3
LOI PROGRAMMABLE PERIPHERAL INTERFACE 8255A-5 F18
CPU DATA RGTR
PORT A OUT RGTR
PORT CU OUT BFR
PORT CL OUT BFR
PORT B OUT RGTR
//SEL CU/CL PORT BIT
//SEL 2.3.6.7/B.I.T.S PORT C BIT
//SEL ODD/EVEN PORT C BIT
//DATA INP TO PORT C BIT
N.C.
TP 9 +BSAVL
TP 20 +ENRDY
-BSAVL P1-38 0101-1PC1-P1-38
+BSAVL 0201 0205
-ELPLS P1-43 0101-1PC1-P1-43
-PRT EN P1-22 0303-1PC3-P1-22
+PRT EN 0205 0206 0207 0208
-ENRDY P1-44 0101-1PC1-P1-44
-PAPER P1-48 0101-1PC1-P1-36
-XFR CNT 0214
-TST PRT LAMP P1-35 0502-SPC1-P1-21
-INIT COMP P1-51 0302-1PC3-P1-51
+LOCPL 0201
-ALARM P1-37 0501-SPC1-P1-38
CROSS REF NO.0211
LOC.1PC2
CPU
I/O PORT 3 BUS
CONTROL & TIMERS
CODE IDENT C
DWG NO 44682272
REV A
1PC2
SHEET 35
CROSS REF NO 0211

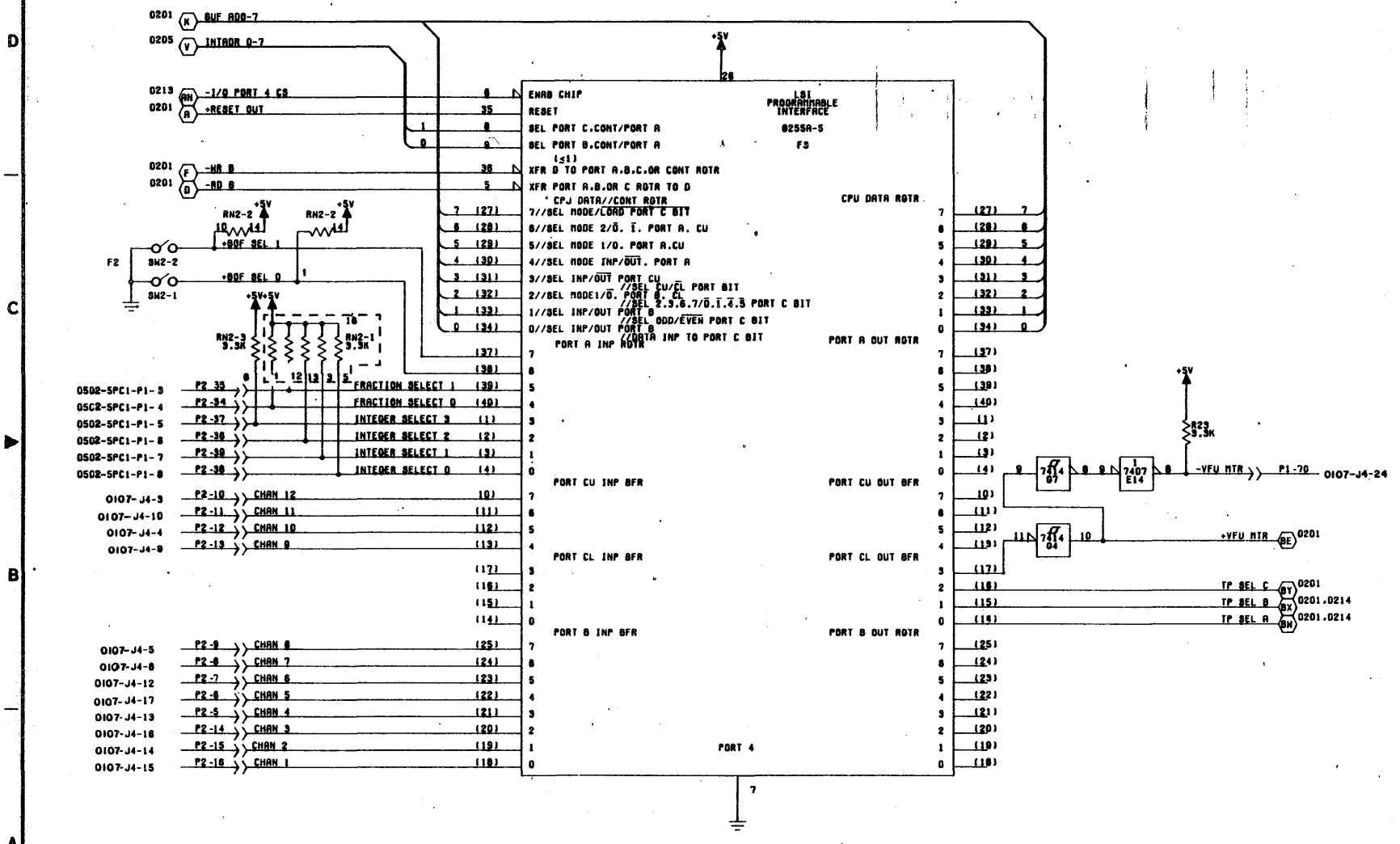

	BOF SEL 1	BOF SEL 0
CHAN 2	0	0
CHAN 8	0	1
CHAN 12	1	0
NO BOF	1	1

CROSS REF NO.0212

LOC.1PC2

CPU
(I/O PORT 4
EVFU CONTROL)

CODE IDENT	DWG NO	REV
C	44682272	A
1PC2	SHEET 38	CROSS REF NO 0212

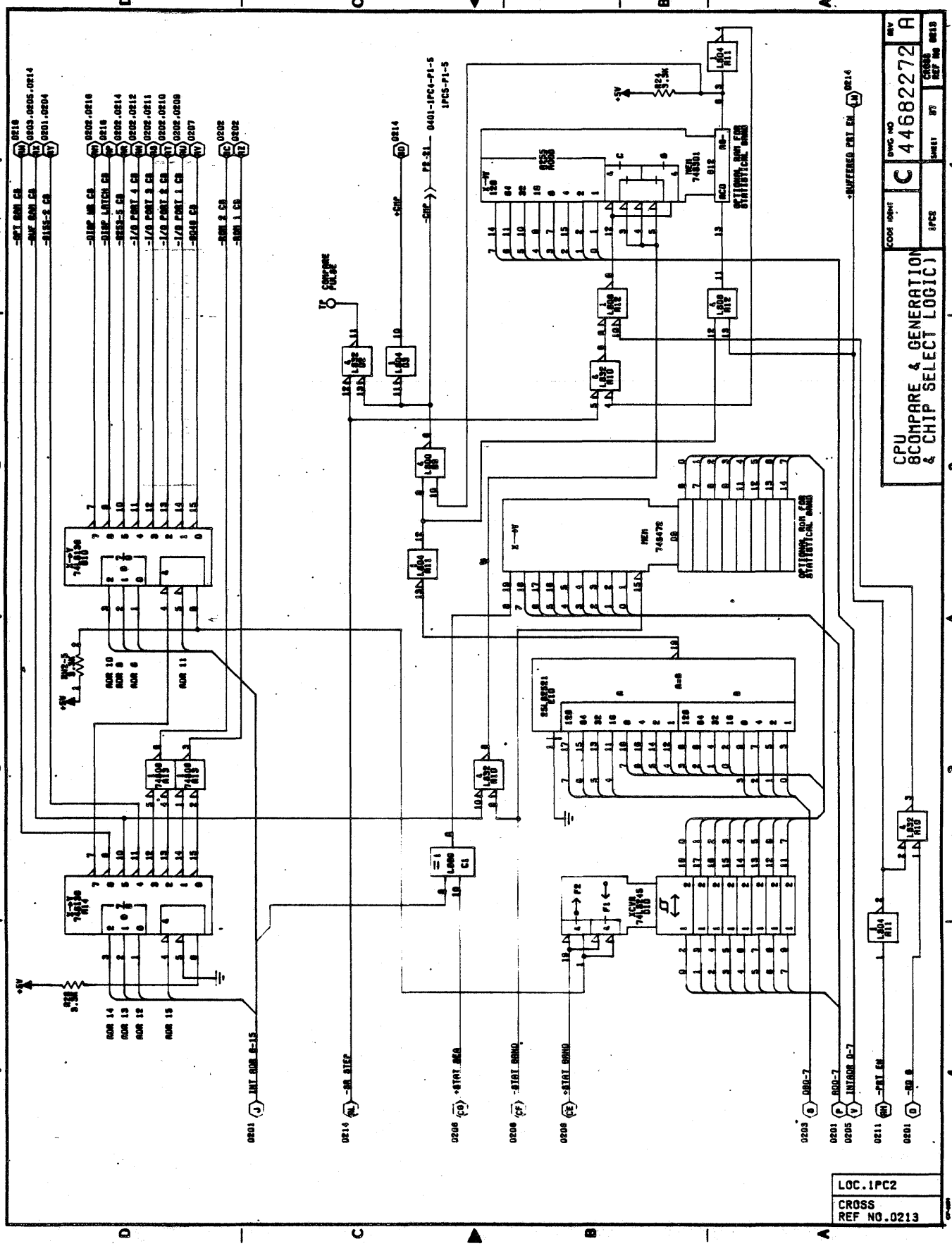
CPU
8COMPARE & GENERATION
& CHIP SELECT LOGIC)
C
44682272
A
LOC.1PC2
CROSS
REF NO.0213

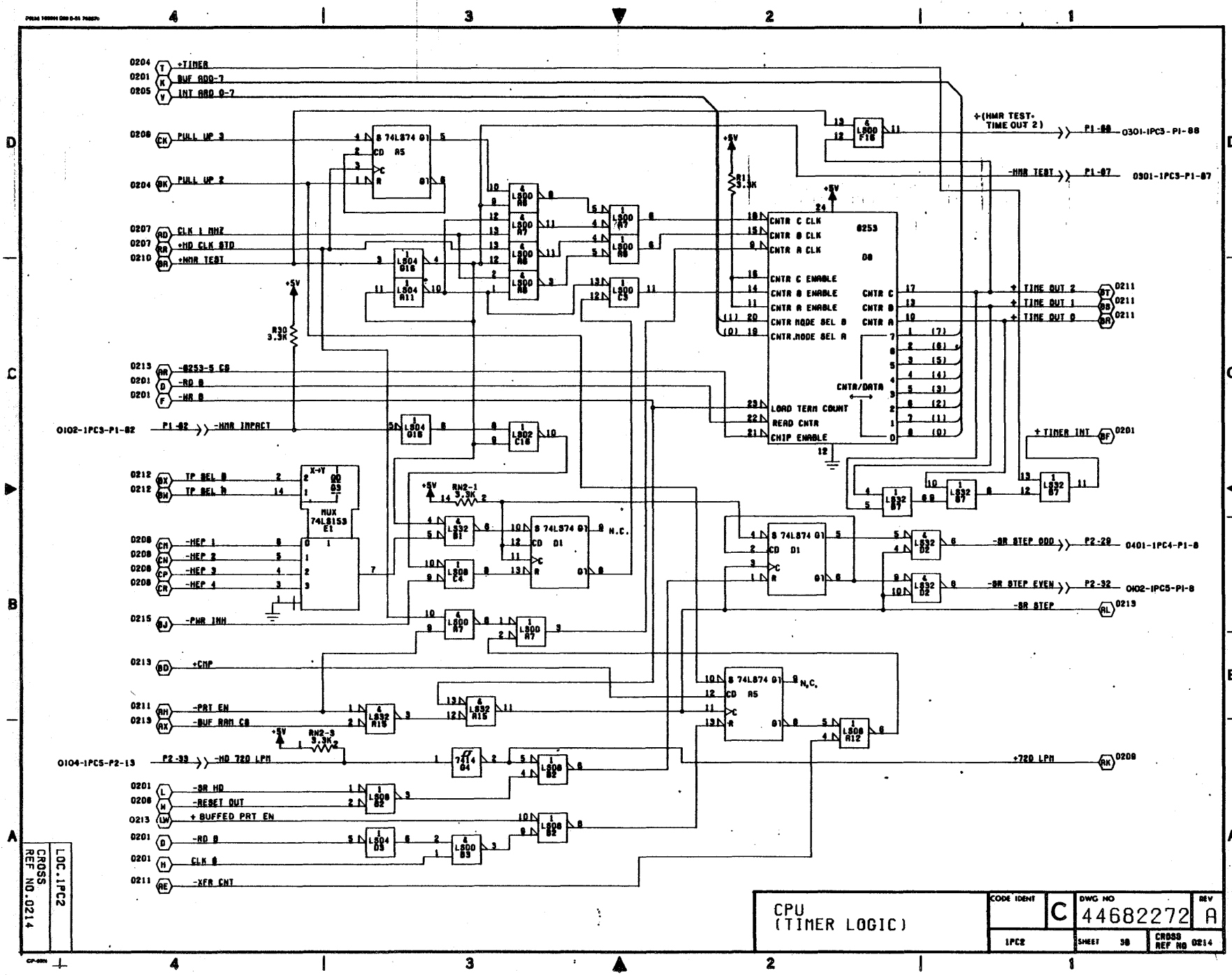

+TIMER
BUF ADD-7
INT ADD 0-7
PULL UP 3
PULL UP 2
CLK 1 MHZ
+HD CLK STD
+HMR TEST
-8253-5 CS
-RD B
-WR B
-HMR IMPACT
TP SEL B
TP SEL A
-HEP 1
-HEP 2
-HEP 3
-HEP 4
-PWR INH
+CMP
-PRT EN
-BUF RAM CS
-HD 720 LPM
-SR HD
-RESET OUT
+ BUFFED PRT EN
-RD B
CLK B
-XFR CNT
+(HMR TEST- TIME OUT 2)
-HMR TEST
+ TIME OUT 2
+ TIME OUT 1
+ TIME OUT 0
+ TIMER INT
-SR STEP ODD
-SR STEP EVEN
-SR STEP
+720 LPM
CNTR C CLK
CNTR B CLK
CNTR A CLK
CNTR C ENABLE
CNTR B ENABLE
CNTR A ENABLE
CNTR MODE SEL B
CNTR MODE SEL A
LOAD TERM COUNT
READ CNTR
CHIP ENABLE
CNTR/DATA
8253
MUX 74LS153
LOC.1PC2
CROSS REF NO.0214
CPU (TIMER LOGIC)
CODE IDENT
C
DWG NO
44682272
REV
A
1PC2
SHEET 38
CROSS REF NO 0214

44682272

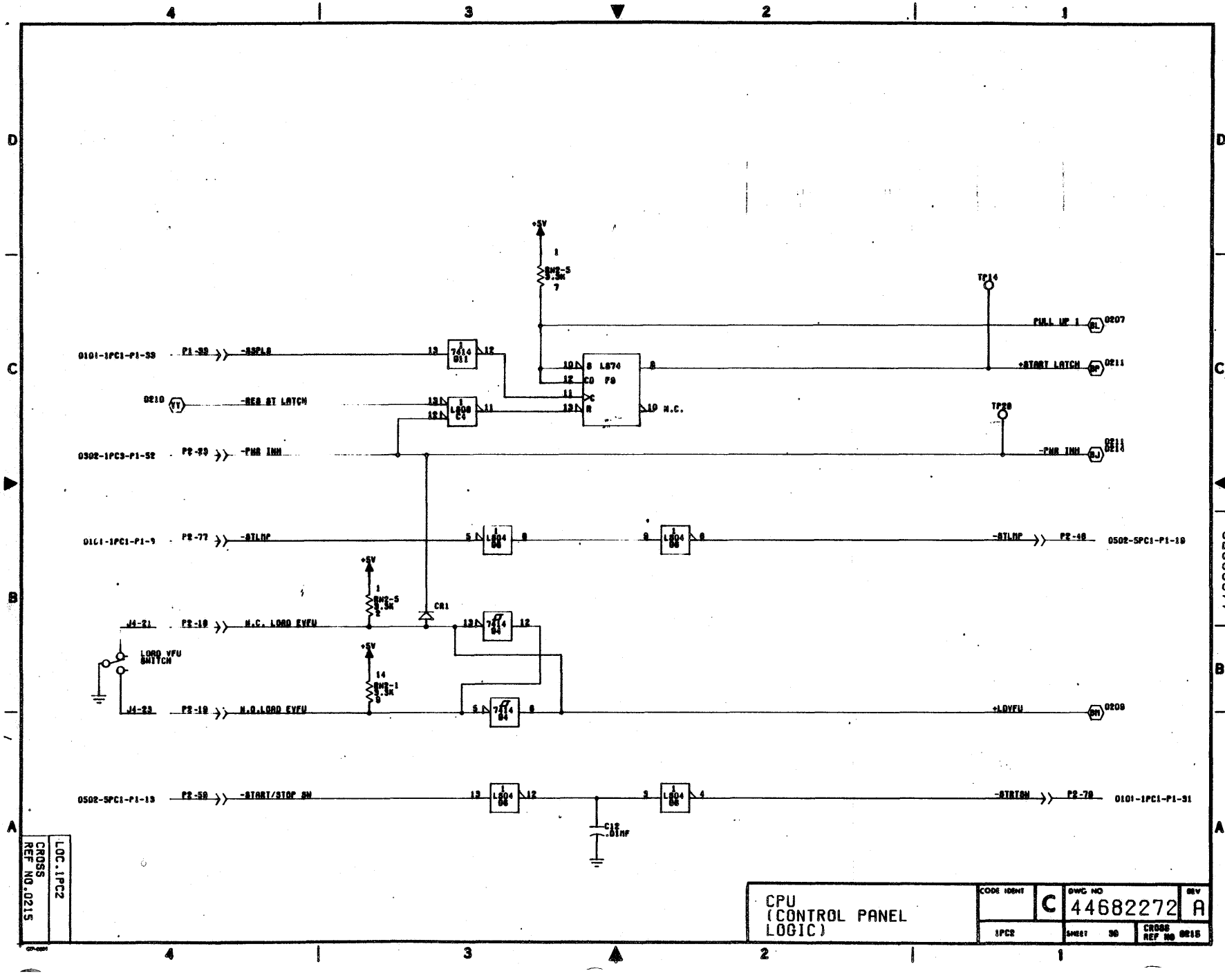

0101-1PC1-P1-33
P1-33
-SSPLS
0210
-RES ST LATCH
0302-1PC3-P1-52
P2-23
-PWR INH
0101-1PC1-P1-9
P2-77
-STLMP
J4-21
P2-18
N.C. LOAD EVFU
LOAD VFU SWITCH
J4-23
P2-19
N.O.LOAD EVFU
0502-5PC1-P1-13
P2-59
-START/STOP SW
+5V
RN2-5 3.3K
RN2-1 3.3K
CR1
C12 .01MF
LS74 F9
N.C.
TP14
TP28
PULL UP 1
0207
+START LATCH
0211
-PWR INH
0211 0214
-STLMP
P2-48
0502-5PC1-P1-19
+LDVFU
0209
-STRTSW
P2-79
0101-1PC1-P1-31
LOC.1PC2
CROSS REF NO.0215
CPU (CONTROL PANEL LOGIC)
CODE IDENT
C
DWG NO
44682272
REV
A
1PC2
SHEET 30
CROSS REF NO 0215
44682272

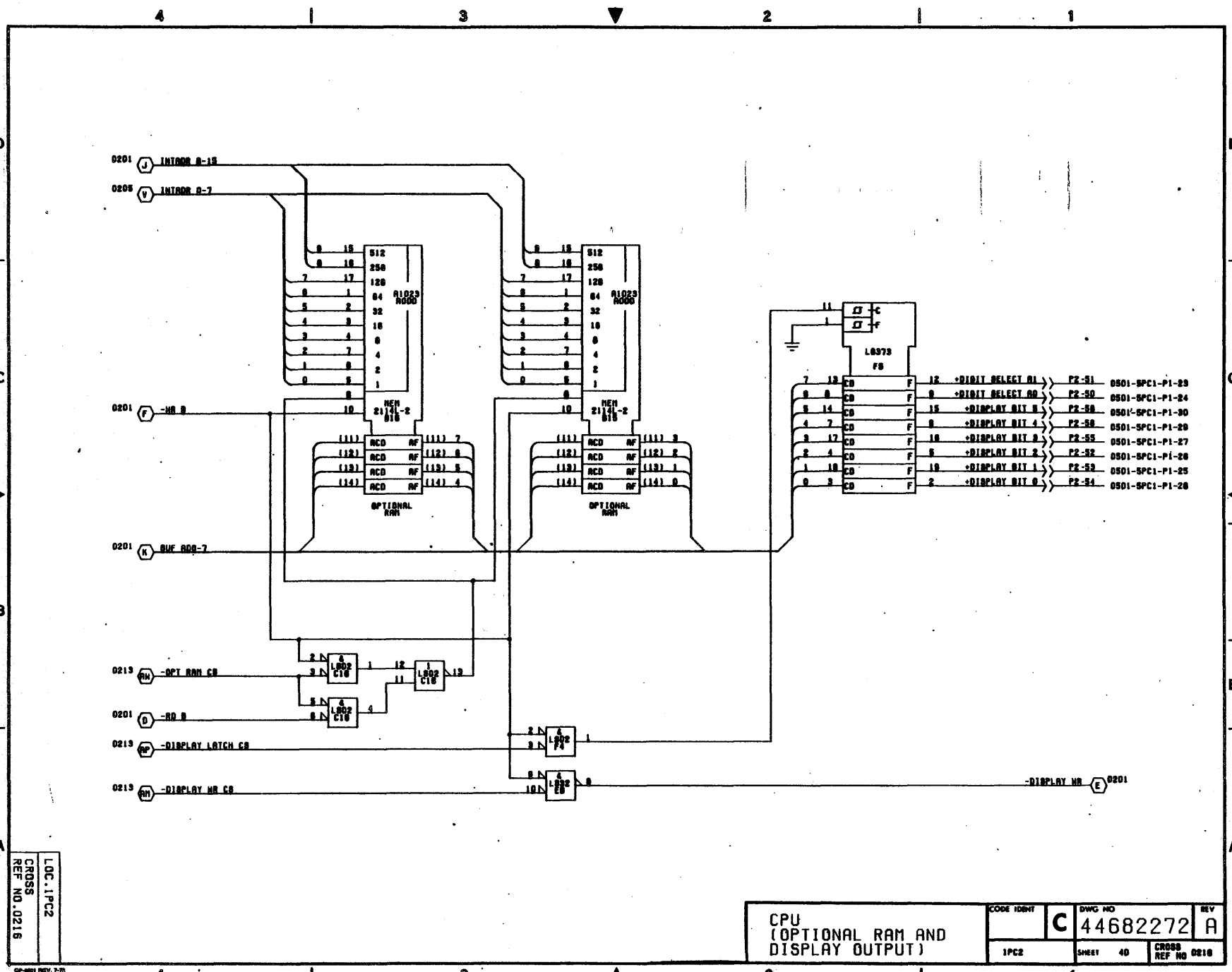

CPU
(OPTIONAL RAM AND
DISPLAY OUTPUT)

CODE IDENT	DWG NO	REV
C	44682272	A
1PC2	SHEET 40	CROSS REF NO 0216

11-45/11-46

44682272

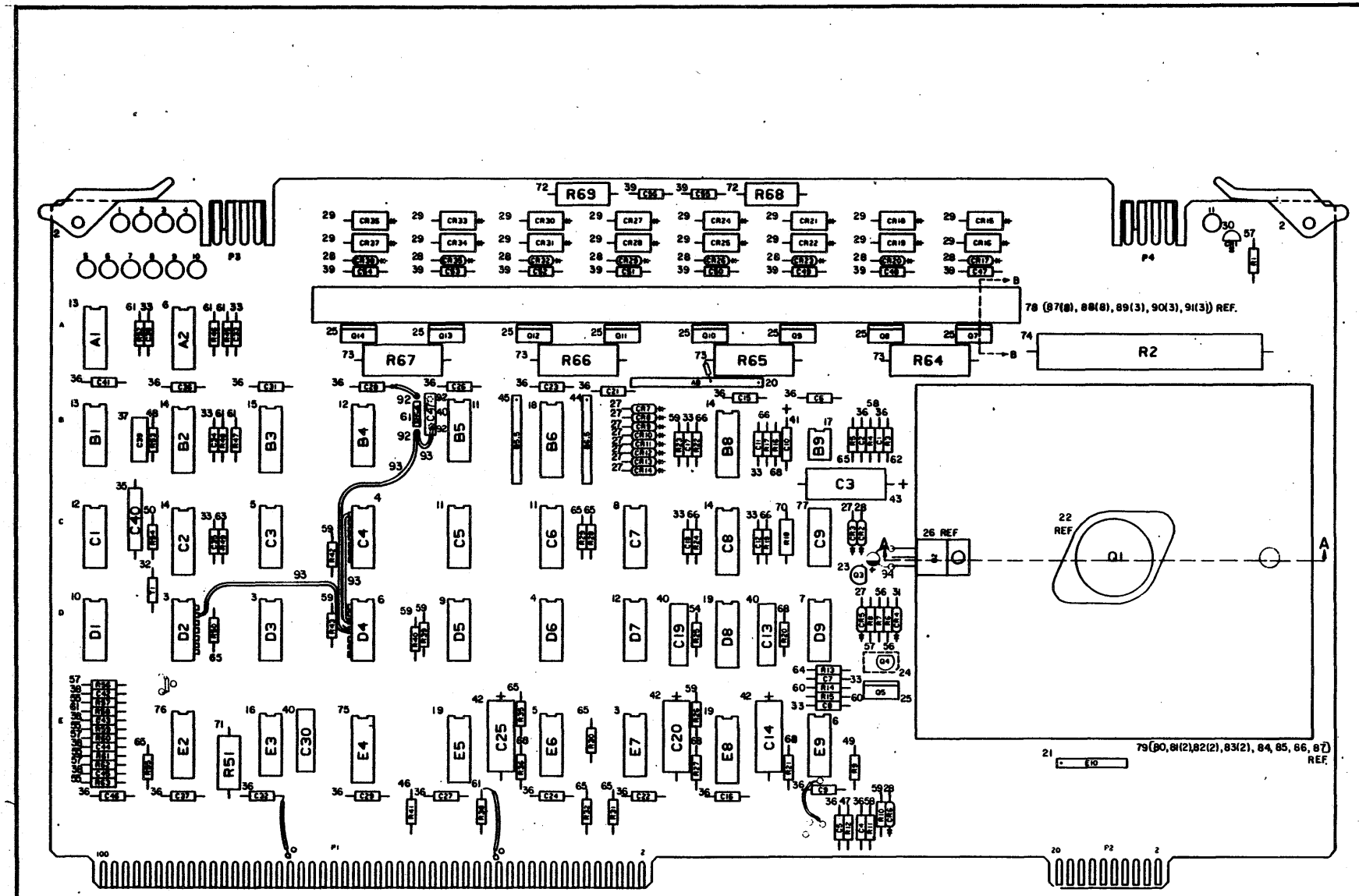

PRINT HEAD ELECTRONICS PCB ASSEMBLY

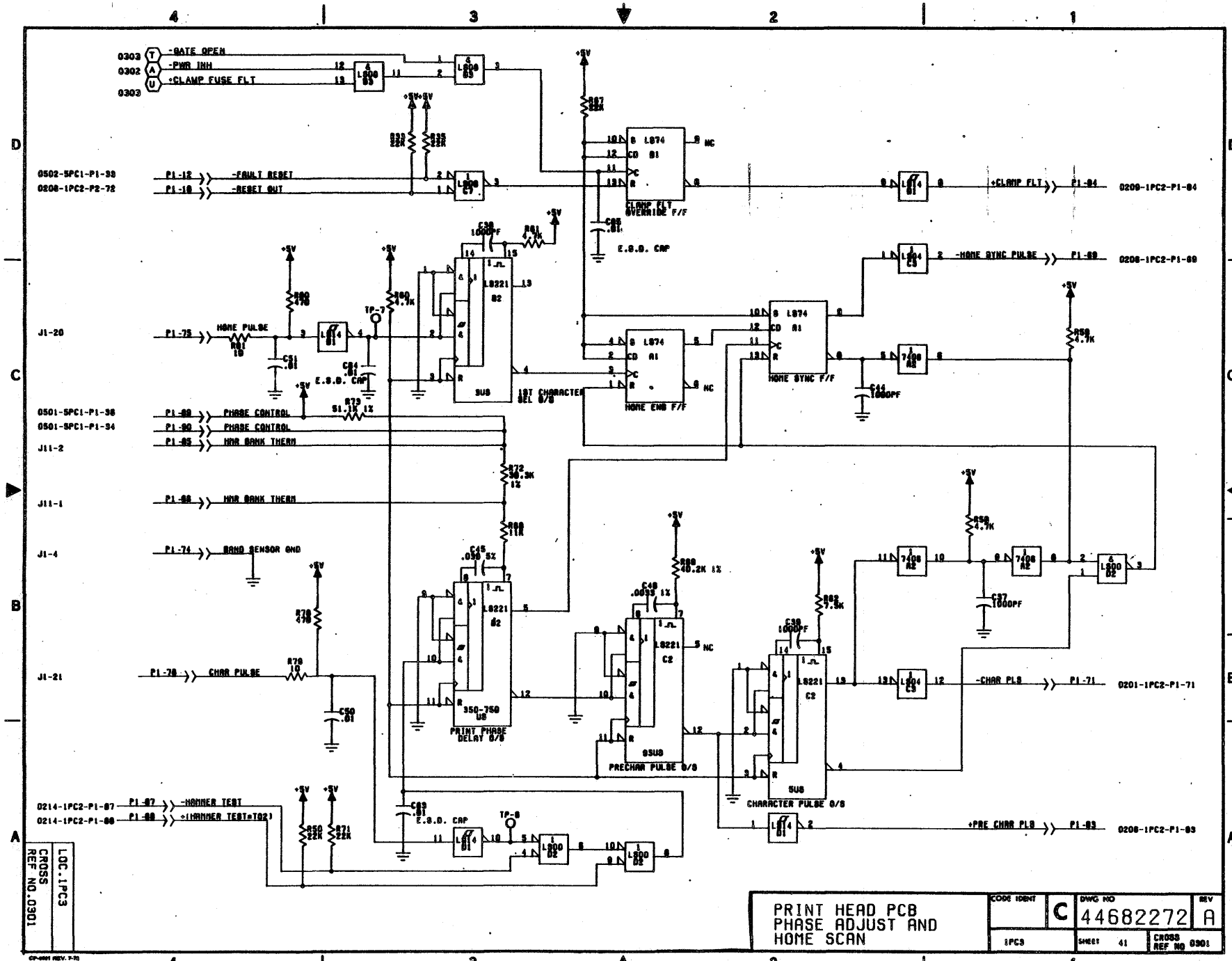
-GATE OPEN
-PWR INH
+CLAMP FUSE FLT
-FAULT RESET
-RESET OUT
+CLAMP FLT
-HOME SYNC PULSE
HOME PULSE
PHASE CONTROL
PHASE CONTROL
HAM BANK THERM
HAM BANK THERM
BAND SENSOR GND
CHAR PULSE
-CHAR PLS
+PRE CHAR PLS
-HAMMER TEST
+(HAMMER TEST=TD2)
CLAMP FLT OVERRIDE F/F
E.S.D. CAP
HOME SYNC F/F
HOME END F/F
1ST CHARACTER SEL 0/S
PRINT PHASE DELAY 0/S
PRECHAR PULSE 0/S
CHARACTER PULSE 0/S
PRINT HEAD PCB
PHASE ADJUST AND
HOME SCAN
CODE IDENT
C
DWG NO
44682272
REV
A
SHEET 41
CROSS REF NO 0301
CROSS REF NO.0301
LOC.1PC3

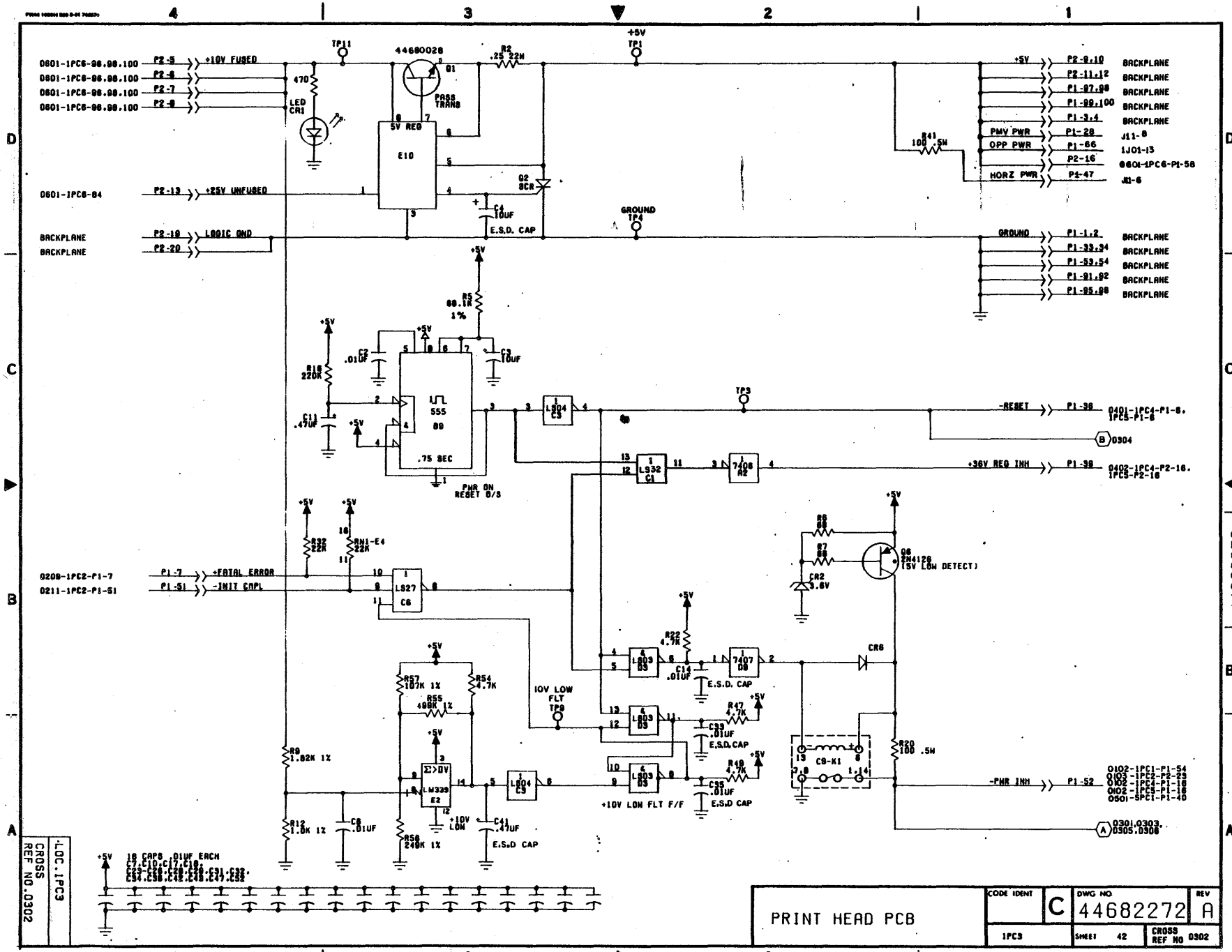
PRINT HEAD PCB
CODE IDENT C
DWG NO 44682272
REV A
1PC3
SHEET 42
CROSS REF NO 0302
44682272
11-49

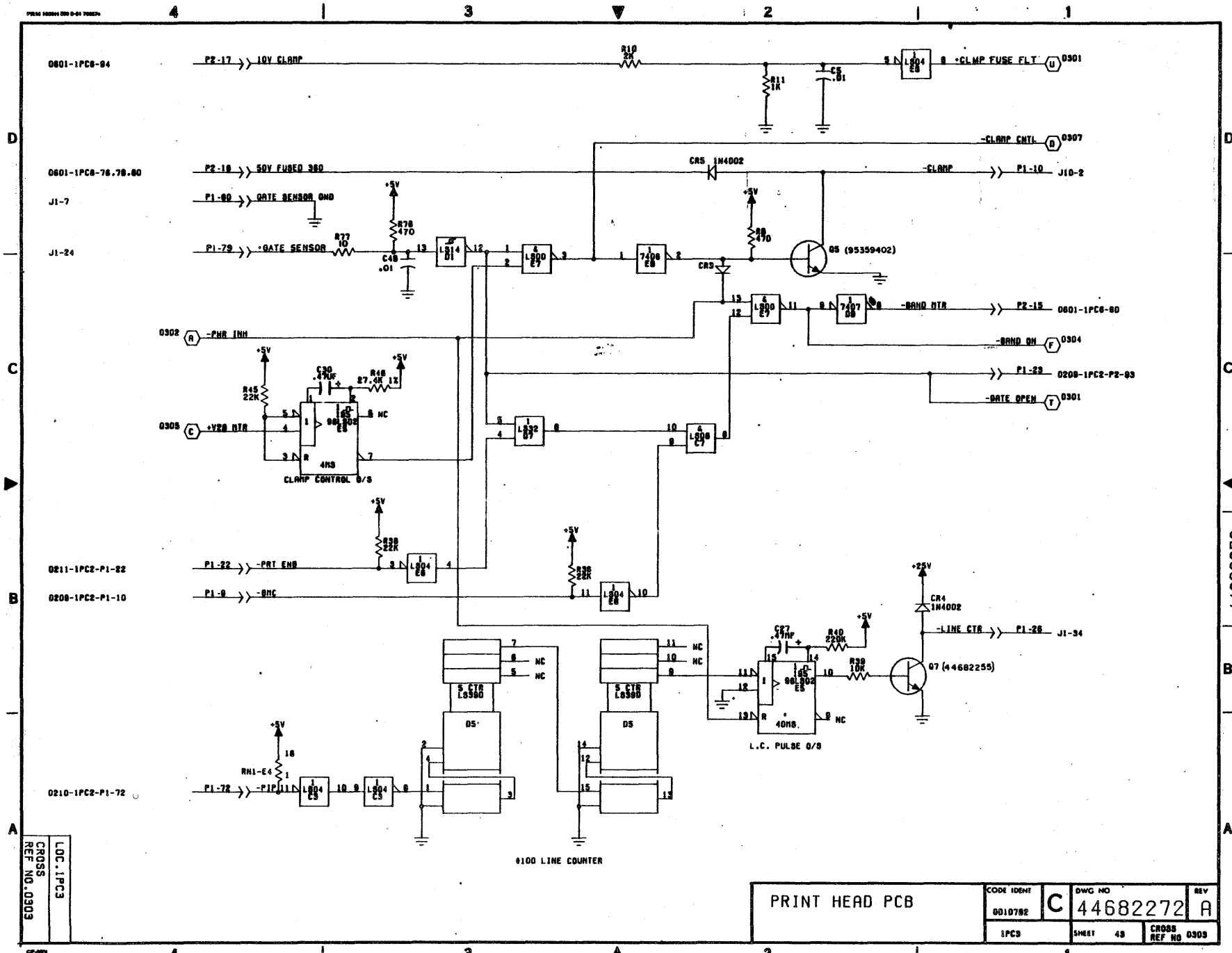

0601-1PC6-94
P2-17
10V CLAMP
R10 2K
R11 1K
C5 .01
+CLMP FUSE FLT
0301
-CLAMP CNTL
0307
0601-1PC6-76,78,80
P2-18
50V FUSED 360
CR5 1N4002
-CLAMP
P1-10
J10-2
J1-7
P1-80
GATE SENSOR GND
J1-24
P1-79
+GATE SENSOR
R77 10
R76 470
C48 .01
R8 470
Q5 (95359402)
CR3
-BAND MTR
P2-15
0601-1PC6-60
0302
-PWR INH
-BAND ON
0304
P1-23
0209-1PC2-P2-93
-GATE OPEN
0301
R45 22K
C30 .47UF
R46 27.4K 1%
0305
+V28 MTR
4MS
CLAMP CONTROL O/S
0211-1PC2-P1-22
P1-22
-PRT ENB
R38 22K
R36 22K
0209-1PC2-P1-10
P1-9
-BMC
+25V
CR4 1N4002
-LINE CTR
P1-26
J1-34
C27 .47MF
R40 220K
R39 10K
Q7 (44682255)
40MS
L.C. PULSE O/S
5 CTR LS390
D5
RN1-E4
0210-1PC2-P1-72
P1-72
-PIP
#100 LINE COUNTER
LOC.1PC3
CROSS REF NO.0303
PRINT HEAD PCB
CODE IDENT 0010782
C
DWG NO 44682272
REV A
1PC3
SHEET 43
CROSS REF NO 0303
44682272

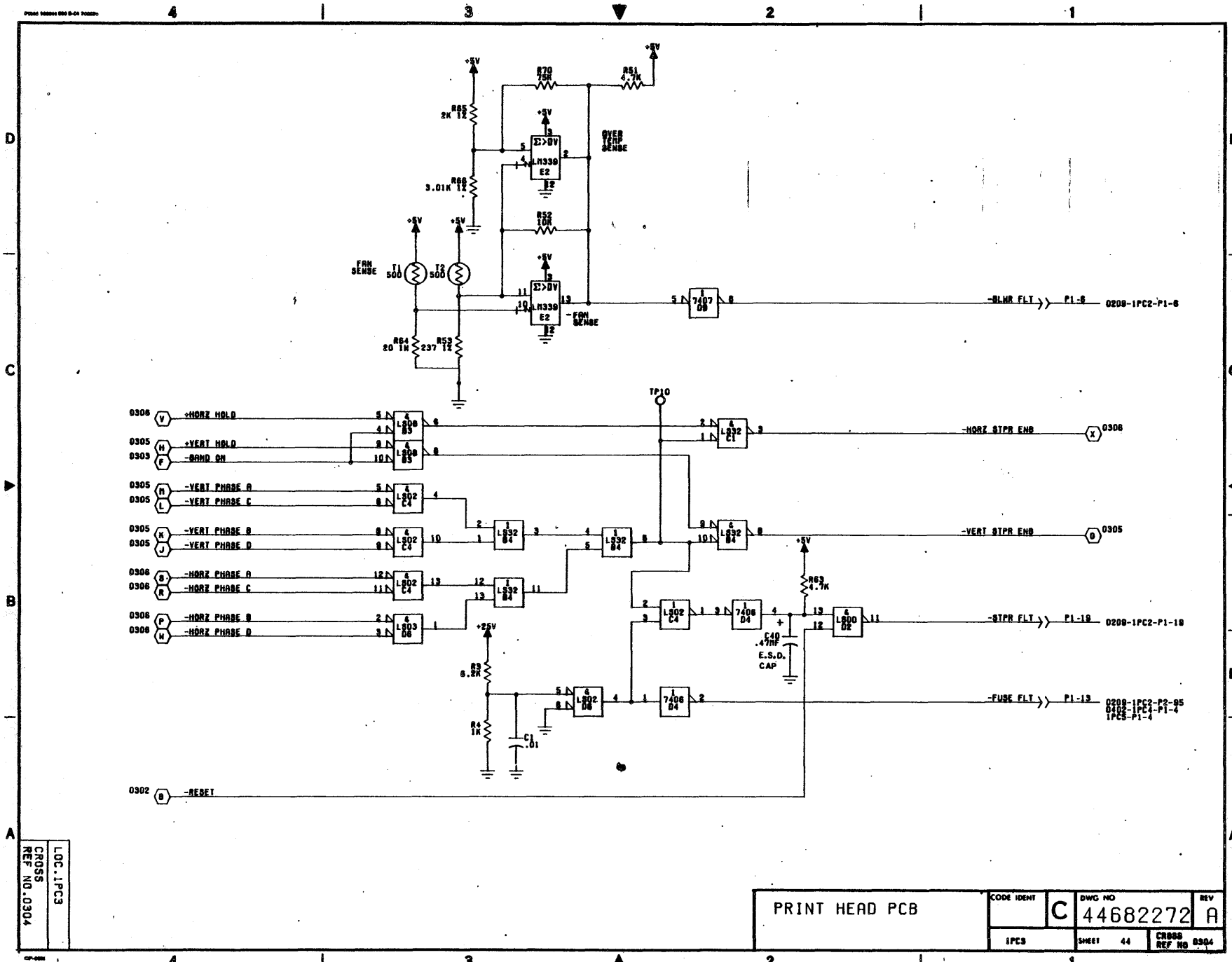

+5V
R70 75K
R51 4.7K
R65 2K 1%
R66 3.01K 1%
R52 10K
OVER TEMP SENSE
LM339 E2
FAN SENSE
T1 500
T2 500
R64 20 1W
R53 237 1%
-FAN SENSE
7407 D9
-BLWR FLT
P1-6
0209-1PC2-P1-6
TP10
0306 +HORZ HOLD
0305 +VERT HOLD
0303 -BAND ON
0305 -VERT PHASE A
0305 -VERT PHASE C
0305 -VERT PHASE B
0305 -VERT PHASE D
0306 -HORZ PHASE A
0306 -HORZ PHASE C
0306 -HORZ PHASE B
0306 -HORZ PHASE D
LS08 B3
LS02 C4
LS03 D6
LS32 B4
LS32 C1
-HORZ STPR ENB
0306
-VERT STPR ENB
0305
R63 4.7K
7406 D4
LS00 D2
C40 .47MF
E.S.D. CAP
-STPR FLT
P1-19
0209-1PC2-P1-19
+25V
R3 6.2K
R4 1K
C1 .01
-FUSE FLT
P1-13
0209-1PC2-P2-95
0402-1PC4-P1-4
1PC5-P1-4
0302 -RESET
LOC.1PC3
CROSS REF NO.0304
PRINT HEAD PCB
CODE IDENT
C
DWG NO 44682272
REV A
1PC3
SHEET 44
CROSS REF NO 0304
44682272

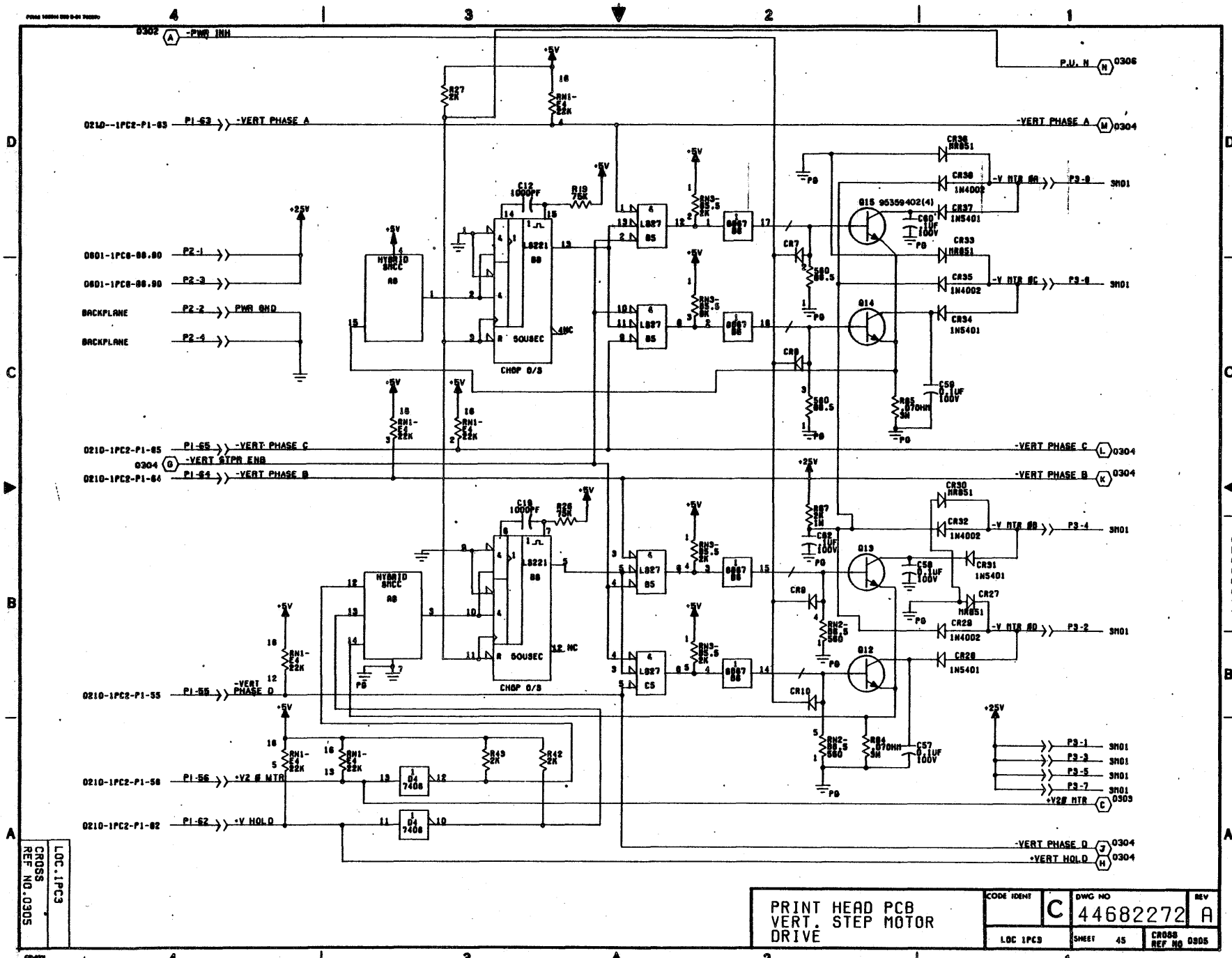

-PWR INH
-VERT PHASE A
-VERT PHASE C
-VERT STPR ENB
-VERT PHASE B
-VERT PHASE D
+V2 Ø MTR
+V HOLD
P.U. N
-V MTR ØA
-V MTR ØC
-V MTR ØB
-V MTR ØD
+V2Ø MTR
BACKPLANE
PWR GND
HYBRID SMCC
CHOP O/S
LS221
LS27
Q15 95359402(4)
Q14
Q13
Q12
LOC.1PC3
CROSS REF NO.0305
PRINT HEAD PCB
VERT. STEP MOTOR
DRIVE
CODE IDENT
C
DWG NO
44682272
REV
A
LOC 1PC3
SHEET 45
CROSS REF NO 0305

44682272

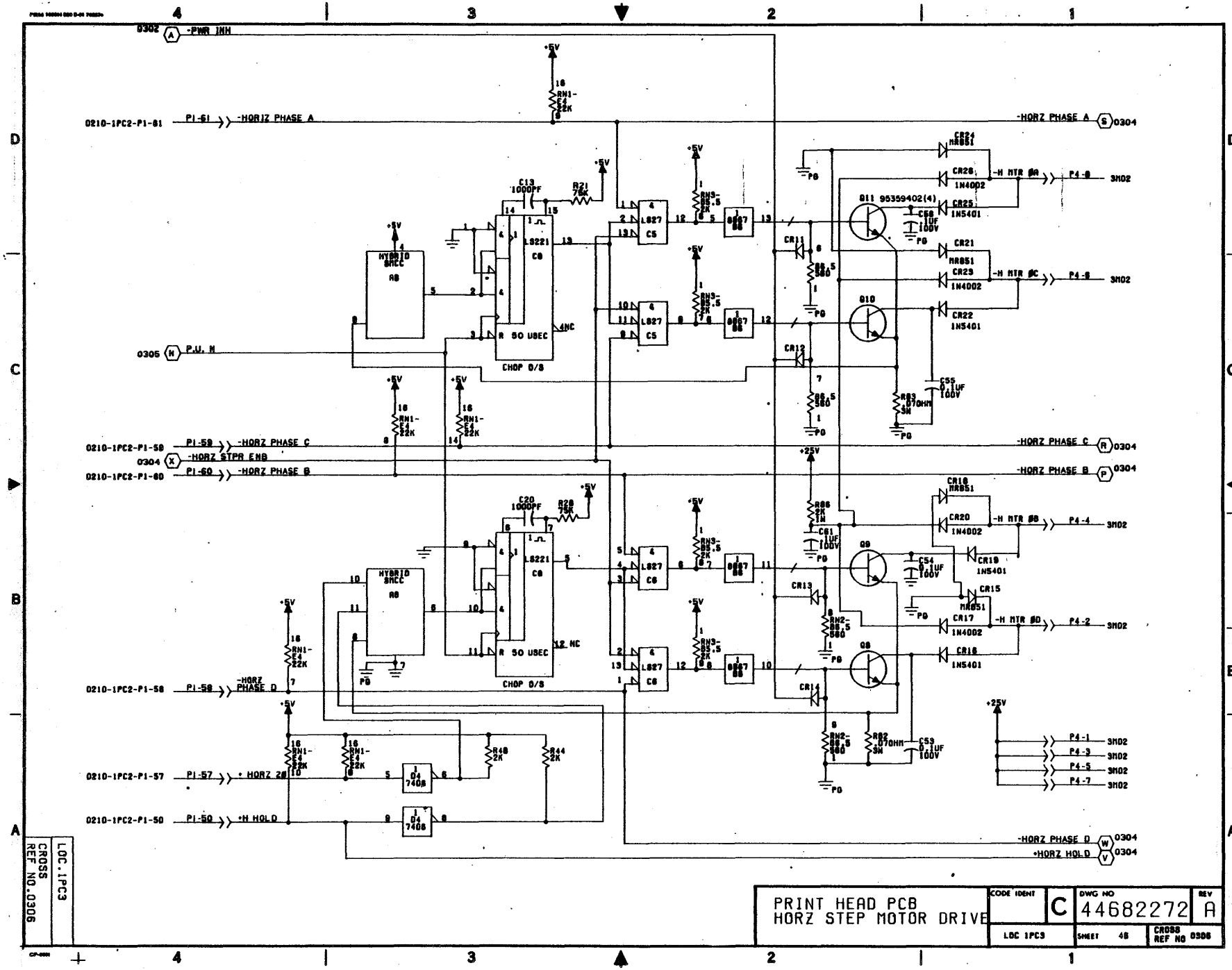

0302 A -PWR INH
0210-1PC2-P1-61 P1-61 -HORIZ PHASE A
-HORZ PHASE A S 0304
0305 N P.U. N
0210-1PC2-P1-59 P1-59 -HORZ PHASE C
0304 X -HORZ STPR ENB
0210-1PC2-P1-60 P1-60 -HORZ PHASE B
-HORZ PHASE C R 0304
-HORZ PHASE B P 0304
0210-1PC2-P1-58 P1-58 -HORZ PHASE D
0210-1PC2-P1-57 P1-57 + HORZ 2Ø
0210-1PC2-P1-50 P1-50 +H HOLD
-HORZ PHASE D W 0304
+HORZ HOLD V 0304
-H MTR ØA P4-8 3M02
-H MTR ØC P4-6 3M02
-H MTR ØB P4-4 3M02
-H MTR ØD P4-2 3M02
P4-1 3M02
P4-3 3M02
P4-5 3M02
P4-7 3M02
HYBRID SMCC A8
LS221 C8
CHOP D/S
50 USEC
LS27 C5
LS27 C6
Q11 95359402(4)
Q10
Q9
Q8
CR24 MR851
CR26 1N4002
CR25 1N5401
CR21 MR851
CR23 1N4002
CR22 1N5401
CR18 MR851
CR20 1N4002
CR19 1N5401
CR15 MR851
CR17 1N4002
CR16 1N5401
C13 1000PF
R21 75K
C20 1000PF
R28 75K
C58 .1UF 100V
C55 0.1UF 100V
C61 .1UF 100V
C54 0.1UF 100V
C53 0.1UF 100V
R83 .070HM 3W
R82 .070HM 3W
R86 2K 1W
R48 2K
R44 2K
D4 7406
+5V
+25V
PG
LOC.1PC3
CROSS REF NO.0306
PRINT HEAD PCB
HORZ STEP MOTOR DRIVE
CODE IDENT C
DWG NO 44682272
REV A
LOC 1PC3
SHEET 48
CROSS REF NO 0306

44682272

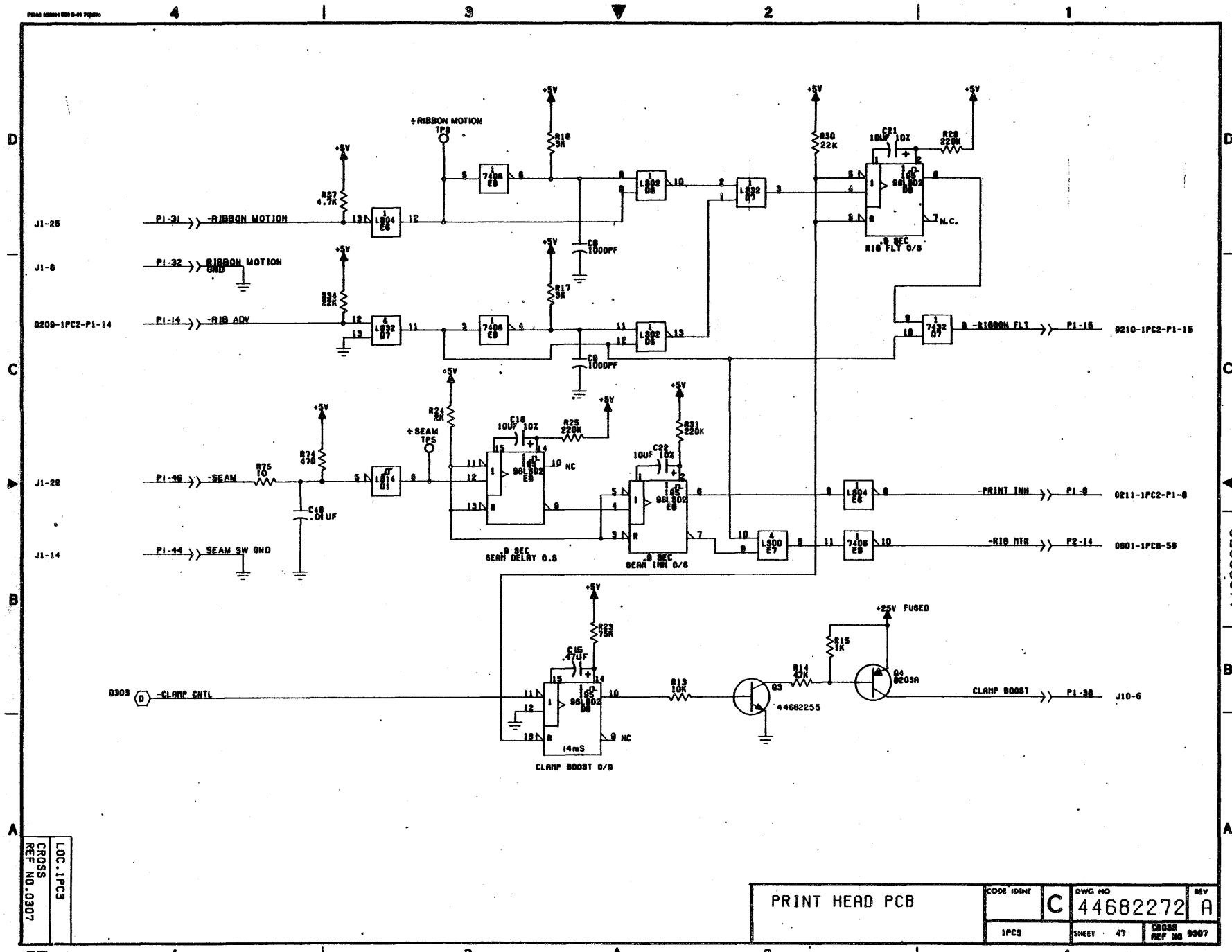

CROSS REF NO. 0907	LOC. 1PC3

PRINT HEAD PCB	CODE IDENT	C	DWG NO 44682272 REV A
	1PC8	SHEET 47	CROSS REF NO 0907

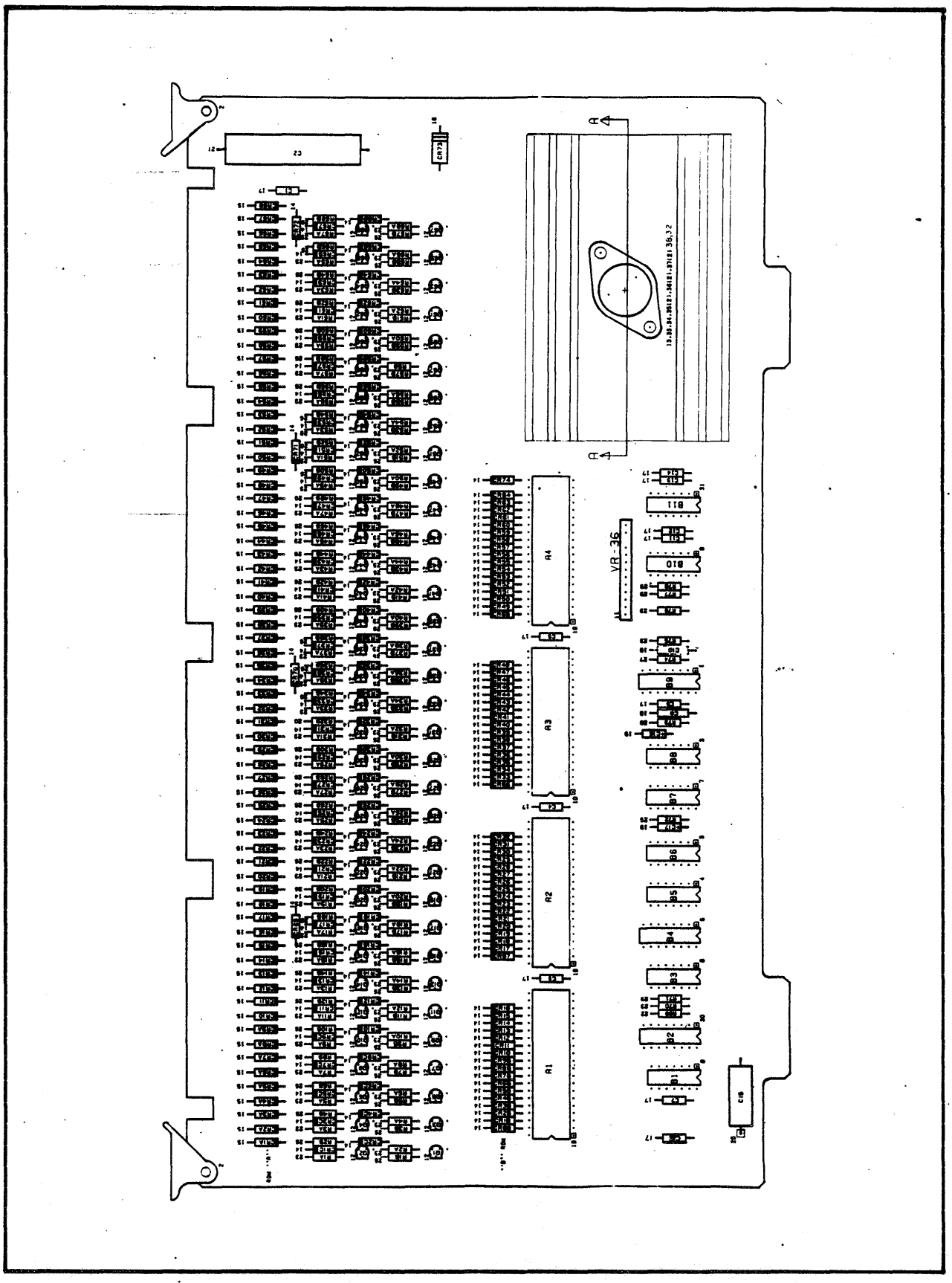

HAMMER DRIVER PCB ASSEMBLY

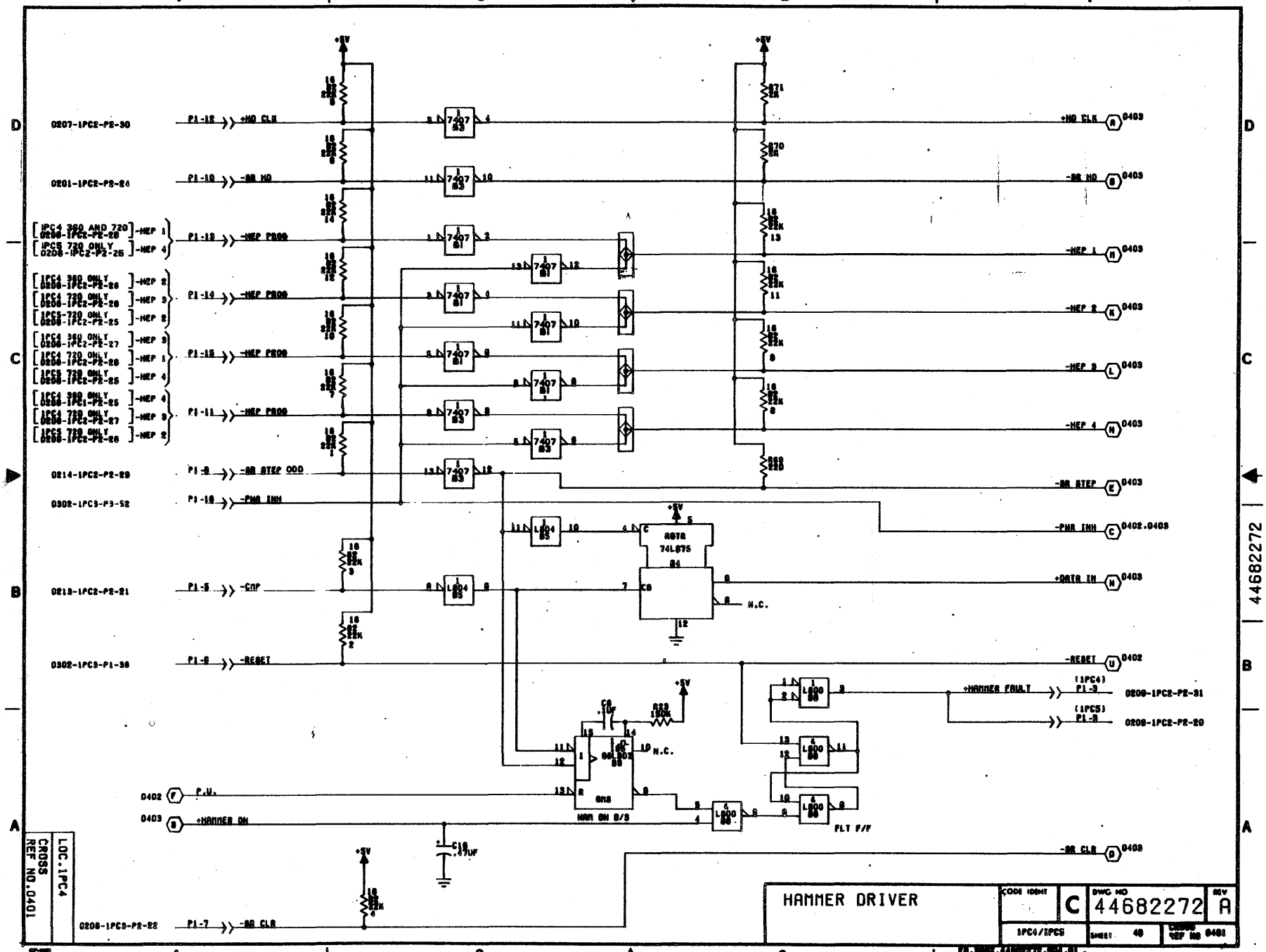
HAMMER DRIVER
CODE IDENT
C
DWG NO
44682272
REV
A
IPC4/IPC5
SHEET 40
CROSS REF NO. 0401
LOC. IPC4
11-56
44682272

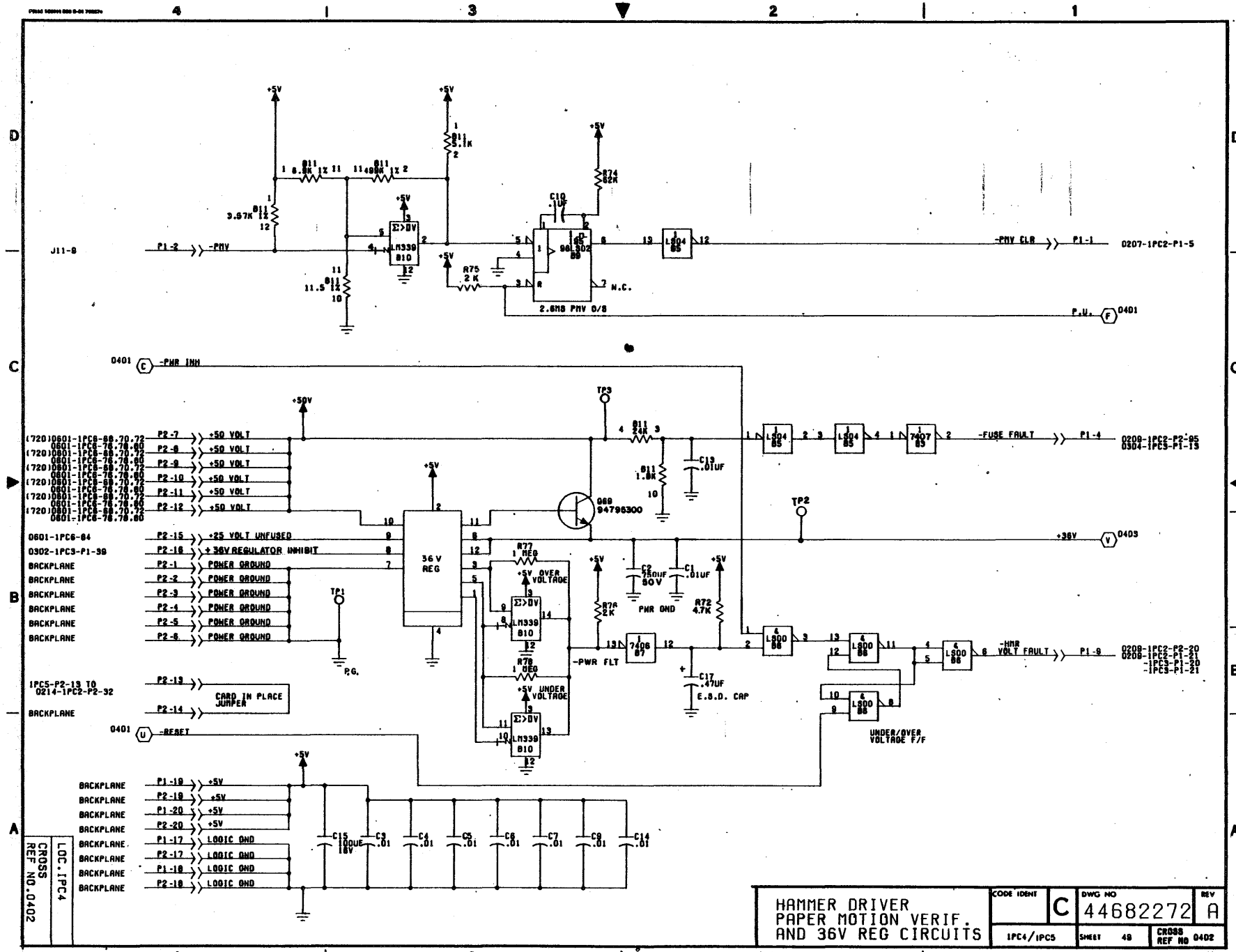
HAMMER DRIVER
PAPER MOTION VERIF.
AND 36V REG CIRCUITS
CODE IDENT
C
DWG NO
44682272
REV
A
1PC4/1PC5
SHEET 49
CROSS REF NO 0402
LOC.1PC4
CROSS REF NO.0402
J11-9
P1-2
-PMV
-PMV CLR
P1-1
0207-1PC2-P1-5
P.U.
0401
-PWR INH
-FUSE FAULT
P1-4
0209-1PC2-P2-95
0304-1PC3-P1-13
+50 VOLT
+25 VOLT UNFUSED
+36V REGULATOR INHIBIT
POWER GROUND
BACKPLANE
36 V REG
+36V
0403
+5V OVER VOLTAGE
+5V UNDER VOLTAGE
-PWR FLT
PWR GND
E.S.D. CAP
-HMR VOLT FAULT
P1-9
0209-1PC2-P2-20
0209-1PC2-P1-21
-1PC3-P1-20
-1PC3-P1-21
UNDER/OVER VOLTAGE F/F
1PC5-P2-13 TO 0214-1PC2-P2-32
CARD IN PLACE JUMPER
-RESET
LOGIC GND
2.6MS PMV O/S
N.C.
TP1
TP2
TP3
P.G.
Q69 94796300
+5V
+50V
+36V

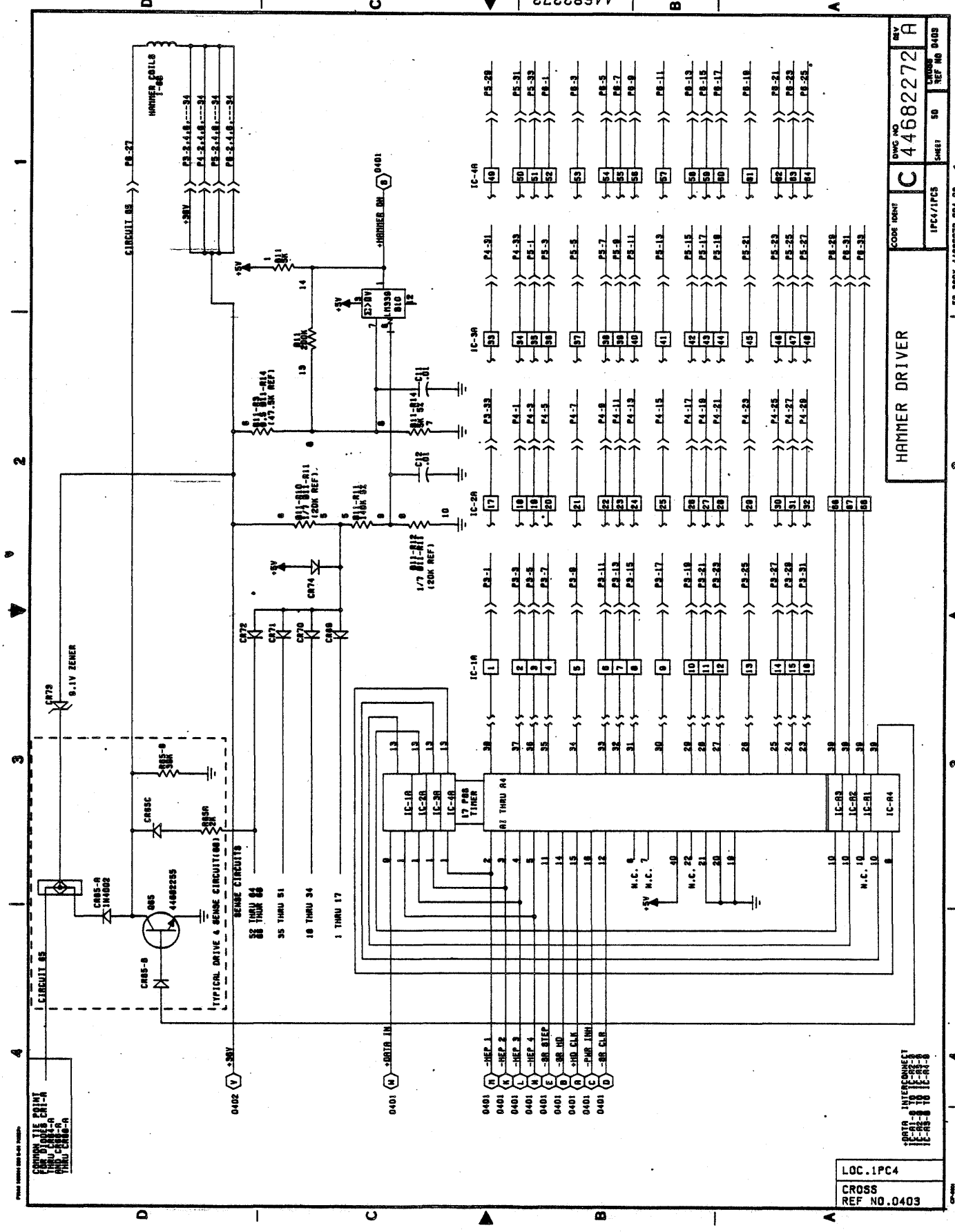
HAMMER DRIVER
44682272
LOC.1PC4
CROSS
REF NO.0403
TYPICAL DRIVE & SENSE CIRCUIT(68)
SENSE CIRCUITS
17 PSS TIMER
9.1V ZENER
HAMMER COILS
+HAMMER ON
+DATA IN
-HEP 1
-HEP 2
-HEP 3
-HEP 4
-SR STEP
-SR HD
+HD CLK
-PWR INH
-SR CLR
COMMON TIE POINT FOR DIODES CR1-A THRU CR64-A AND CR65-A THRU CR68-A
+DATA INTERCONNECT

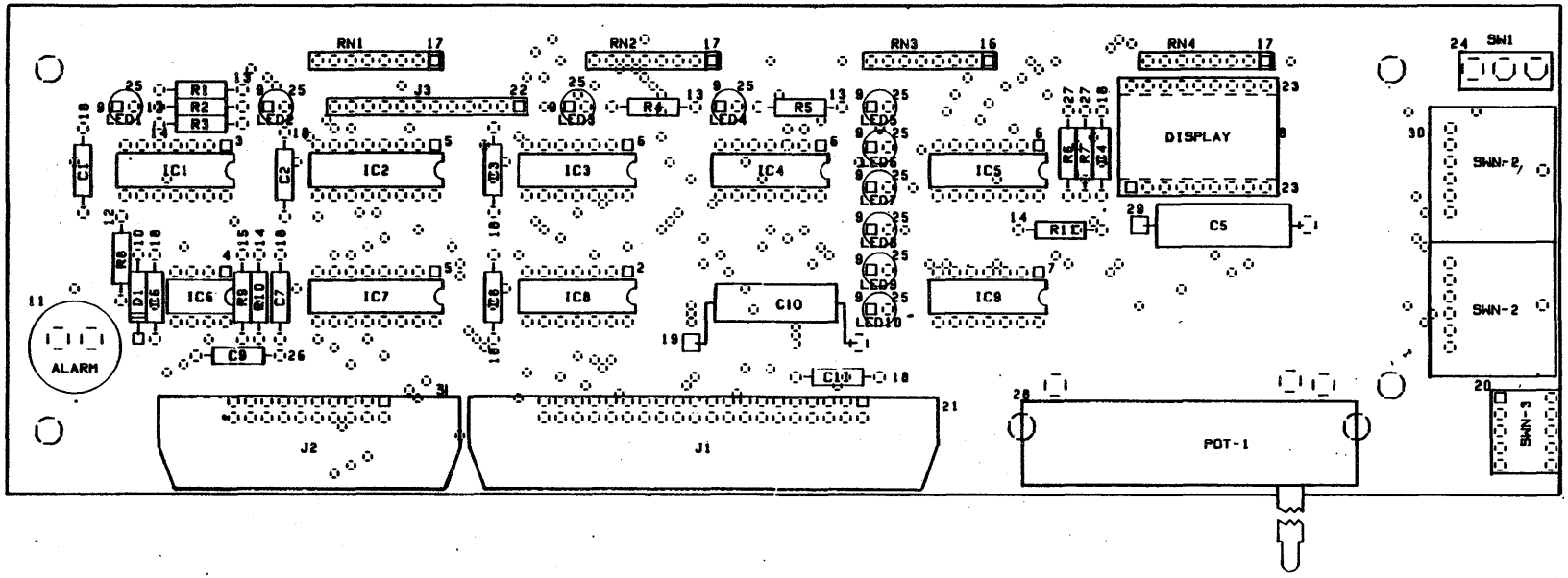

CONTROL PANEL PCB ASSEMBLY

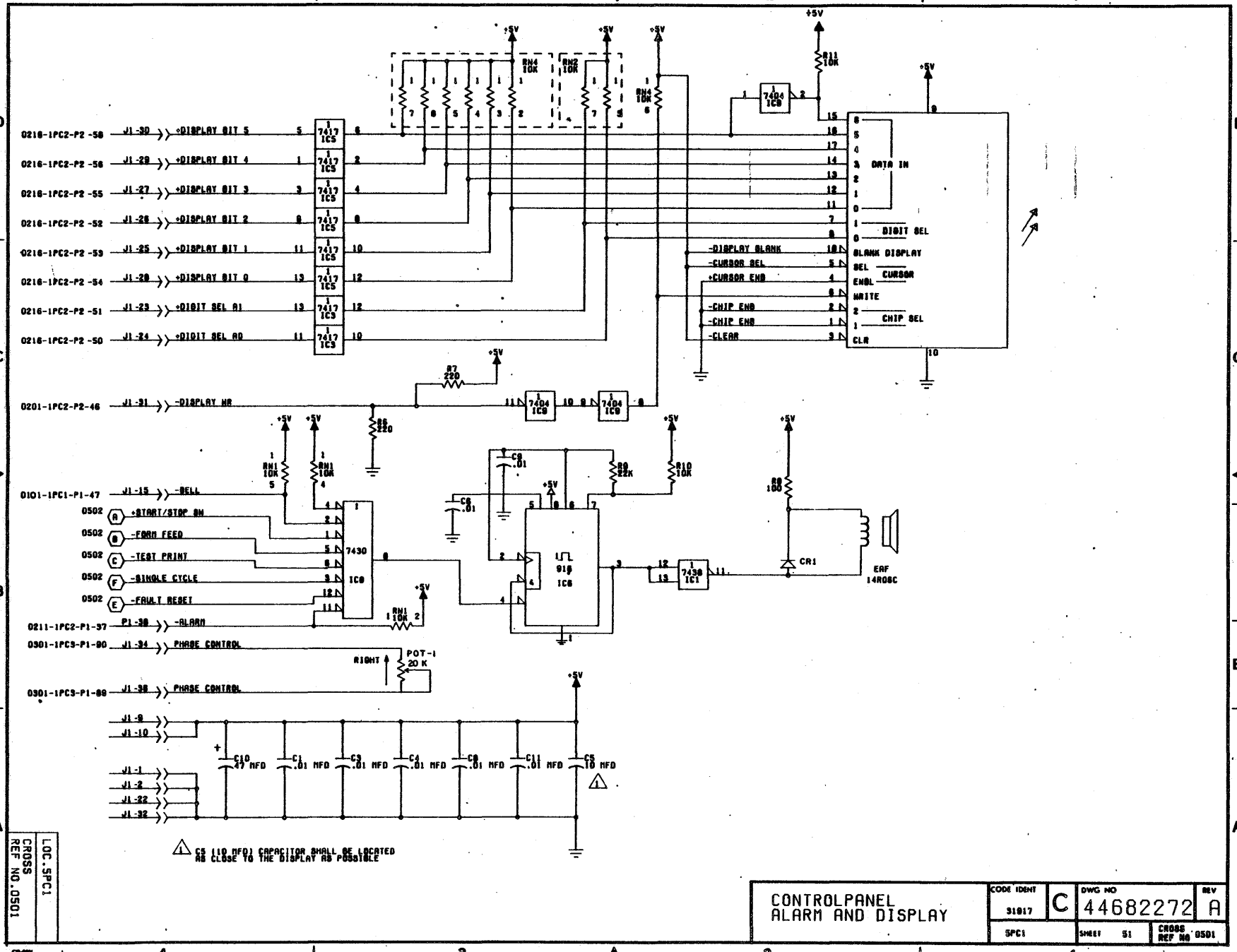

0216-1PC2-P2-58 J1-30 +DISPLAY BIT 5
0216-1PC2-P2-56 J1-29 +DISPLAY BIT 4
0216-1PC2-P2-55 J1-27 +DISPLAY BIT 3
0216-1PC2-P2-52 J1-26 +DISPLAY BIT 2
0216-1PC2-P2-53 J1-25 +DISPLAY BIT 1
0216-1PC2-P2-54 J1-28 +DISPLAY BIT 0
0216-1PC2-P2-51 J1-23 +DIGIT SEL A1
0216-1PC2-P2-50 J1-24 +DIGIT SEL A0
0201-1PC2-P2-46 J1-31 -DISPLAY WR
0101-1PC1-P1-47 J1-15 -BELL
0502 +START/STOP SW
0502 -FORM FEED
0502 -TEST PRINT
0502 -SINGLE CYCLE
0502 -FAULT RESET
0211-1PC2-P1-37 P1-38 -ALARM
0301-1PC3-P1-90 J1-34 PHASE CONTROL
0301-1PC3-P1-89 J1-36 PHASE CONTROL
J1-9
J1-10
J1-1
J1-2
J1-22
J1-32
7417 IC5
7417 IC3
7404 IC9
7430 IC8
916 IC6
7438 IC1
RN4 10K
RN2 10K
RN1 10K
R11 10K
R7 220
R6 220
R9 22K
R10 10K
R8 100
CR1
EAF 14R06C
POT-1 20 K
RIGHT
C10 47 MFD
C1 .01 MFD
C3 .01 MFD
C4 .01 MFD
C8 .01 MFD
C11 .01 MFD
C5 10 MFD
DATA IN
DIGIT SEL
BLANK DISPLAY
SEL
ENBL
CURSOR
WRITE
CHIP SEL
CLR
-DISPLAY BLANK
-CURSOR SEL
+CURSOR ENB
-CHIP ENB
-CHIP ENB
-CLEAR
+5V
C5 (10 MFD) CAPACITOR SHALL BE LOCATED AS CLOSE TO THE DISPLAY AS POSSIBLE
LOC.5PC1
CROSS REF NO.0501
CONTROLPANEL ALARM AND DISPLAY
CODE IDENT 31917
C
DWG NO 44682272
REV A
5PC1
SHEET 51
CROSS REF NO 0501
44682272

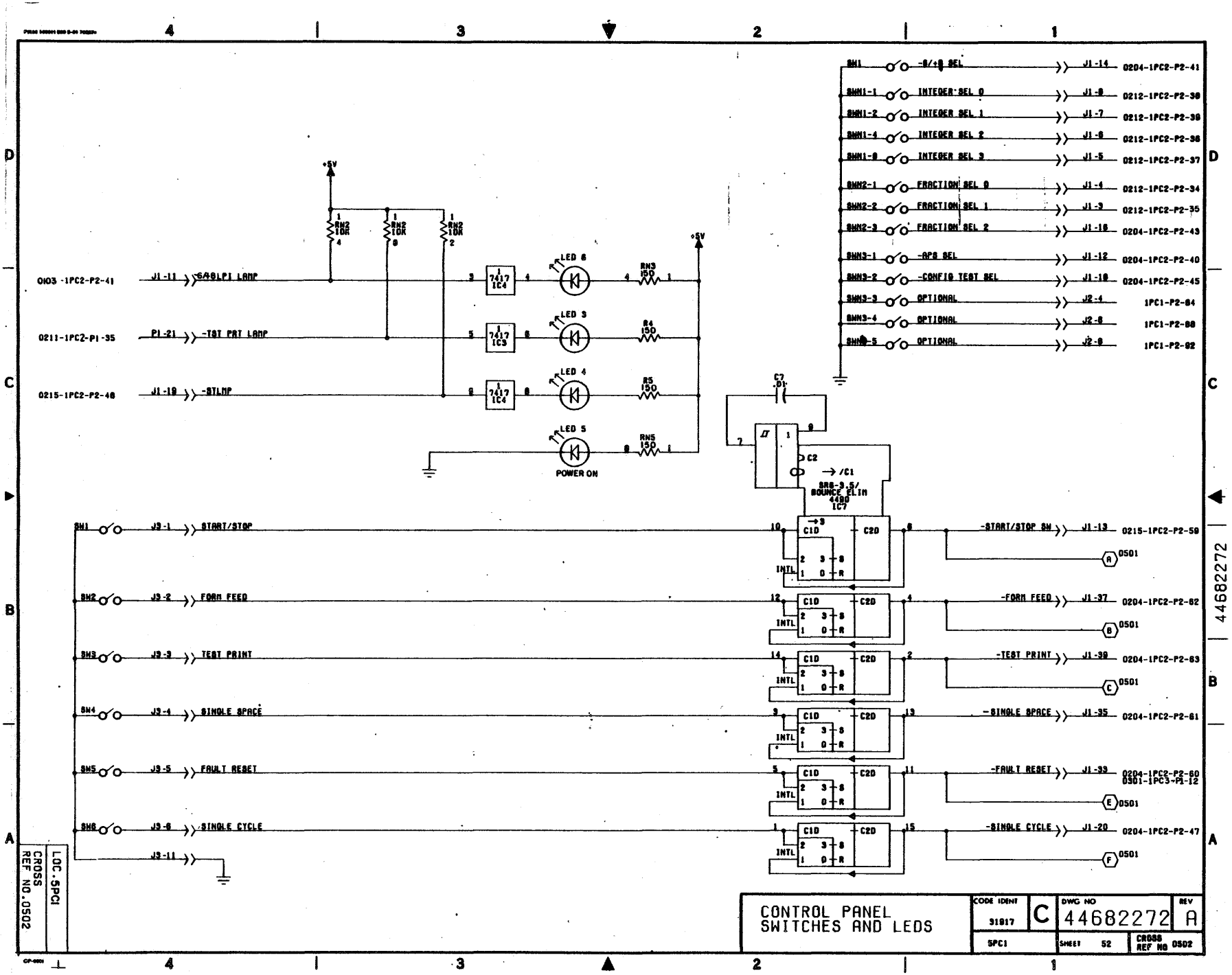

CONTROL PANEL
SWITCHES AND LEDS
CODE IDENT 31917
C
DWG NO 44682272
REV A
5PC1
SHEET 52
CROSS REF NO 0502
LOC.5PC1
CROSS REF NO.0502
44682272
0103-1PC2-P2-41
0211-1PC2-P1-35
0215-1PC2-P2-48
J1-11 -6/8LPI LAMP
P1-21 -TST PRT LAMP
J1-19 -STLMP
+5V
RN2 10K
7417 IC4
7417 IC3
LED 6
LED 3
LED 4
LED 5
POWER ON
RN3 150
R4 150
R5 150
RN5 150
SW1 -6/+8 SEL J1-14 0204-1PC2-P2-41
SWN1-1 INTEGER SEL 0 J1-8 0212-1PC2-P2-38
SWN1-2 INTEGER SEL 1 J1-7 0212-1PC2-P2-39
SWN1-4 INTEGER SEL 2 J1-6 0212-1PC2-P2-36
SWN1-8 INTEGER SEL 3 J1-5 0212-1PC2-P2-37
SWN2-1 FRACTION SEL 0 J1-4 0212-1PC2-P2-34
SWN2-2 FRACTION SEL 1 J1-3 0212-1PC2-P2-35
SWN2-3 FRACTION SEL 2 J1-16 0204-1PC2-P2-43
SWN3-1 -APS SEL J1-12 0204-1PC2-P2-40
SWN3-2 -CONFIG TEST SEL J1-10 0204-1PC2-P2-45
SWN3-3 OPTIONAL J2-4 1PC1-P2-84
SWN3-4 OPTIONAL J2-6 1PC1-P2-88
SWN3-5 OPTIONAL J2-8 1PC1-P2-92
C7 .01
C2
/C1
SR6-3.5/ BOUNCE ELIM 4490 IC7
SW1 J3-1 START/STOP
SW2 J3-2 FORM FEED
SW3 J3-3 TEST PRINT
SW4 J3-4 SINGLE SPACE
SW5 J3-5 FAULT RESET
SW6 J3-6 SINGLE CYCLE
J3-11
C1D
C2D
INTL
-START/STOP SW J1-13 0215-1PC2-P2-59
-FORM FEED J1-37 0204-1PC2-P2-62
-TEST PRINT J1-39 0204-1PC2-P2-63
-SINGLE SPACE J1-35 0204-1PC2-P2-61
-FAULT RESET J1-33 0204-1PC2-P2-60 0301-1PC3-P1-12
-SINGLE CYCLE J1-20 0204-1PC2-P2-47
0501

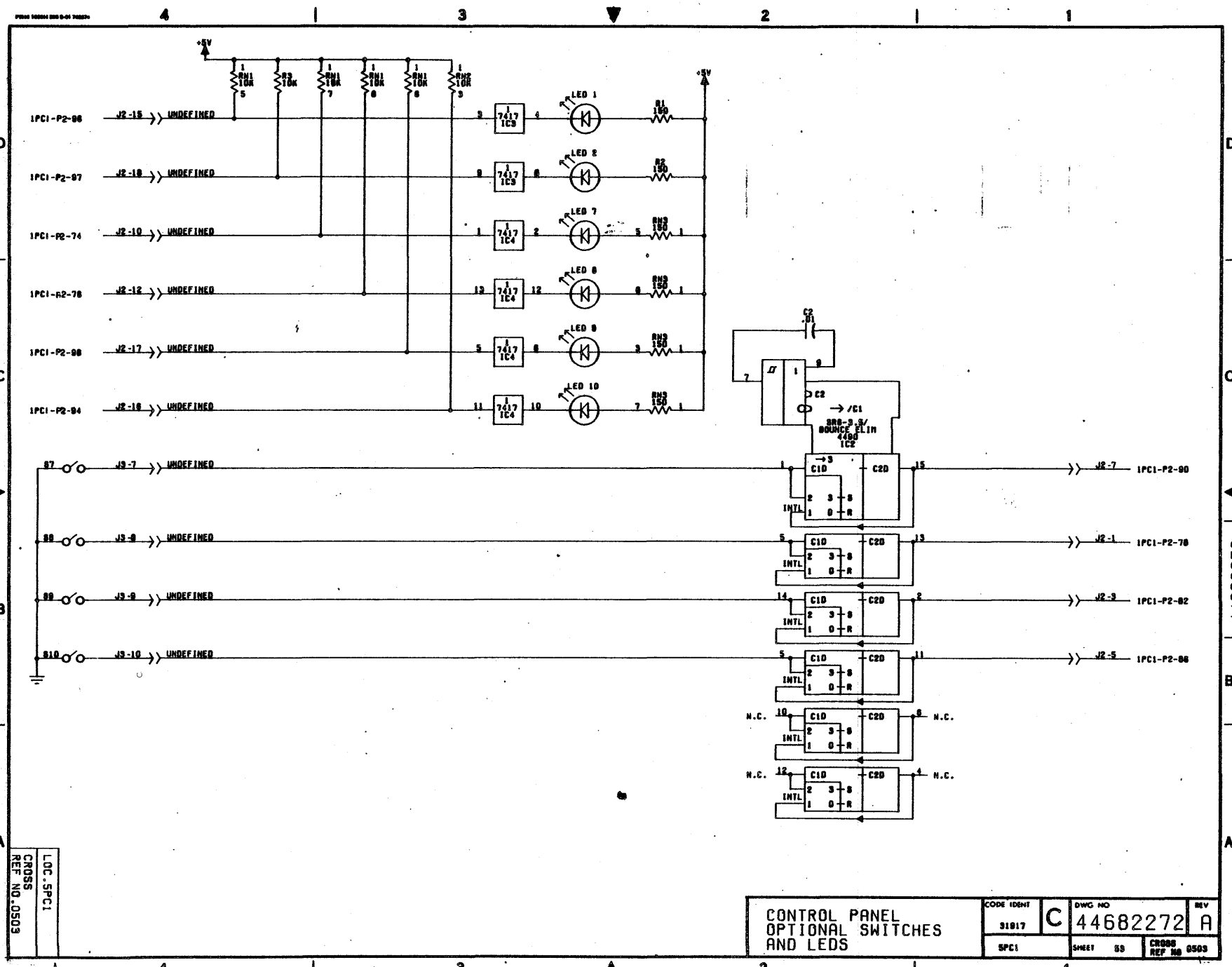
CONTROL PANEL
OPTIONAL SWITCHES
AND LEDS
CODE IDENT 91917
C
DWG NO 44682272
REV A
5PC1
SHEET 53
CROSS REF NO 0503
LOC.5PC1
CROSS REF NO.0503
11-62
44682272
+5V
UNDEFINED
LED 1
LED 2
LED 7
LED 8
LED 9
LED 10
INTL
N.C.

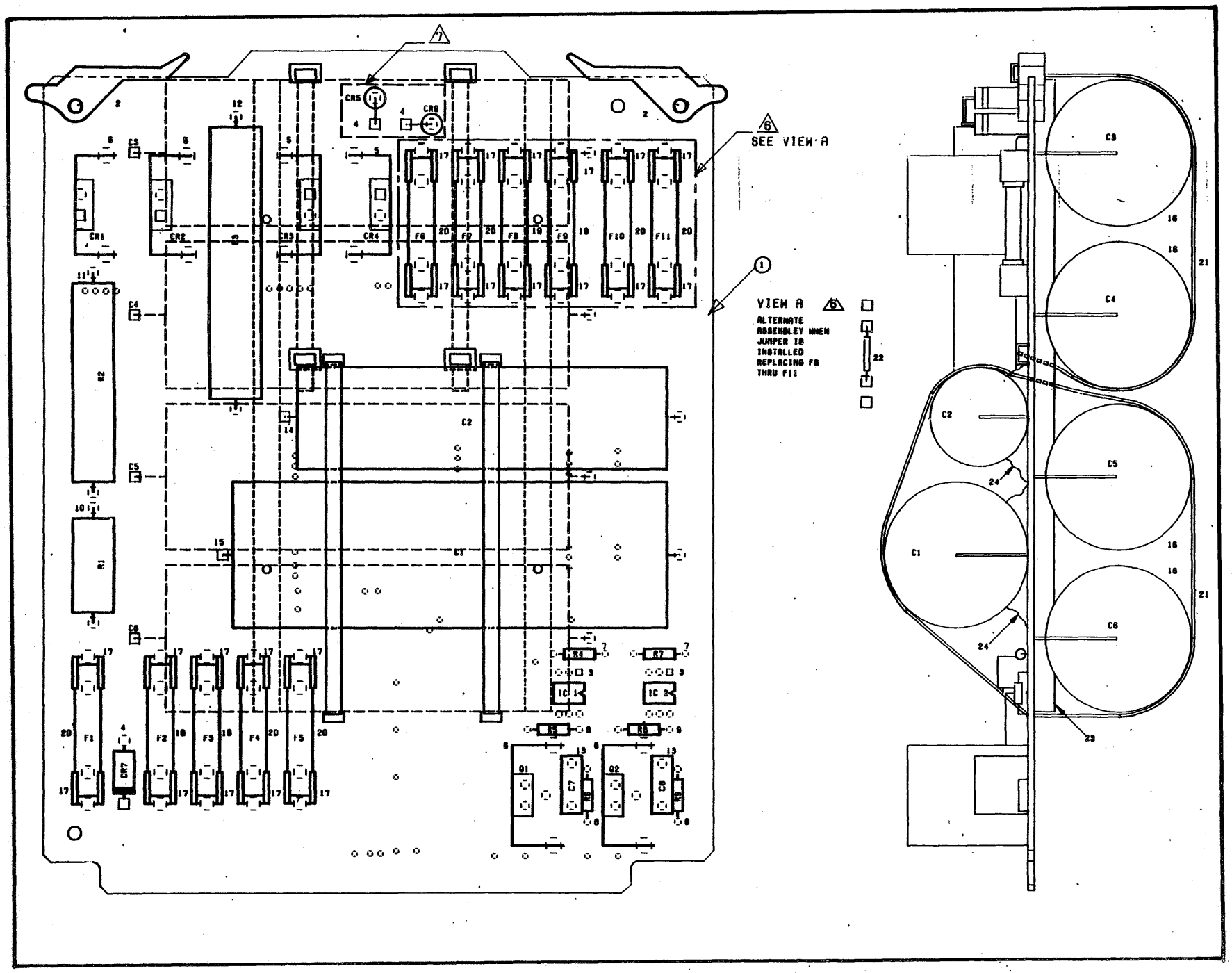

INPUT POWER PCB ASSEMBLY

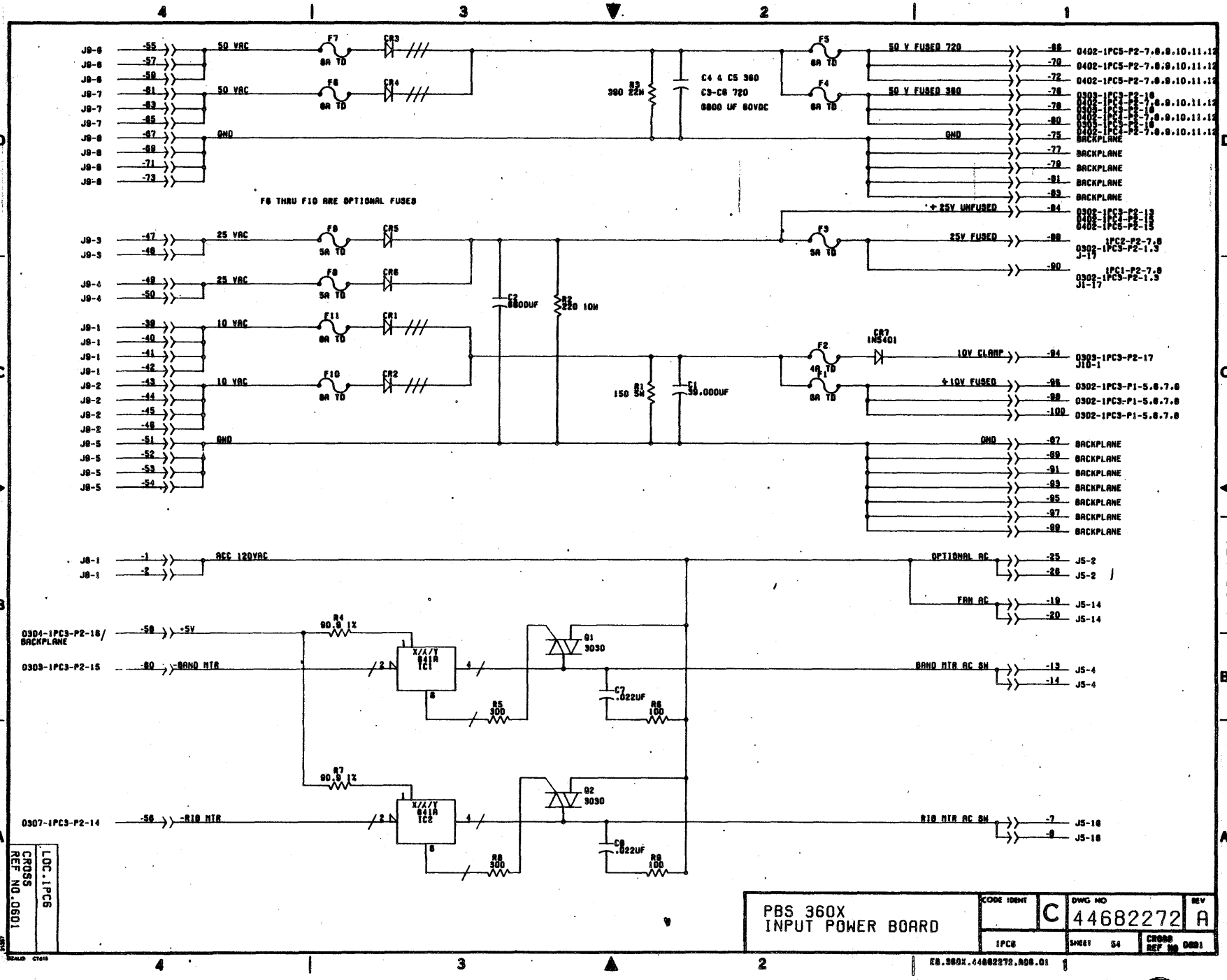
4
3
2
1
J8-6 -55
J8-6 -57
J8-6 -59
J8-7 -61
J8-7 -63
J8-7 -65
J8-8 -67
J8-8 -69
J8-8 -71
J8-8 -73
50 VAC
50 VAC
GND
F7
8A TD
F8
8A TD
CR3
CR4
R3 390 22W
C4 & C5 360
C9-C8 720
8800 UF 80VDC
F5
8A TD
F4
8A TD
50 V FUSED 720
50 V FUSED 380
GND
-68
-70
-72
-76
-78
-80
-75
-77
-79
-81
-83
0402-1PC5-P2-7.8.9.10.11.12
0402-1PC5-P2-7.8.9.10.11.12
0402-1PC5-P2-7.8.9.10.11.12
0303-1PC3-P2-10
0303-1PC3-P2-7.8.9.10.11.12
0303-1PC3-P2-10
0402-1PC5-P2-7.8.9.10.11.12
0303-1PC3-P2-10
0402-1PC5-P2-7.8.9.10.11.12
BACKPLANE
BACKPLANE
BACKPLANE
BACKPLANE
BACKPLANE
F6 THRU F10 ARE OPTIONAL FUSES
J8-3 -47
J8-3 -48
J8-4 -49
J8-4 -50
25 VAC
25 VAC
F9
5A TD
F9
5A TD
CR5
CR6
C2 6800UF
R2 220 10W
+25V UNFUSED
F3
5A TD
25V FUSED
-84
-88
-90
0303-1PC3-P2-18
0402-1PC5-P2-18
0402-1PC5-P2-18
1PC2-P2-7.8
0302-1PC3-P2-1.3
J-17
1PC1-P2-7.8
0302-1PC3-P2-1.3
J1-17
J8-1 -39
J8-1 -40
J8-1 -41
J8-1 -42
J8-2 -43
J8-2 -44
J8-2 -45
J8-2 -46
J8-5 -51
J8-5 -52
J8-5 -53
J8-5 -54
10 VAC
10 VAC
GND
F11
8A TD
F10
8A TD
CR1
CR2
R1 150 5W
C1 30.000UF
CR7 IN5401
F2
4A TD
F1
8A TD
10V CLAMP
+10V FUSED
GND
-94
-96
-98
-100
-87
-89
-91
-93
-95
-97
-99
0303-1PC3-P2-17
J10-1
0302-1PC3-P1-5.6.7.8
0302-1PC3-P1-5.6.7.8
0302-1PC3-P1-5.6.7.8
BACKPLANE
BACKPLANE
BACKPLANE
BACKPLANE
BACKPLANE
BACKPLANE
BACKPLANE
J8-1 -1
J8-1 -2
ACC 120VAC
OPTIONAL AC
FAN AC
-25
-26
-19
-20
J5-2
J5-2
J5-14
J5-14
0304-1PC3-P2-16/ BACKPLANE -58 +5V
0309-1PC3-P2-15 -60 -BAND MTR
R4 90.9 1%
X/A/Y 841A IC1
Q1 3030
C7 .022UF
R5 300
R6 100
BAND MTR AC SW
-13
-14
J5-4
J5-4
0307-1PC3-P2-14 -56 -RIB MTR
R7 90.9 1%
X/A/Y 841A IC2
Q2 3030
C8 .022UF
R8 300
R9 100
RIB MTR AC SW
-7
-8
J5-16
J5-16
CROSS REF NO.0601
LOC.1PC6
PBS 360X
INPUT POWER BOARD
CODE IDENT
C
DWG NO
44682272
REV
A
1PC8
SHEET 54
CROSS REF NO 0601
E8.360X.44682272.R08.01

I/O ADAPTOR ASSEMBLIES

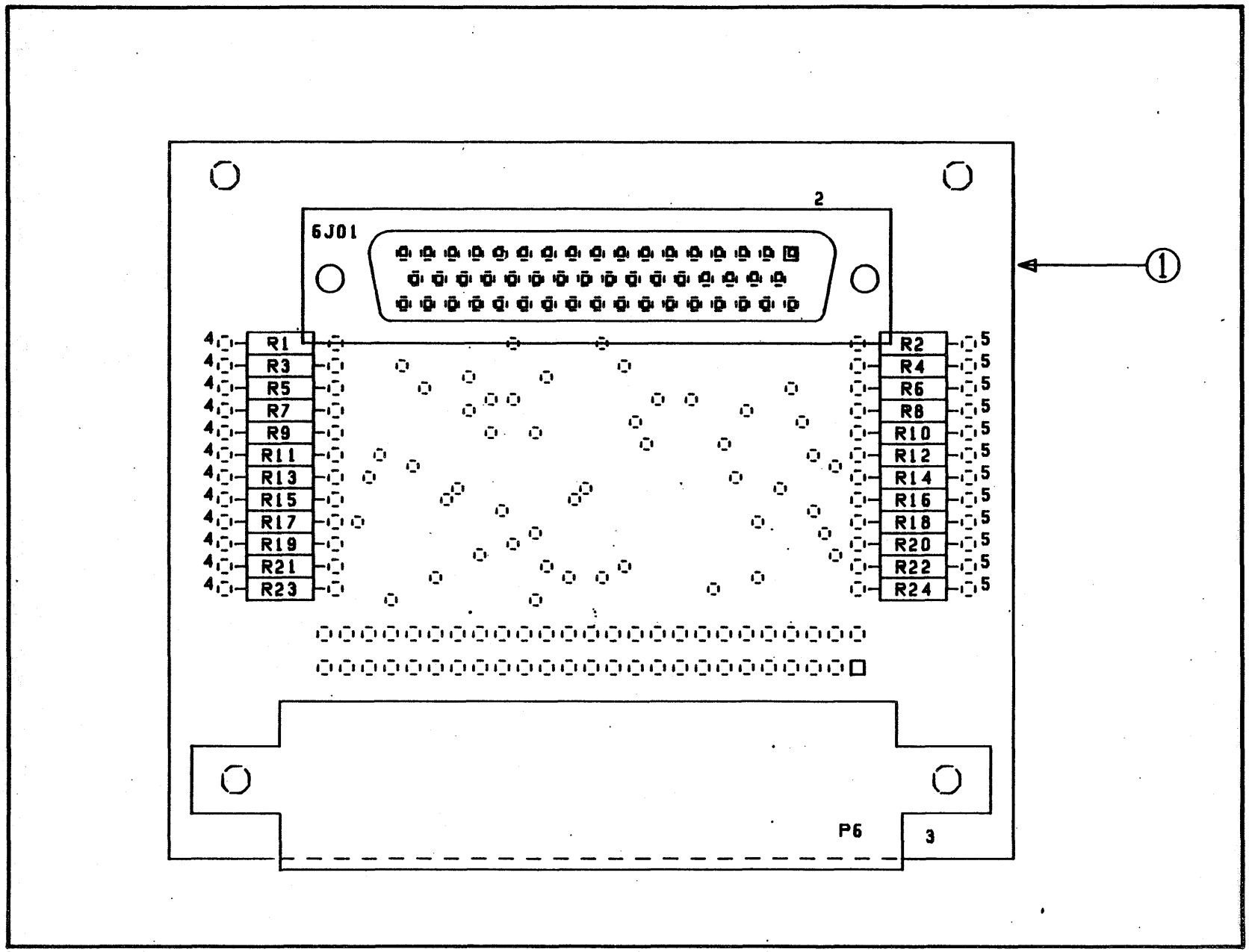

I/O ADAPTOR - D TYPE, SHORT LINE

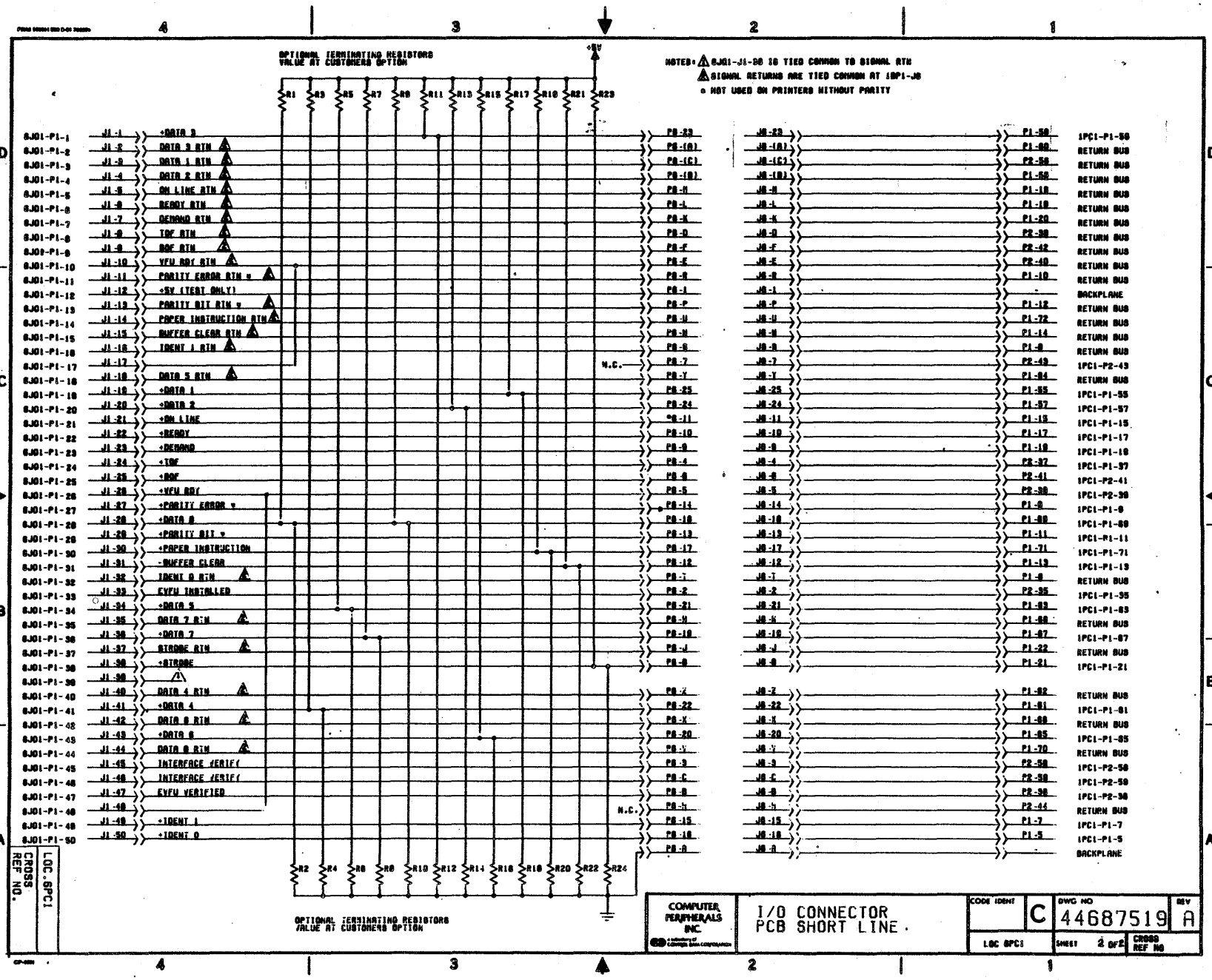
OPTIONAL TERMINATING RESISTORS VALUE AT CUSTOMERS OPTION
+5V
R1 R3 R5 R7 R9 R11 R13 R15 R17 R19 R21 R23
NOTES: 1. 6J01-J1-B8 IS TIED COMMON TO SIGNAL RTN
2. SIGNAL RETURNS ARE TIED COMMON AT 1DP1-J8
3. NOT USED ON PRINTERS WITHOUT PARITY
6J01-P1-1 J1-1 +DATA 3 P8-23 J8-23 P1-50 1PC1-P1-50
6J01-P1-2 J1-2 DATA 3 RTN P8-(A) J8-(A) P1-49 RETURN BUS
6J01-P1-3 J1-3 DATA 1 RTN P8-(C) J8-(C) P2-50 RETURN BUS
6J01-P1-4 J1-4 DATA 2 RTN P8-(B) J8-(B) P1-50 RETURN BUS
6J01-P1-5 J1-5 ON LINE RTN P8-M J8-M P1-18 RETURN BUS
6J01-P1-6 J1-6 READY RTN P8-L J8-L P1-19 RETURN BUS
6J01-P1-7 J1-7 DEMAND RTN P8-K J8-K P1-20 RETURN BUS
6J01-P1-8 J1-8 TOF RTN P8-D J8-D P2-38 RETURN BUS
6J01-P1-9 J1-9 BOF RTN P8-F J8-F P2-42 RETURN BUS
6J01-P1-10 J1-10 VFU RDY RTN P8-E J8-E P2-40 RETURN BUS
6J01-P1-11 J1-11 PARITY ERROR RTN 2 P8-R J8-R P1-10 RETURN BUS
6J01-P1-12 J1-12 +5V (TEST ONLY) P8-J J8-J - BACKPLANE
6J01-P1-13 J1-13 PARITY BIT RTN 2 P8-P J8-P P1-12 RETURN BUS
6J01-P1-14 J1-14 PAPER INSTRUCTION RTN P8-U J8-U P1-72 RETURN BUS
6J01-P1-15 J1-15 BUFFER CLEAR RTN P8-N J8-N P1-14 RETURN BUS
6J01-P1-16 J1-16 IDENT 1 RTN P8-S J8-S P1-9 RETURN BUS
6J01-P1-17 J1-17 P8-7 N.C. J8-7 P2-49 1PC1-P2-49
6J01-P1-18 J1-18 DATA 5 RTN P8-Y J8-Y P1-84 RETURN BUS
6J01-P1-19 J1-19 +DATA 1 P8-25 J8-25 P1-55 1PC1-P1-55
6J01-P1-20 J1-20 +DATA 2 P8-24 J8-24 P1-57 1PC1-P1-57
6J01-P1-21 J1-21 +ON LINE P8-11 J8-11 P1-15 1PC1-P1-15
6J01-P1-22 J1-22 +READY P8-10 J8-10 P1-17 1PC1-P1-17
6J01-P1-23 J1-23 +DEMAND P8-9 J8-9 P1-18 1PC1-P1-18
6J01-P1-24 J1-24 +TOF P8-4 J8-4 P2-37 1PC1-P2-37
6J01-P1-25 J1-25 +BOF P8-6 J8-6 P2-41 1PC1-P2-41
6J01-P1-26 J1-26 +VFU RDY P8-5 J8-5 P2-39 1PC1-P2-39
6J01-P1-27 J1-27 +PARITY ERROR 2 P8-14 J8-14 P1-9 1PC1-P1-9
6J01-P1-28 J1-28 +DATA 0 P8-16 J8-16 P1-50 1PC1-P1-50
6J01-P1-29 J1-29 +PARITY BIT 2 P8-13 J8-13 P1-11 1PC1-P1-11
6J01-P1-30 J1-30 +PAPER INSTRUCTION P8-17 J8-17 P1-71 1PC1-P1-71
6J01-P1-31 J1-31 -BUFFER CLEAR P8-12 J8-12 P1-13 1PC1-P1-13
6J01-P1-32 J1-32 IDENT 0 RTN P8-T J8-T P1-8 RETURN BUS
6J01-P1-33 J1-33 EVFU INSTALLED P8-2 J8-2 P2-35 1PC1-P1-35
6J01-P1-34 J1-34 +DATA 5 P8-21 J8-21 P1-83 1PC1-P1-83
6J01-P1-35 J1-35 DATA 7 RTN P8-H J8-H P1-68 RETURN BUS
6J01-P1-36 J1-36 +DATA 7 P8-10 J8-10 P1-67 1PC1-P1-67
6J01-P1-37 J1-37 STROBE RTN P8-J J8-J P1-22 RETURN BUS
6J01-P1-38 J1-38 +STROBE P8-8 J8-8 P1-21 1PC1-P1-21
6J01-P1-39 J1-39 1
6J01-P1-40 J1-40 DATA 4 RTN P8-Z J8-Z P1-82 RETURN BUS
6J01-P1-41 J1-41 +DATA 4 P8-22 J8-22 P1-81 1PC1-P1-81
6J01-P1-42 J1-42 DATA 6 RTN P8-X J8-X P1-80 RETURN BUS
6J01-P1-43 J1-43 +DATA 6 P8-20 J8-20 P1-85 1PC1-P1-85
6J01-P1-44 J1-44 DATA 8 RTN P8-V J8-V P1-70 RETURN BUS
6J01-P1-45 J1-45 INTERFACE VERIFY P8-9 J8-9 P2-58 1PC1-P2-58
6J01-P1-46 J1-46 INTERFACE VERIFY P8-C J8-C P2-59 1PC1-P2-59
6J01-P1-47 J1-47 EVFU VERIFIED P8-8 J8-8 P2-36 1PC1-P2-36
6J01-P1-48 J1-48 P8-h N.C. J8-h P2-44 RETURN BUS
6J01-P1-49 J1-49 +IDENT 1 P8-15 J8-15 P1-7 1PC1-P1-7
6J01-P1-50 J1-50 +IDENT 0 P8-18 J8-18 P1-5 1PC1-P1-5
P8-A J8-A - BACKPLANE
R2 R4 R6 R8 R10 R12 R14 R16 R18 R20 R22 R24
OPTIONAL TERMINATING RESISTORS VALUE AT CUSTOMERS OPTION
CROSS REF NO.
LOC. 6PC1
COMPUTER PERIPHERALS INC
I/O CONNECTOR PCB SHORT LINE.
CODE IDENT C
DWG NO 44687519
REV A
LOC 6PC1
SHEET 2 OF 2
CROSS REF NO

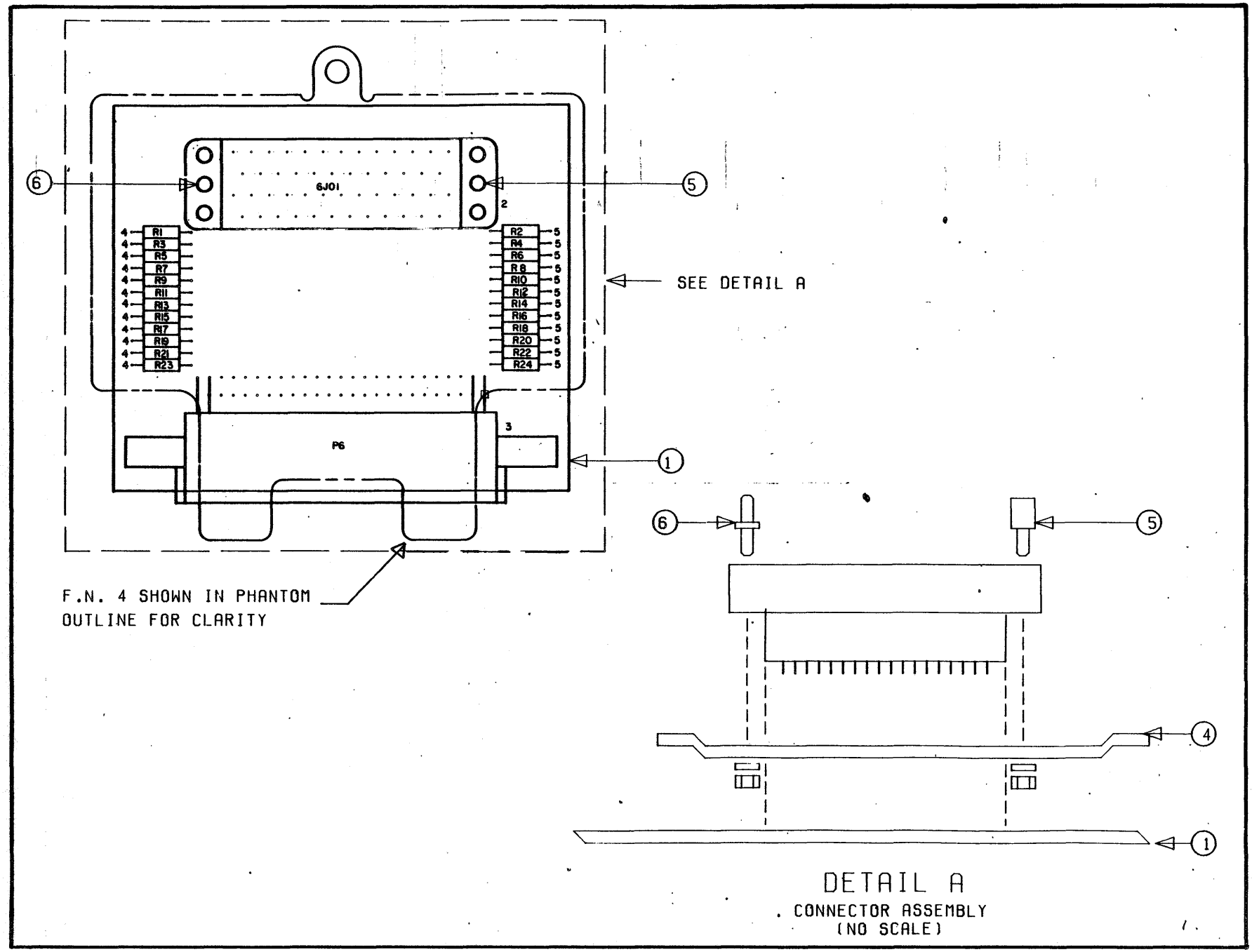

I/O ADAPTOR - WINCHESTER TYPE, SHORT LINE

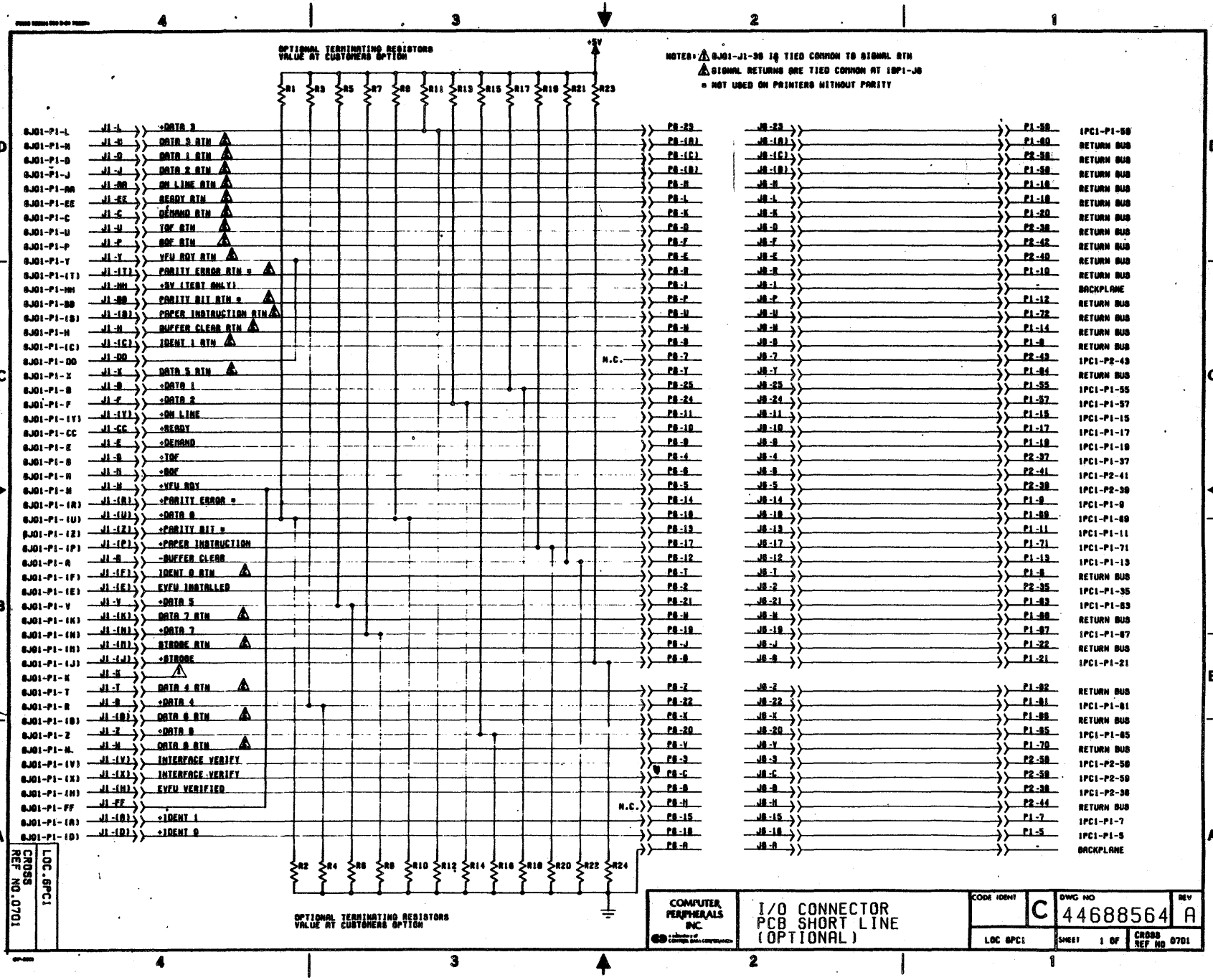
OPTIONAL TERMINATING RESISTORS
VALUE AT CUSTOMERS OPTION
+5V
R1 R3 R5 R7 R9 R11 R13 R15 R17 R19 R21 R23
NOTES: 1 6J01-J1-36 IS TIED COMMON TO SIGNAL RTN
2 SIGNAL RETURNS ARE TIED COMMON AT 1BP1-J6
* NOT USED ON PRINTERS WITHOUT PARITY
6J01-P1-L J1-L +DATA 3 P8-29 J6-29 P1-50 1PC1-P1-50
6J01-P1-N J1-N DATA 3 RTN P8-(A) J6-(A) P1-40 RETURN BUS
6J01-P1-D J1-D DATA 1 RTN P8-(C) J6-(C) P2-50 RETURN BUS
6J01-P1-J J1-J DATA 2 RTN P8-(B) J6-(B) P1-50 RETURN BUS
6J01-P1-AA J1-AA ON LINE RTN P8-M J6-M P1-10 RETURN BUS
6J01-P1-EE J1-EE READY RTN P8-L J6-L P1-10 RETURN BUS
6J01-P1-C J1-C DEMAND RTN P8-K J6-K P1-20 RETURN BUS
6J01-P1-U J1-U TOF RTN P8-D J6-D P2-30 RETURN BUS
6J01-P1-P J1-P BOF RTN P8-F J6-F P2-42 RETURN BUS
6J01-P1-Y J1-Y VFU RDY RTN P8-E J6-E P2-40 RETURN BUS
6J01-P1-(T) J1-(T) PARITY ERROR RTN * P8-R J6-R P1-10 RETURN BUS
6J01-P1-HH J1-HH +5V (TEST ONLY) P8-1 J6-1 - BACKPLANE
6J01-P1-BB J1-BB PARITY BIT RTN * P8-P J6-P P1-12 RETURN BUS
6J01-P1-(S) J1-(S) PAPER INSTRUCTION RTN P8-U J6-U P1-72 RETURN BUS
6J01-P1-H J1-H BUFFER CLEAR RTN P8-N J6-N P1-14 RETURN BUS
6J01-P1-(C) J1-(C) IDENT 1 RTN P8-9 J6-9 P1-9 RETURN BUS
6J01-P1-DD J1-DD P8-7 N.C. J6-7 P2-43 1PC1-P2-43
6J01-P1-X J1-X DATA 5 RTN P8-Y J6-Y P1-84 RETURN BUS
6J01-P1-B J1-B +DATA 1 P8-25 J6-25 P1-55 1PC1-P1-55
6J01-P1-F J1-F +DATA 2 P8-24 J6-24 P1-57 1PC1-P1-57
6J01-P1-(Y) J1-(Y) +ON LINE P8-11 J6-11 P1-15 1PC1-P1-15
6J01-P1-CC J1-CC +READY P8-10 J6-10 P1-17 1PC1-P1-17
6J01-P1-E J1-E +DEMAND P8-9 J6-9 P1-19 1PC1-P1-19
6J01-P1-S J1-S +TOF P8-4 J6-4 P2-37 1PC1-P1-37
6J01-P1-R J1-R +BOF P8-6 J6-6 P2-41 1PC1-P2-41
6J01-P1-W J1-W +VFU RDY P8-5 J6-5 P2-39 1PC1-P2-39
6J01-P1-(R) J1-(R) +PARITY ERROR * P8-14 J6-14 P1-8 1PC1-P1-8
6J01-P1-(U) J1-(U) +DATA 0 P8-18 J6-18 P1-89 1PC1-P1-89
6J01-P1-(Z) J1-(Z) +PARITY BIT * P8-13 J6-13 P1-11 1PC1-P1-11
6J01-P1-(P) J1-(P) +PAPER INSTRUCTION P8-17 J6-17 P1-71 1PC1-P1-71
6J01-P1-A J1-A -BUFFER CLEAR P8-12 J6-12 P1-13 1PC1-P1-13
6J01-P1-(F) J1-(F) IDENT 0 RTN P8-T J6-T P1-8 RETURN BUS
6J01-P1-(E) J1-(E) EVFU INSTALLED P8-2 J6-2 P2-35 1PC1-P1-35
6J01-P1-V J1-V +DATA 5 P8-21 J6-21 P1-83 1PC1-P1-83
6J01-P1-(K) J1-(K) DATA 7 RTN P8-W J6-W P1-88 RETURN BUS
6J01-P1-(N) J1-(N) +DATA 7 P8-19 J6-19 P1-87 1PC1-P1-87
6J01-P1-(N) J1-(N) STROBE RTN P8-J J6-J P1-22 RETURN BUS
6J01-P1-(J) J1-(J) +STROBE P8-8 J6-8 P1-21 1PC1-P1-21
6J01-P1-K J1-K
6J01-P1-T J1-T DATA 4 RTN P8-Z J6-Z P1-82 RETURN BUS
6J01-P1-R J1-R +DATA 4 P8-22 J6-22 P1-81 1PC1-P1-81
6J01-P1-(B) J1-(B) DATA 6 RTN P8-K J6-K P1-86 RETURN BUS
6J01-P1-Z J1-Z +DATA 6 P8-20 J6-20 P1-85 1PC1-P1-85
6J01-P1-N. J1-N DATA 8 RTN P8-V J6-V P1-70 RETURN BUS
6J01-P1-(V) J1-(V) INTERFACE VERIFY P8-3 J6-3 P2-58 1PC1-P2-58
6J01-P1-(X) J1-(X) INTERFACE VERIFY P8-C J6-C P2-59 1PC1-P2-59
6J01-P1-(H) J1-(H) EVFU VERIFIED P8-8 J6-8 P2-36 1PC1-P2-36
6J01-P1-FF J1-FF P8-H N.C. J6-H P2-44 RETURN BUS
6J01-P1-(A) J1-(A) +IDENT 1 P8-15 J6-15 P1-7 1PC1-P1-7
6J01-P1-(D) J1-(D) +IDENT 0 P8-16 J6-16 P1-5 1PC1-P1-5
P8-A J6-A - BACKPLANE
R2 R4 R6 R8 R10 R12 R14 R16 R18 R20 R22 R24
OPTIONAL TERMINATING RESISTORS
VALUE AT CUSTOMERS OPTION
CROSS REF NO. 0701
LOC. 6PC1
COMPUTER PERIPHERALS INC.
I/O CONNECTOR
PCB SHORT LINE
(OPTIONAL)
CODE IDENT C
DWG NO 44688564
REV A
LOC 6PC1
SHEET 1 OF
CROSS REF NO 0701

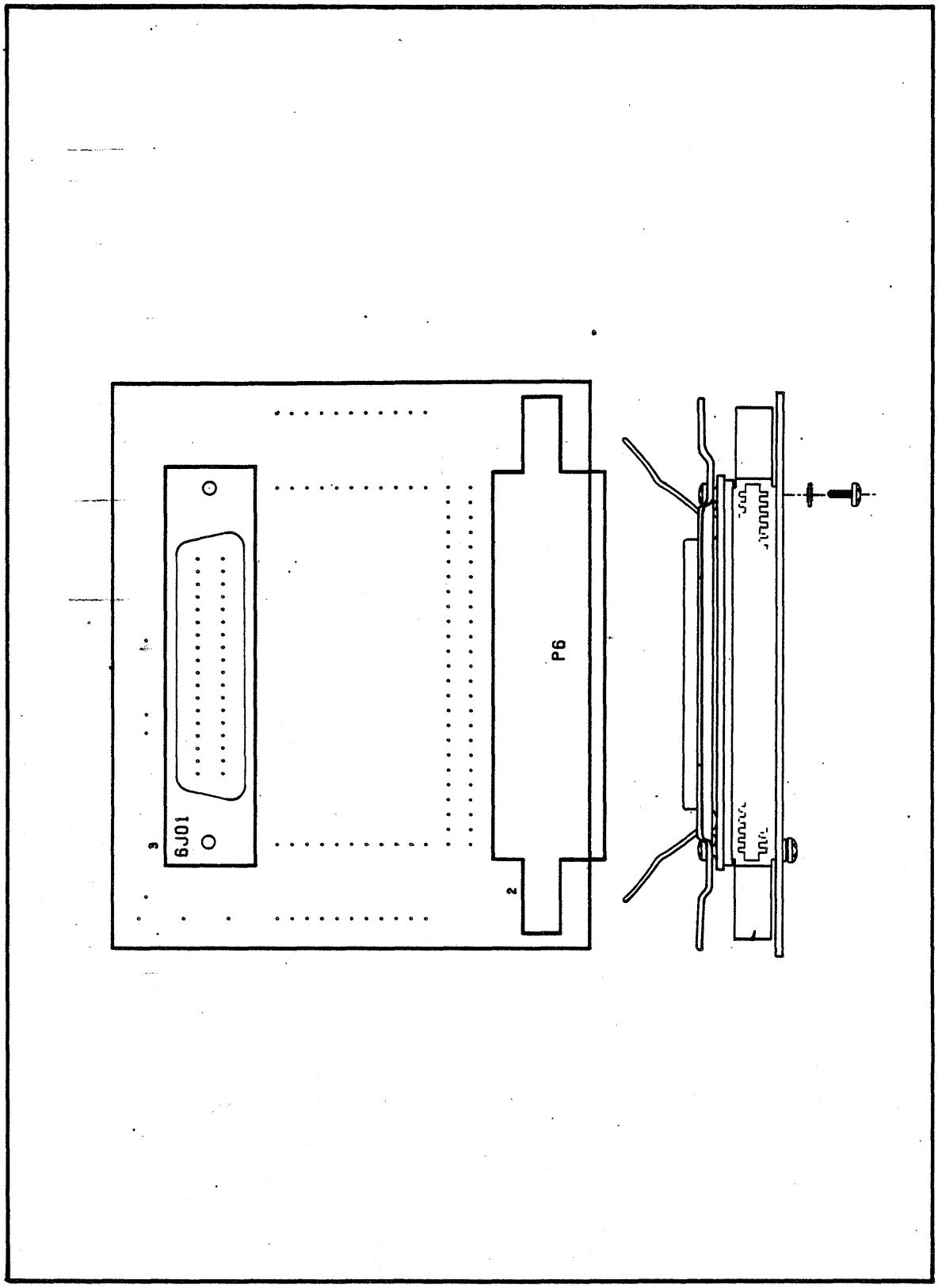

I/O ADAPTOR - CENTRONICS

CROSS REF. NO.:	0700	PART NO:	44690609
MODULE LOC:	6PC1	REV:	A
SCHEMATIC NO:	44690608	DATE:	8-2-83
		PAGE:	2 of 3

LOGIC SIGNAL CROSS REF. DETACHED LIST

MODULE INPUTS

SOURCE	SIGNAL NAME	MODULE CROSS REF. NO.
0100/1PC1	-ACKNOWLEDGE	0701/J6-9
	RTN	0701/J6-K
0100/1PC1	+BUSY	0701/J6-15
	RTN	0701/J6-S
0100/1PC1	+OUT OF PAPER	0701/J6-10
0100/1PC1	+SELECT	0701/J6-11
0100/1PC1	125 KHZ CLK	0701/J6-12
0100/1PC1	-FAULT	0701/J6-16
0100/1PC1	+COMPRESSED PITCH	0701/J6-14
	RTN	0701/J6-R
	+5V	0701/J6-1
	GND	0701/J6-A
	GND	0701/J6-D
	GND	0701/J6-E
	GND	0701/J6-F
	GND	0701/J6-H
	GND	0701/J6-L
	GND	0701/J6-M
	GND	0701/J6-N
	GND	0701/J6-T

CROSS REF. NO.:	0700	PART NO:	44690609
MODULE LOC:	6PC1	REV:	A
SCHEMATIC NO:	44690608	DATE:	8-2-83
		PAGE:	3 of 3

LOGIC SIGNAL CROSS REF. DETACHED LIST

MODULE OUTPUTS

MODULE CROSS REF. NO.	SIGNAL NAME	DESTINATION
0701/J6-8	-DATA STROBE	0800/1PC1
0701/J6-J	RTN	
0701/J6-25	+DATA BIT 1	0800/1PC1
0701/J6-(C)	RTN	
0701/J6-24	+DATA BIT 2	0800/1PC1
0701/J6-(B)	RTN	
0701/J6-23	+DATA BIT 3	0800/1PC1
0701/J6-(A)	RTN	
0701/J6-22	+DATA BIT 4	0800/1PC1
0701/J6-Z	RTN	
0701/J6-21	+DATA BIT 5	0800/1PC1
0701/J6-Y	RTN	
0701/J6-20	+DATA BIT 6	0800/1PC1
0701/J6-X	RTN	
0701/J6-19	+DATA BIT 7	0800/1PC1
0701/J6-W	RTN	
0701/J6-18	+DATA BIT 8	0800/1PC1
0701/J6-V	RTN	
0701/J6-13	+PARITY BIT	0800/1PC1
0701/J6-P	RTN	
0701/J6-17	-INPUT PRIME	0800/1PC1
0701/J6-U	RTN	

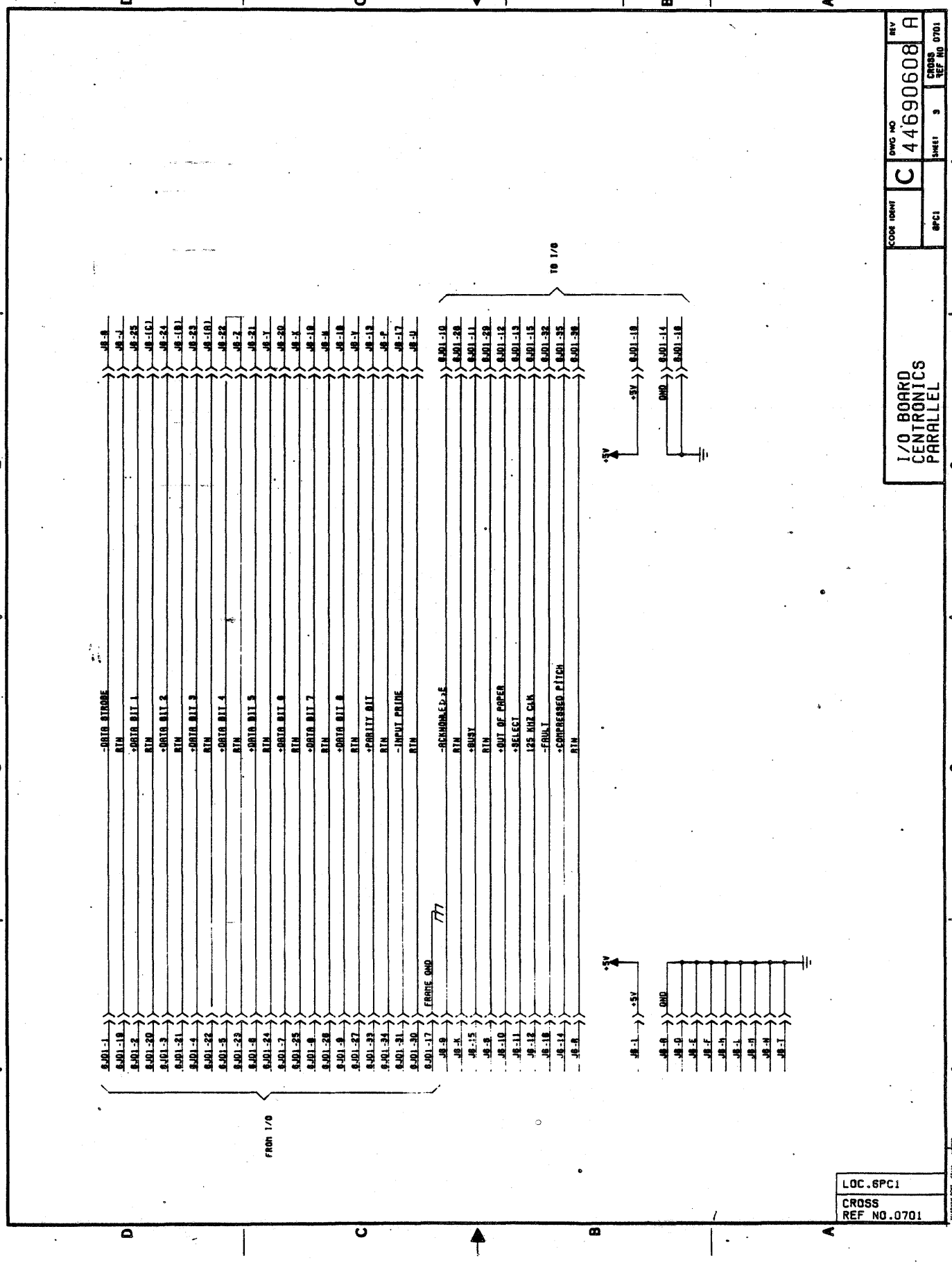
4469608
I/O BOARD
CENTRONICS
PARALLEL
C
4469608
A
SHEET 3
CROSS REF NO 0701
LOC.6PC1
CROSS
REF NO.0701
FROM I/O
TO I/O
-DATA STROBE
+DATA BIT 1
+DATA BIT 2
+DATA BIT 3
+DATA BIT 4
+DATA BIT 5
+DATA BIT 6
+DATA BIT 7
+DATA BIT 8
+PARITY BIT
-INPUT PRIME
FRAME GND
-ACKNOWLEDGE
+BUSY
+OUT OF PAPER
+SELECT
125 KHZ CLK
-FAULT
+COMPRESSED PITCH
+5V
GND

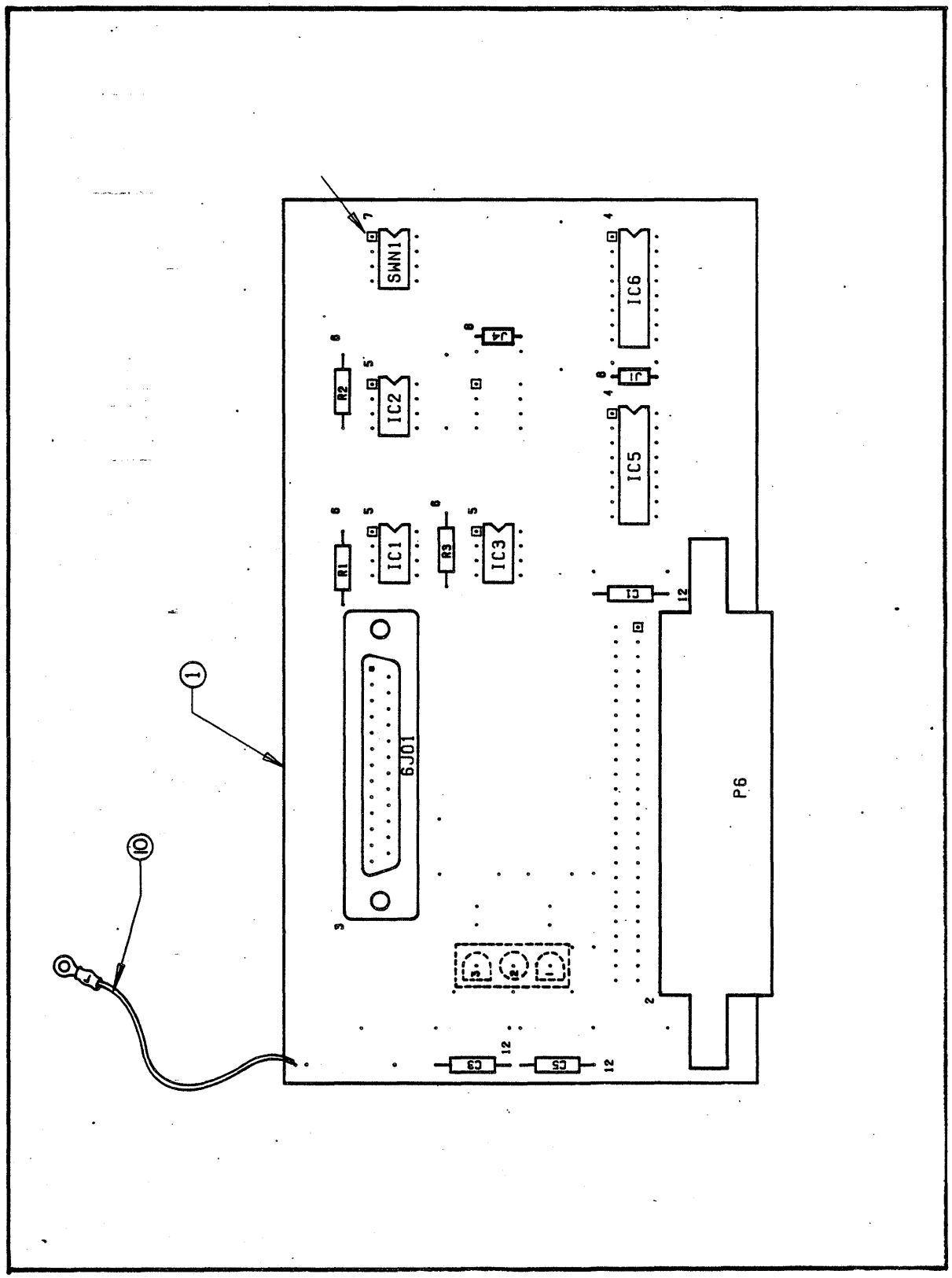

I/O ADAPTOR - RS-232

CROSS REF NO: 0700
MODULE LOC: 6PC1
SCHEMATIC NO: 44689765

PART NO: 44689766
REV: A
DATE: 11-2-82
SHT: 2

LOGIC SIGNAL CROSS REF: DETACHED LIST

MODULE INPUTS

SOURCE	SIGNAL NAME	MODULE CROSS REF NO.
0800/1PC1	+T DATA	0701/P6-4
0800/1PC1	-RTS	0701/P6-B
0800/1PC1	-TEST OUT	0701/P6-21
0800/1PC1	-DTR	0701/P6-2
0800/1PC1	-REV CHAN	0701/P6-3
0800/1PC1	-LOCAL LBK	0701/P6-20
0800/1PC1	-REM LBK	0701/P6-24
0600/1PC6	+5V	0701/P6-1
0600/1PC6	GND	0701/P6-A
0800/1PC1	+VPWR	0702/P6-19
0800/1PC1	GND	0701/P6-C THRU P6-Z
0800/1PC1	GND	0701/P6-(A)
0800/1PC1	GND	0701/P6-(B)
0800/1PC1	GND	0701/P6-(C)
	+12 VDC	0702/P3-1
	COMMON	0702/P3-2
	-12 VDC	0702/P3-3

CROSS REF NO: 0700
MODULE LOC: 6PC1
SCHEMATIC NO: 44689765

PART NO: 44689766
REV: A
DATE: 11-2-82
SHT: 3

LOGIC SIGNAL CROSS REF: DETACHED LIST

MODULE OUTPUTS

MODULE CROSS REF: NO:	SIGNAL NAME	DESTINATION
0701/P6-8	+RXD	0800/1PC1
0701/P6-5	-R SET IN	0800/1PC1
0701/P6-11	-CTS	0800/1PC1
0701/P6-6	-T SET IN	0800/1PC1
0701/P6-10	-RLS	0800/1PC1
0701/P6-9	-DSR	0800/1PC1
0701/P6-13	-RING	0800/1PC1
0701/P6-12	-TEST	0800/1PC1

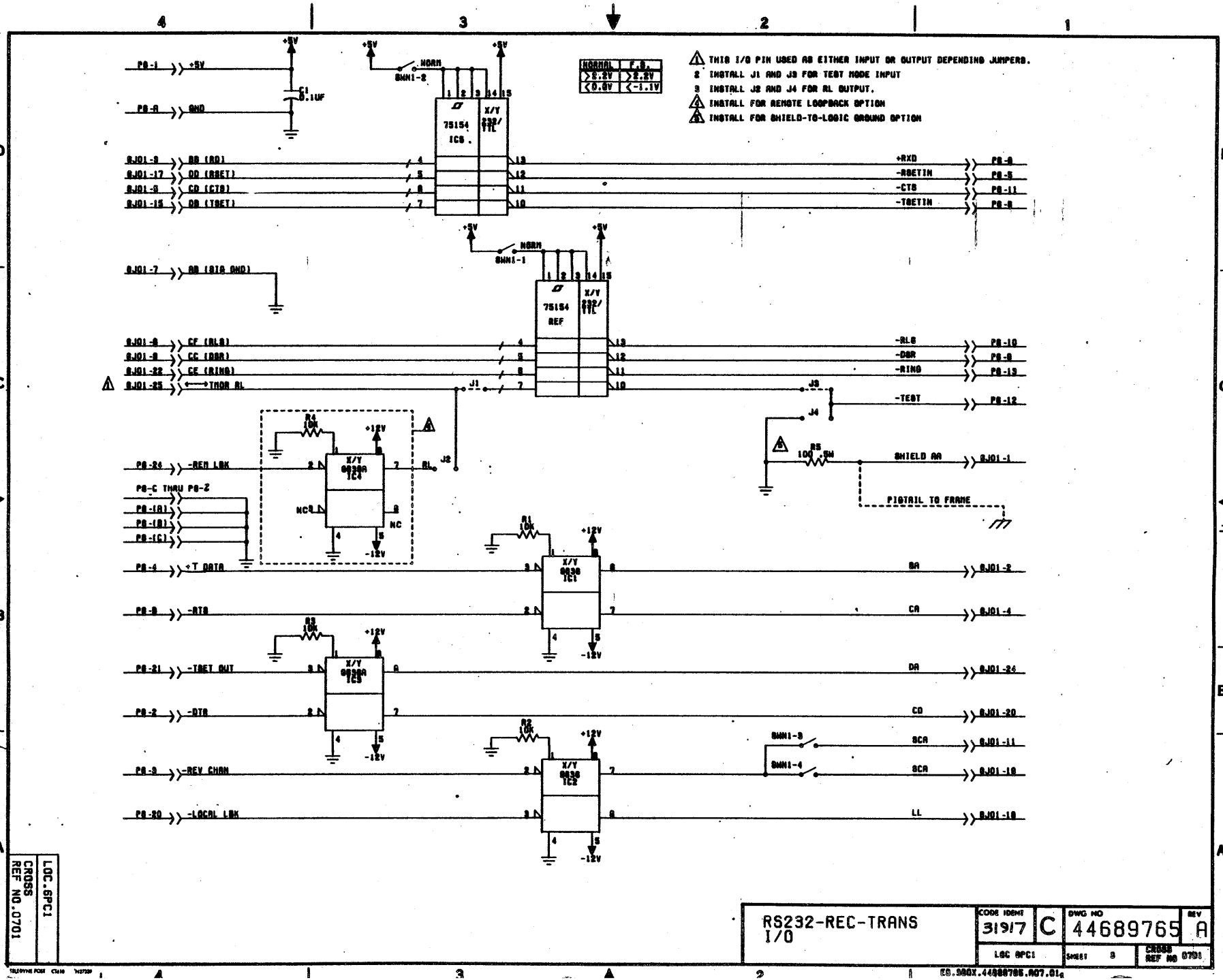

NORMAL | F.S.
>2.2V | >2.2V
<0.8V | <-1.1V
1 THIS I/O PIN USED AS EITHER INPUT OR OUTPUT DEPENDING JUMPERS.
2 INSTALL J1 AND J3 FOR TEST MODE INPUT
3 INSTALL J2 AND J4 FOR RL OUTPUT.
4 INSTALL FOR REMOTE LOOPBACK OPTION
5 INSTALL FOR SHIELD-TO-LOGIC GROUND OPTION
PS-1 +5V
PS-A GND
C1 0.1UF
SWN1-2 NORM
75154 IC5
X/Y 232/TTL
GJ01-3 BB (RD)
GJ01-17 DD (RSET)
GJ01-5 CD (CTS)
GJ01-15 DB (TSET)
+RXD PS-8
-RSETIN PS-5
-CTS PS-11
-TSETIN PS-8
SWN1-1 NORM
75154 REF
GJ01-7 AB (SIG GND)
GJ01-6 CF (RLS)
GJ01-8 CC (DSR)
GJ01-22 CE (RING)
GJ01-25 TMOR RL
-RLS PS-10
-DSR PS-9
-RING PS-13
-TEST PS-12
J1
J2
J3
J4
R4 10K
X/Y 9838A IC4
NC
RL
PS-24 -REM LBK
PS-C THRU PS-Z
PS-(A)
PS-(B)
PS-(C)
R5 100 .5W
SHIELD AA GJ01-1
PIGTAIL TO FRAME
R1 10K
X/Y 9838 IC1
PS-4 +T DATA
PS-8 -RTS
BA GJ01-2
CA GJ01-4
R3 10K
X/Y 9838A IC3
PS-21 -TSET OUT
PS-2 -DTR
DA GJ01-24
CD GJ01-20
R2 10K
X/Y 9838 IC2
PS-3 -REV CHAN
PS-20 -LOCAL LBK
SWN1-3
SWN1-4
SCA GJ01-11
SCA GJ01-10
LL GJ01-18
+12V
-12V
LOC.6PC1
CROSS REF NO.0701
RS232-REC-TRANS I/O
CODE IDENT 31917
C
DWG NO 44689765
REV A
LOC 6PC1
SHEET 3
CROSS REF NO 0701
44689765

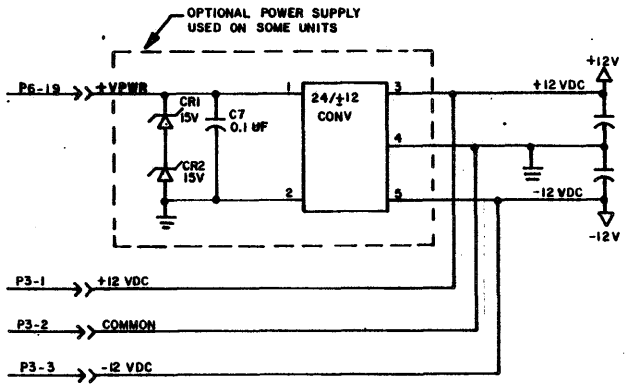

CROSS REF NO. 0702

LOC. 6PC1

RS232-REC-TRANS I/O	CODE IDENT 31917	C	DWG NO 44689765	REV A
	LOC. 6PC1		SHEET 4	CROSS REF NO. 0702

11-79/11-80

44689765

ARTWORK NOT AVAILABLE AT TIME OF PRINTING

I/O ADAPTOR - RS-422/RS-423

CROSS REF NO: 0700
MODULE LOC: 6PC1
SCHEMATIC NO: 44689773

PART NO: 44689774
REV: A
DATE: 11-2-82
SHT: 2

LOGIC SIGNAL CROSS REF. DETACHED LIST

MODULE INPUTS

SOURCE	SIGNAL NAME	MODULE CROSS REF NO.
0800/1PC1	-DTR	0701/P6-2
0800/1PC1	+TDATA	0701/P6-4
0800/1PC1	-T SET OUT	0701/P6-21
0800/1PC1	-RTS	0701/P6-8
0800/1PC1	-LOCAL LBK	0702/P6-20
0800/1PC1	-REM LBK	0702/P6-24
0800/1PC1	REV CHAN	0702/P6-3
0600/1PC6	+5V	0703/P6-1
0600/1PC6	GND	0703/P6-A
0800/1PC1	GND	0703/P6-C THRU P6-Z
0800/1PC1	GND	0703/P6-(A)
0800/1PC1	GND	0703/P6-(B)
0800/1PC1	GND	0703/P6-(C)
1100/4PC2	+12V	0703/P3-1
1100/4PC2	COMMON	0703/P3-2
1100/4PC2	-12V	0703/P3-3

CROSS REF NO: 0700
MODULE LOC: 6PC1
SCHEMATIC NO: 44689773

PART NO: 44689774
REV: A
DATE: 11-2-82
SHT: 3

LOGIC SIGNAL CROSS REF. DETACHED LIST

MODULE OUTPUTS

MODULE CROSS REF. NO.	SIGNAL NAME	DESTINATION
0703/P6-8	+RXD	0800/1PC1
0703/P6-5	-R SET IN	0800/1PC1
0703/P6-11	-CTS	0800/1PC1
0703/P6-6	-T SET IN	0800/1PC1
0703/P6-10	-RLS	0800/1PC1
0703/P6-9	-DSR	0800/1PC1
0703/P6-13	-RING	0800/1PC1
0703/P6-12	-TEST	0800/1PC1

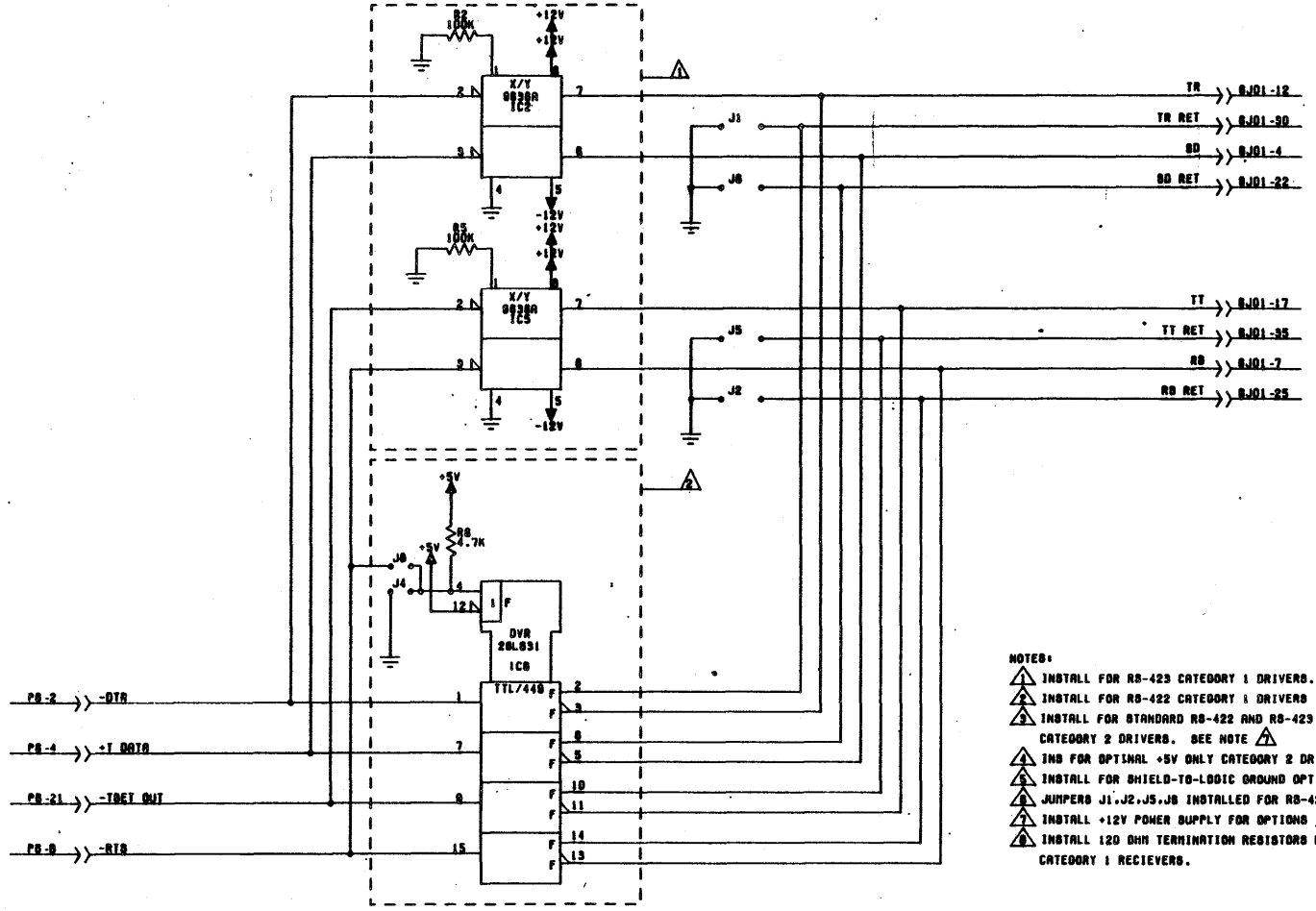

NOTES:

1. INSTALL FOR RS-423 CATEGORY 1 DRIVERS. SEE NOTE 1
2. INSTALL FOR RS-422 CATEGORY 1 DRIVERS
3. INSTALL FOR STANDARD RS-422 AND RS-423 CATEGORY 2 DRIVERS. SEE NOTE 1
4. INS FOR OPTIONAL +5V ONLY CATEGORY 2 DRIVERS
5. INSTALL FOR SHIELD-TO-LOGIC GROUND OPTION
6. JUMPERS J1,J2,J5,J6 INSTALLED FOR RS-423 CATEGORY 1 DRIVERS.
7. INSTALL +12V POWER SUPPLY FOR OPTIONS 1 AND 2 ABOVE
8. INSTALL 120 OHM TERMINATION RESISTORS FOR RS-422 CATEGORY 1 RECIEVERS.

CROSS REF NO.0701

LOC.6PC1

RS449 REC/TRANS I/O

CODE IDENT	DWG NO	REV
C	44689773	A
LOC 6PC1	SHEET 9	CROSS REF NO 0701

E8.980X.44689773.R07.01

44689773

11-84

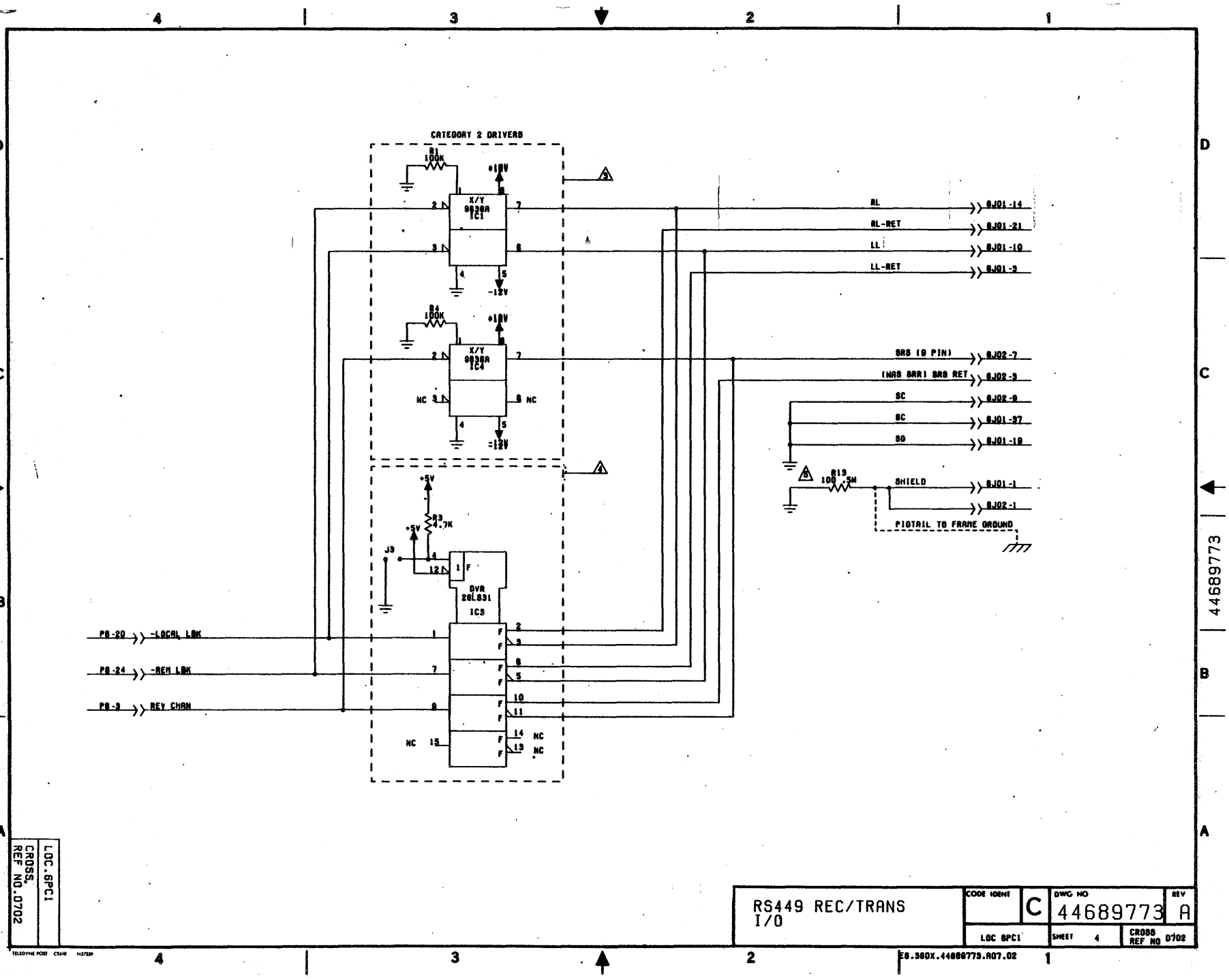
CATEGORY 2 DRIVERS
R1 100K
+10V
X/Y 9638A IC1
-12V
R4 100K
X/Y 9638A IC4
NC
+5V
R3 4.7K
J3
DVR 26LS31 IC3
PB-20 -LOCAL LBK
PB-24 -REM LBK
PB-3 REV CHAN
RL
RL-RET
LL
LL-RET
SRS (9 PIN)
(WAS SRR) SRS RET
SC
SD
R13 100 .5W
SHIELD
PIGTAIL TO FRAME GROUND
LOC.6PC1
CROSS, REF NO.0702
RS449 REC/TRANS I/O
CODE IDENT
C
DWG NO 44689773
REV A
LOC 6PC1
SHEET 4
CROSS REF NO 0702
ES.360X.44689773.A07.02
44689773

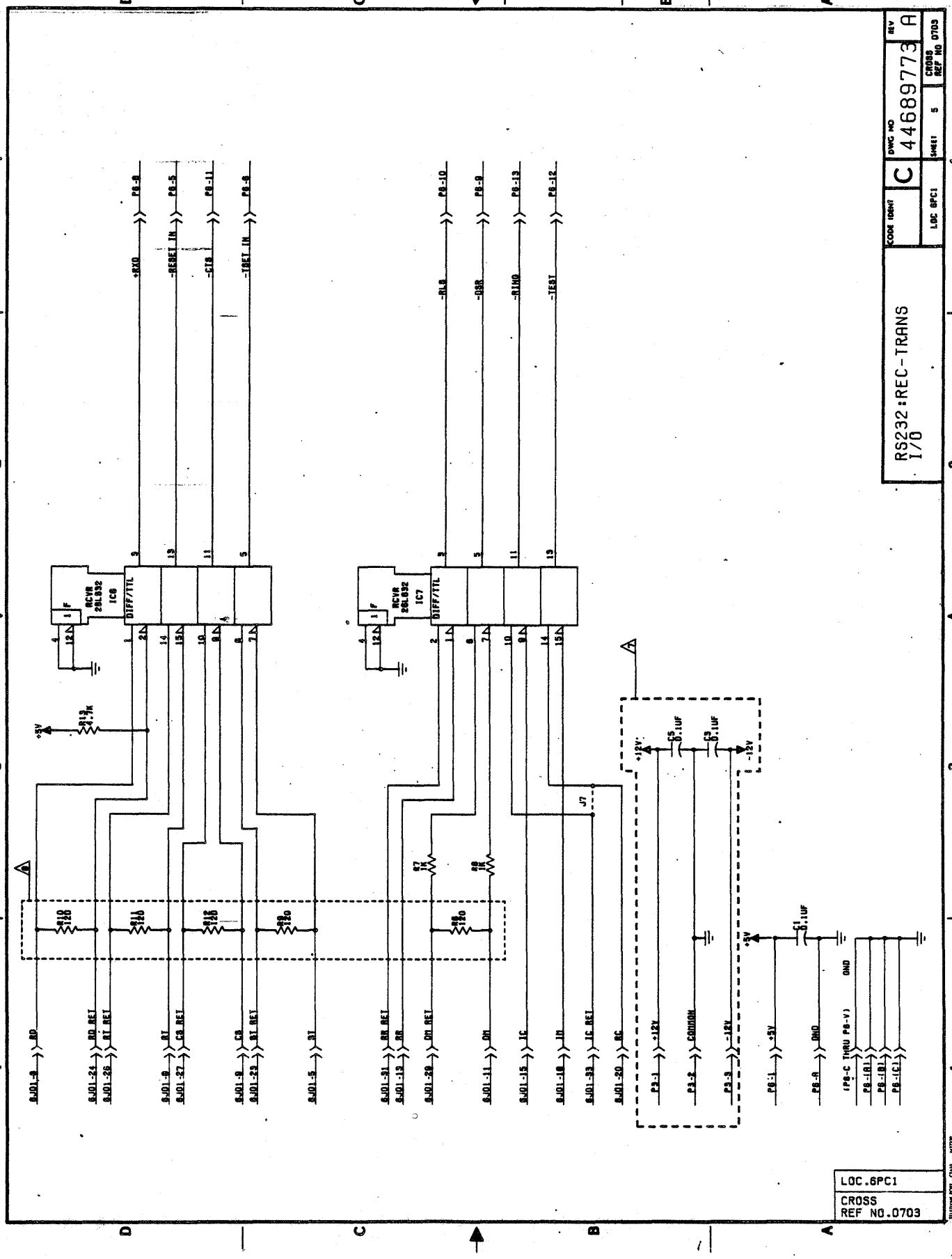
44689773
RS232:REC-TRANS
I/O
CODE IDENT
C
DWG NO
44689773
REV
A
SHEET 5
CROSS REF NO 0703
LOC 6PC1
LOC.6PC1
CROSS
REF NO.0703
RCVR 28L832 IC6
RCVR 28L832 IC7
DIFF/TTL
+RXD
-RESET IN
-CTS
-TSET IN
-RLS
-DSR
-RING
-TEST
+5V
+12V
-12V
COMMON
GND
J7

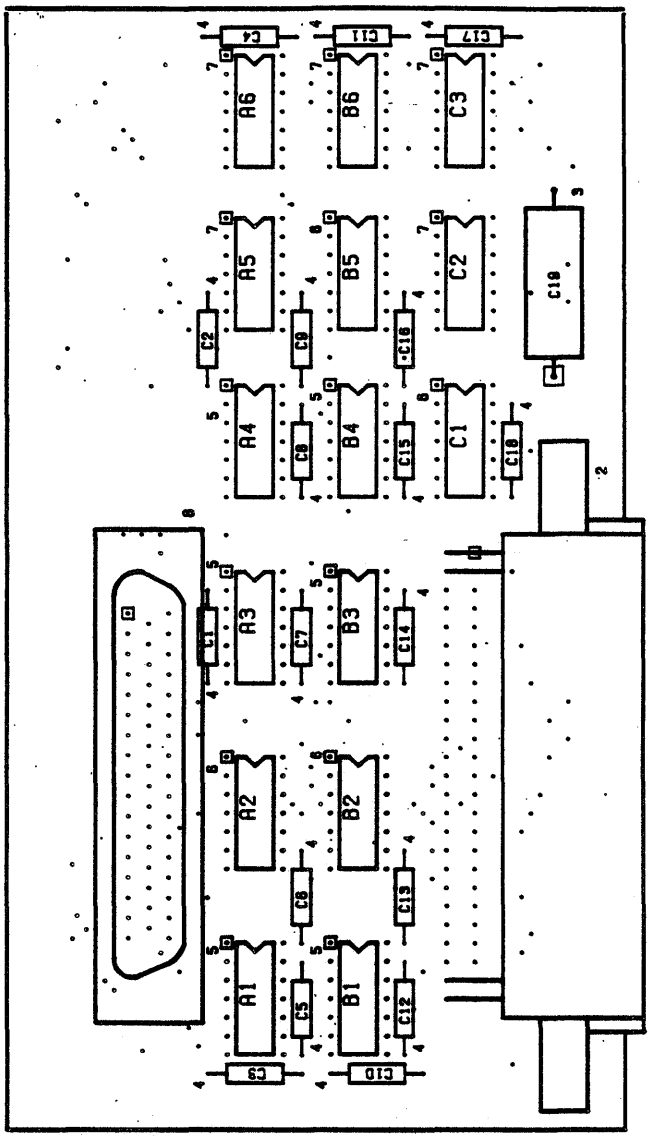

I/O ADAPTOR - D TYPE, LONG LINE

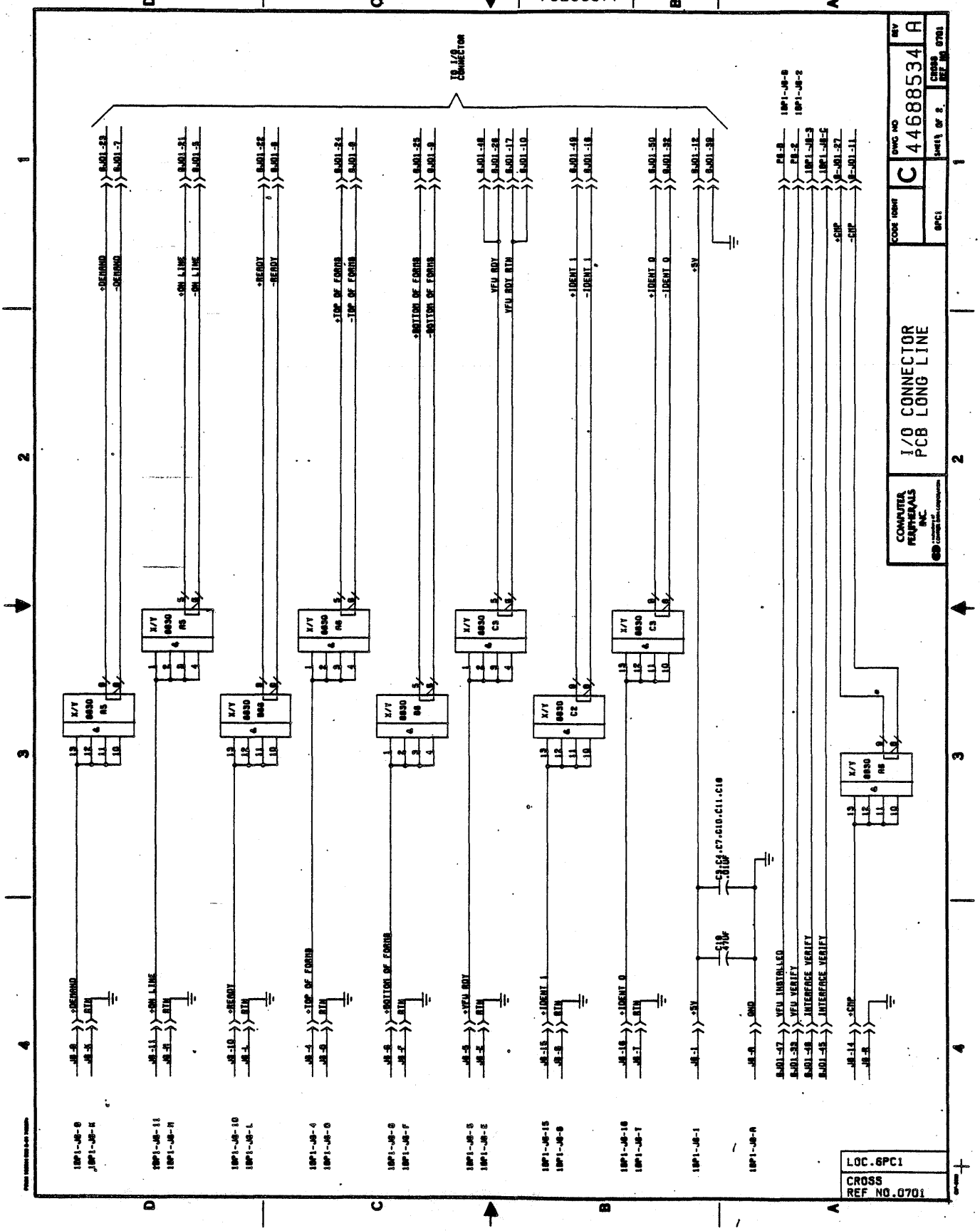
I/O CONNECTOR
PCB LONG LINE
COMPUTER PERIPHERALS INC.
C
44688534
A
LOC.6PC1
CROSS REF NO.0701

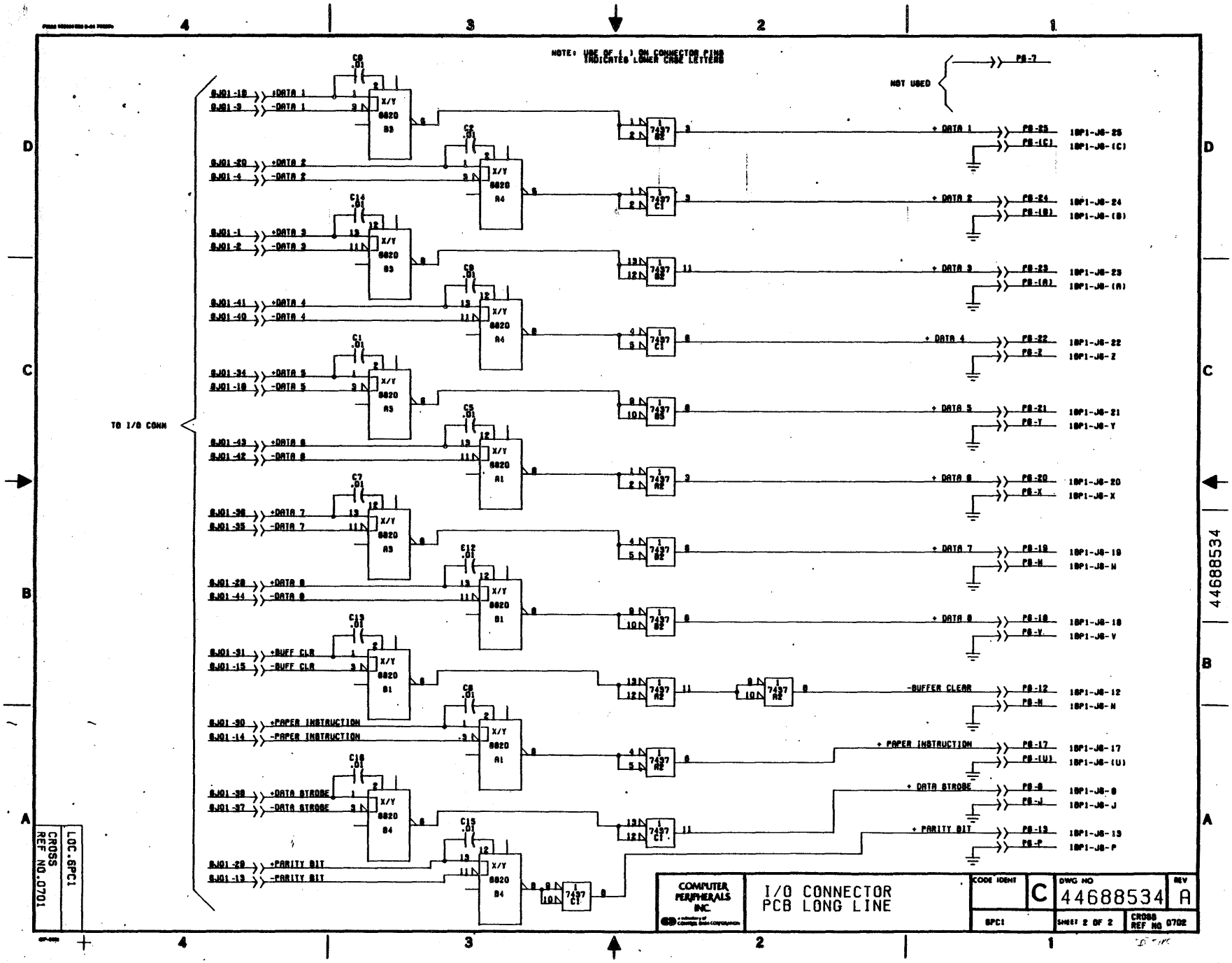

11-89/11-90

44688534

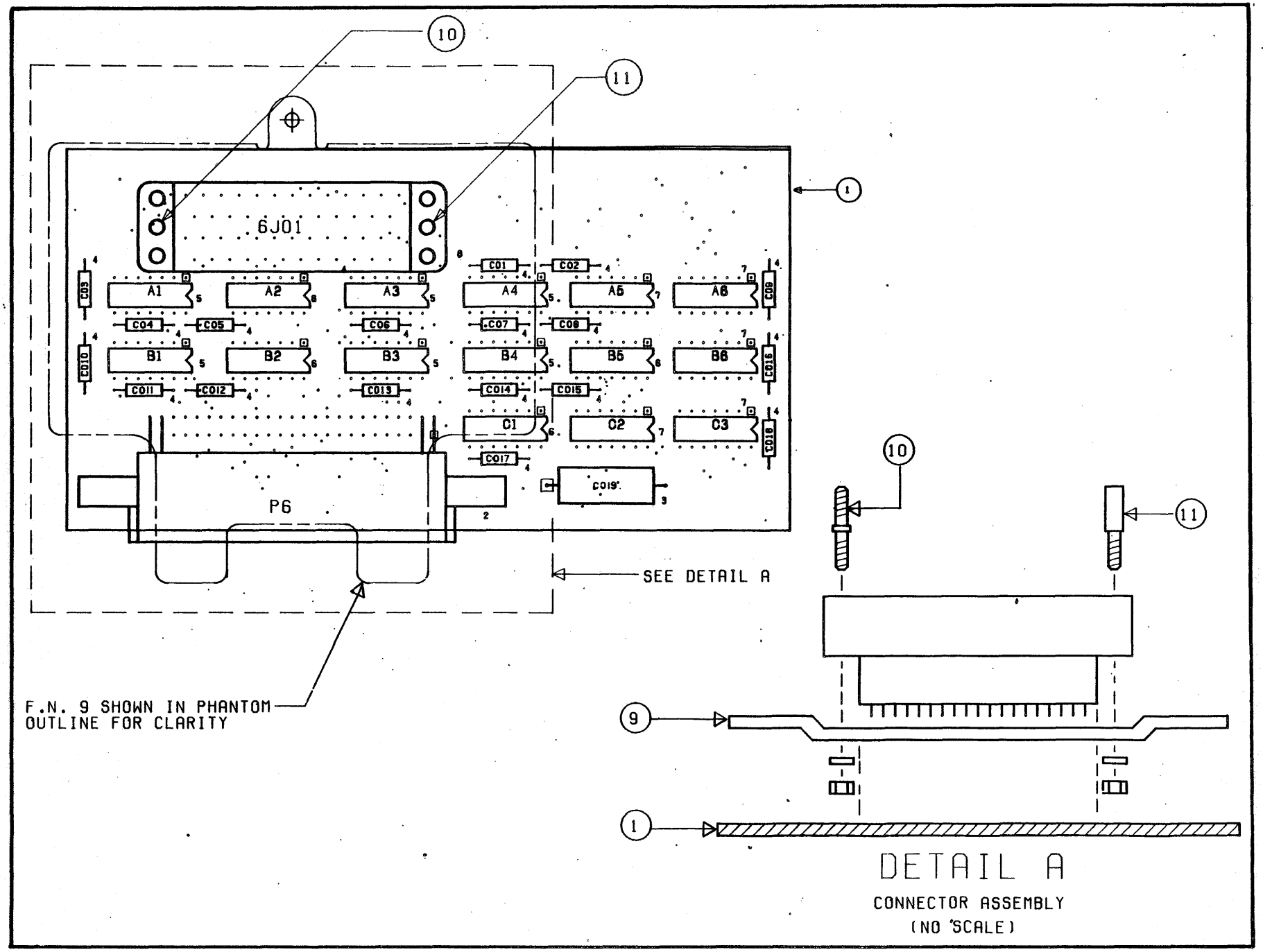

I/O ADAPTOR - WINCHESTER TYPE, LONG LINE

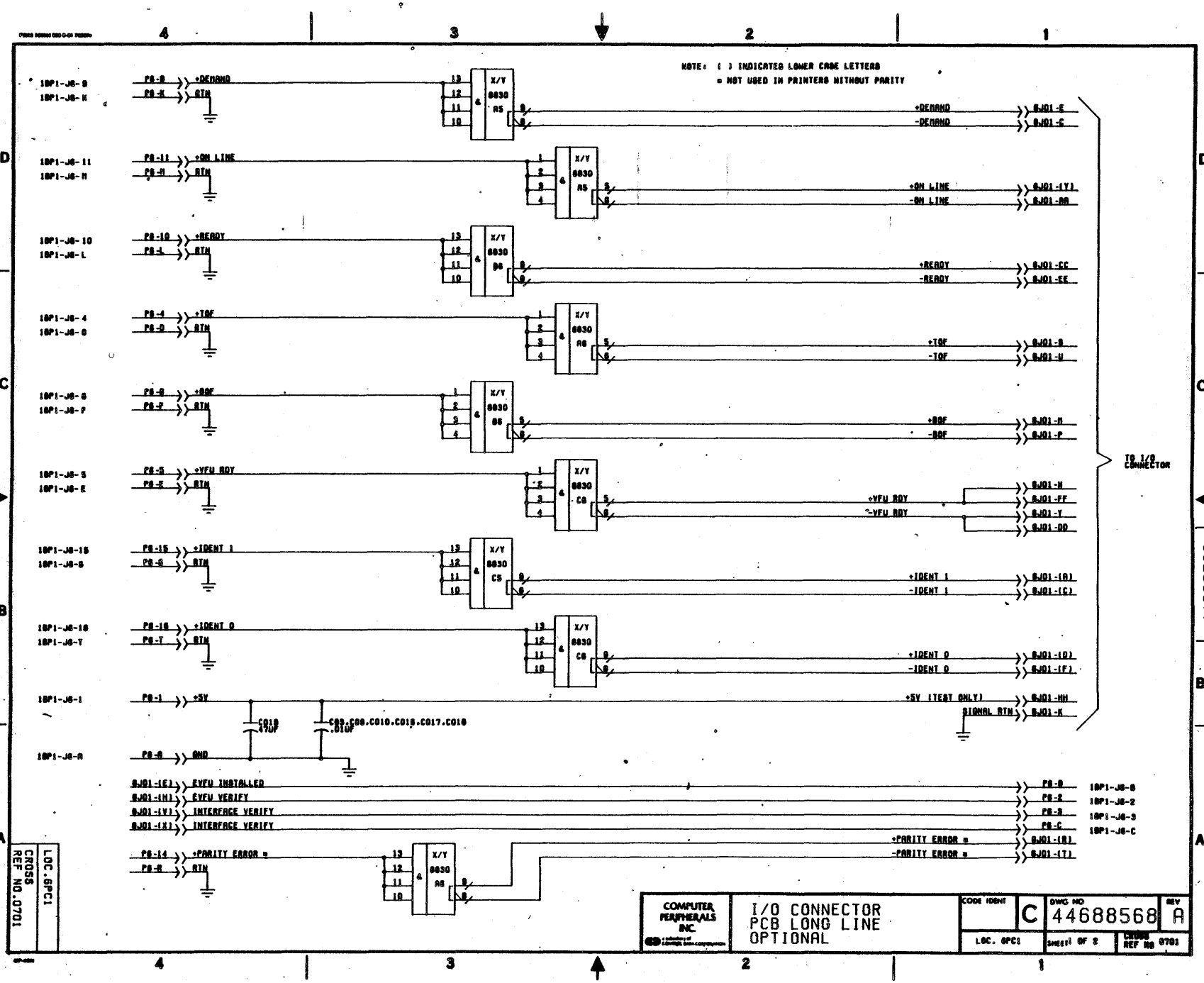
NOTE: ( ) INDICATES LOWER CASE LETTERS
¤ NOT USED IN PRINTERS WITHOUT PARITY
1BP1-J6-9
1BP1-J6-K
P8-9
P8-K
+DEMAND
RTN
X/Y 8030 A5
+DEMAND
-DEMAND
8J01-E
8J01-C
1BP1-J6-11
1BP1-J6-M
P8-11
P8-M
+ON LINE
RTN
X/Y 8030 A5
+ON LINE
-ON LINE
8J01-(Y)
8J01-AA
1BP1-J6-10
1BP1-J6-L
P8-10
P8-L
+READY
RTN
X/Y 8030 B6
+READY
-READY
8J01-CC
8J01-EE
1BP1-J6-4
1BP1-J6-D
P8-4
P8-D
+TOF
RTN
X/Y 8030 A6
+TOF
-TOF
8J01-S
8J01-U
1BP1-J6-6
1BP1-J6-F
P8-6
P8-F
+BOF
RTN
X/Y 8030 B6
+BOF
-BOF
8J01-R
8J01-P
1BP1-J6-5
1BP1-J6-E
P8-5
P8-E
+VFU RDY
RTN
X/Y 8030 C6
+VFU RDY
-VFU RDY
8J01-N
8J01-FF
8J01-Y
8J01-DD
1BP1-J6-15
1BP1-J6-8
P8-15
P8-8
+IDENT 1
RTN
X/Y 8030 C5
+IDENT 1
-IDENT 1
8J01-(A)
8J01-(C)
1BP1-J6-16
1BP1-J6-T
P8-16
P8-T
+IDENT 0
RTN
X/Y 8030 C6
+IDENT 0
-IDENT 0
8J01-(D)
8J01-(F)
1BP1-J6-1
P8-1
+5V
C010 .47UF
C009,C008,C010,C018,C017,C016 .01UF
+5V (TEST ONLY)
SIGNAL RTN
8J01-HH
8J01-K
1BP1-J6-A
P8-A
GND
TO I/O CONNECTOR
8J01-(E)
EVFU INSTALLED
8J01-(N)
EVFU VERIFY
8J01-(Y)
INTERFACE VERIFY
8J01-(X)
INTERFACE VERIFY
P8-B
P8-2
P8-3
P8-C
1BP1-J6-B
1BP1-J6-2
1BP1-J6-3
1BP1-J6-C
P8-14
P8-R
+PARITY ERROR ¤
RTN
X/Y 8030 A8
+PARITY ERROR ¤
-PARITY ERROR ¤
8J01-(R)
8J01-(T)
CROSS REF NO.0701
LOC.8PC1
COMPUTER PERIPHERALS INC.
I/O CONNECTOR
PCB LONG LINE
OPTIONAL
CODE IDENT
C
DWG NO
44688568
REV
A
LOC. 8PC1
SHEET 8F 2
CROSS REF NO 0701
44688568

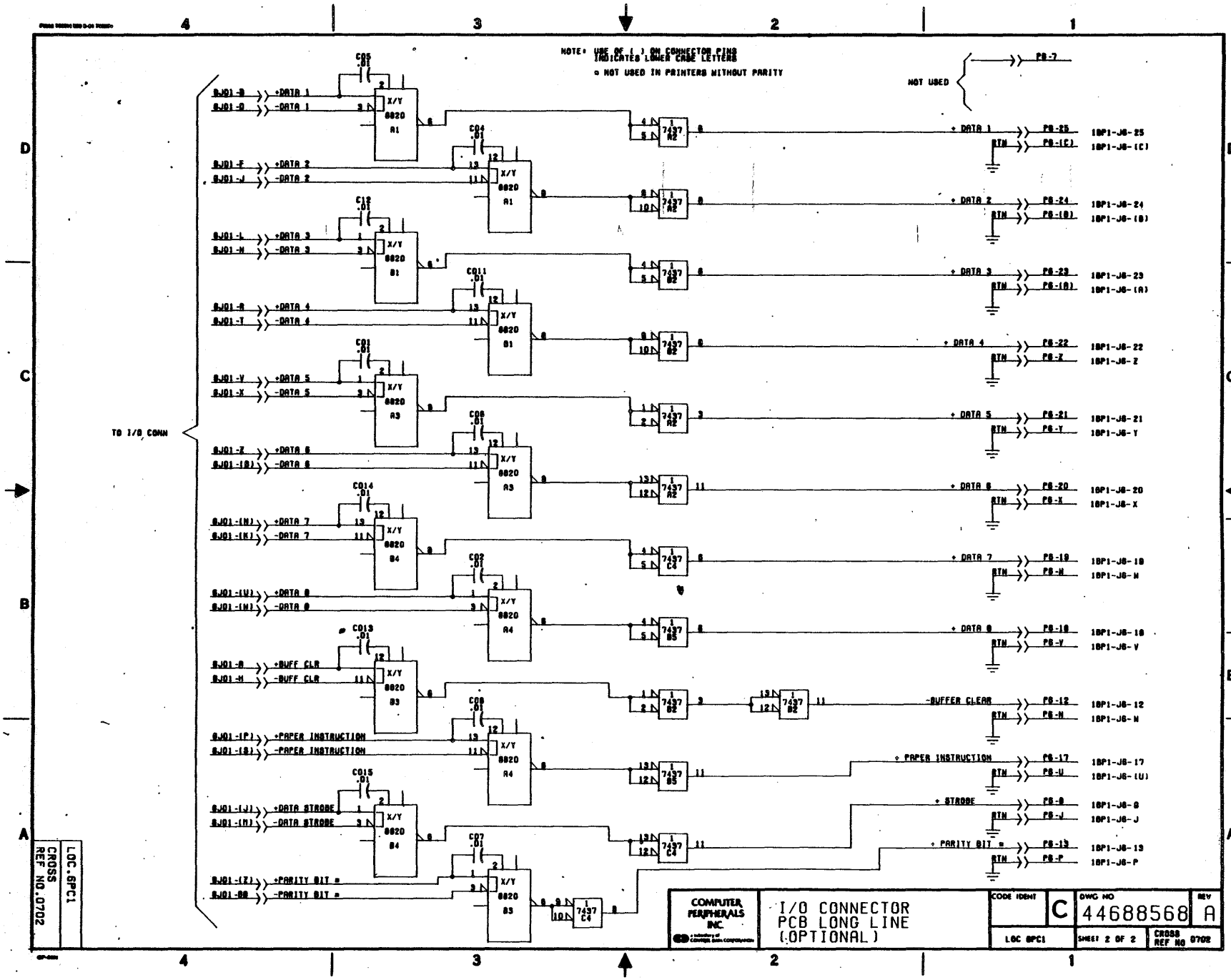
NOTE: USE OF ( ) ON CONNECTOR PINS INDICATES LOWER CASE LETTERS
* NOT USED IN PRINTERS WITHOUT PARITY
NOT USED
TO I/O CONN
+DATA 1
-DATA 1
+DATA 2
-DATA 2
+DATA 3
-DATA 3
+DATA 4
-DATA 4
+DATA 5
-DATA 5
+DATA 6
-DATA 6
+DATA 7
-DATA 7
+DATA 8
-DATA 8
+BUFF CLR
-BUFF CLR
+PAPER INSTRUCTION
-PAPER INSTRUCTION
+DATA STROBE
-DATA STROBE
+PARITY BIT *
-PARITY BIT *
-BUFFER CLEAR
+STROBE
+PARITY BIT *
LOC.6PC1
CROSS REF NO.0702
COMPUTER PERIPHERALS INC.
I/O CONNECTOR PCB LONG LINE (OPTIONAL)
CODE IDENT C
DWG NO 44688568
REV A
LOC 6PC1
SHEET 2 OF 2
CROSS REF NO 0702
44688568

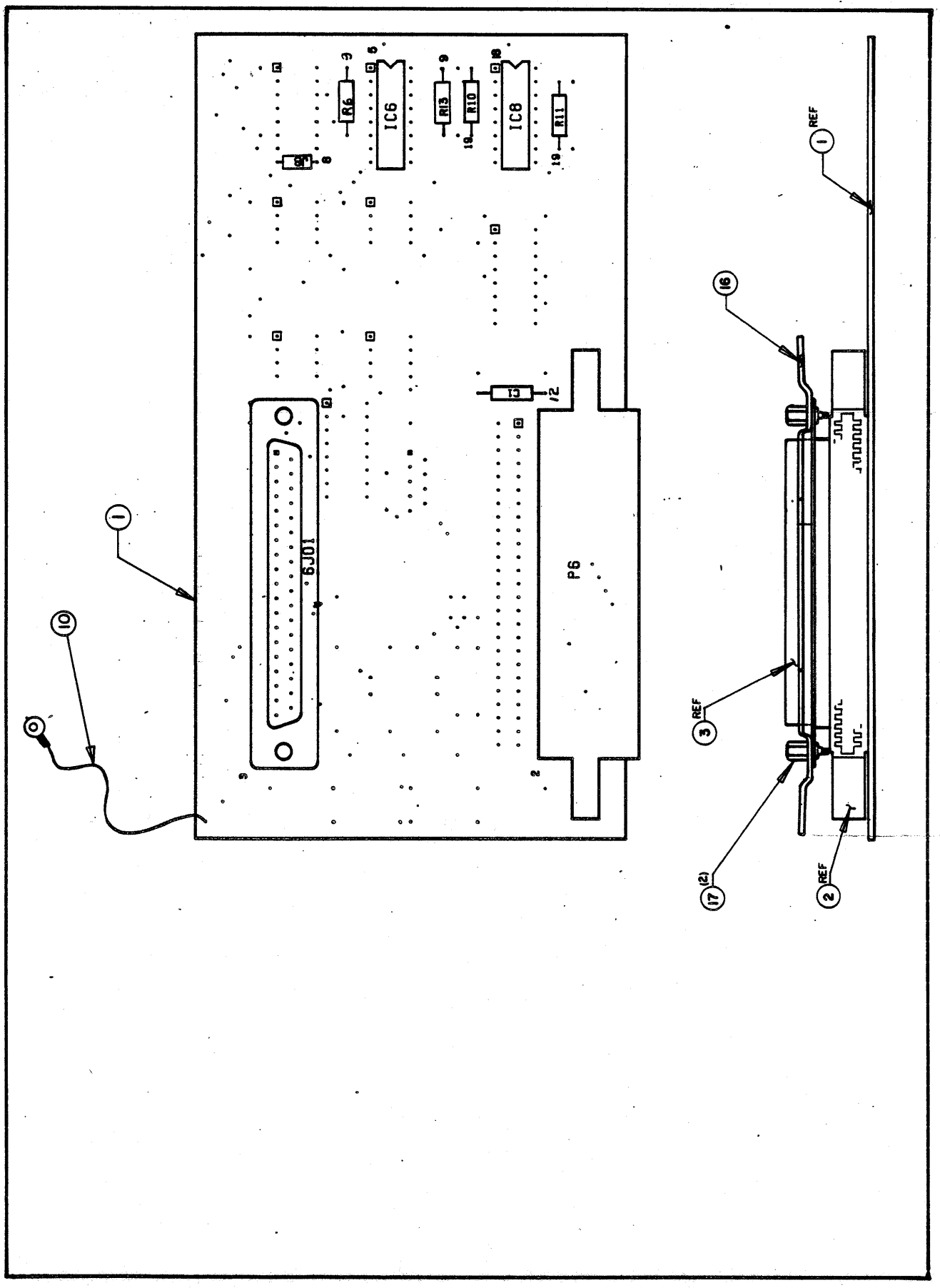

I/O ADAPTOR - SERIES 1

CROSS REF NO: 0700
MODULE LOC: 6PC1
SCHEMATIC NO: 44690623

PART NO: 44690624
REV: A
DATE: 3-1-83
SHT: 2

LOGIC SIGNAL CROSS REF. DETACHED LIST

MODULE INPUTS

SOURCE	SIGNAL NAME	MODULE CROSS REF NO.
0100/1PC1	-DTR	0701/P6-2
0100/1PC1	+T DATA	0701/P6-4
0100/1PC1	-T SET OUT	0701/P6-21
0100/1PC1	-RTS	0701/P6-8
	+5V	0701/P6-1
	GND	0701/P6-A
	GND	0701/P6-C thru P6-Z
	GND	P6- (A)
	GND	P6- (B)
	GND	P6- (C)

CROSS REF NO: 0700
MODULE LOC: 6PC1
SCHEMATIC NO: 44690623

PART NO: 44690624
REV: A
DATE: 3-1-83
SHT: 2

MODULE OUTPUTS

SOURCE	SIGNAL NAME	MODULE CROSS REF NO.
0701/P6-8	+RXD	0100/1PC1
0701/P6-5	-RSET IN	0100/1PC1
0701/P6-11	-CTS	0100/1PC1
0701/P6-6	-TSET IN	0100/1PC1

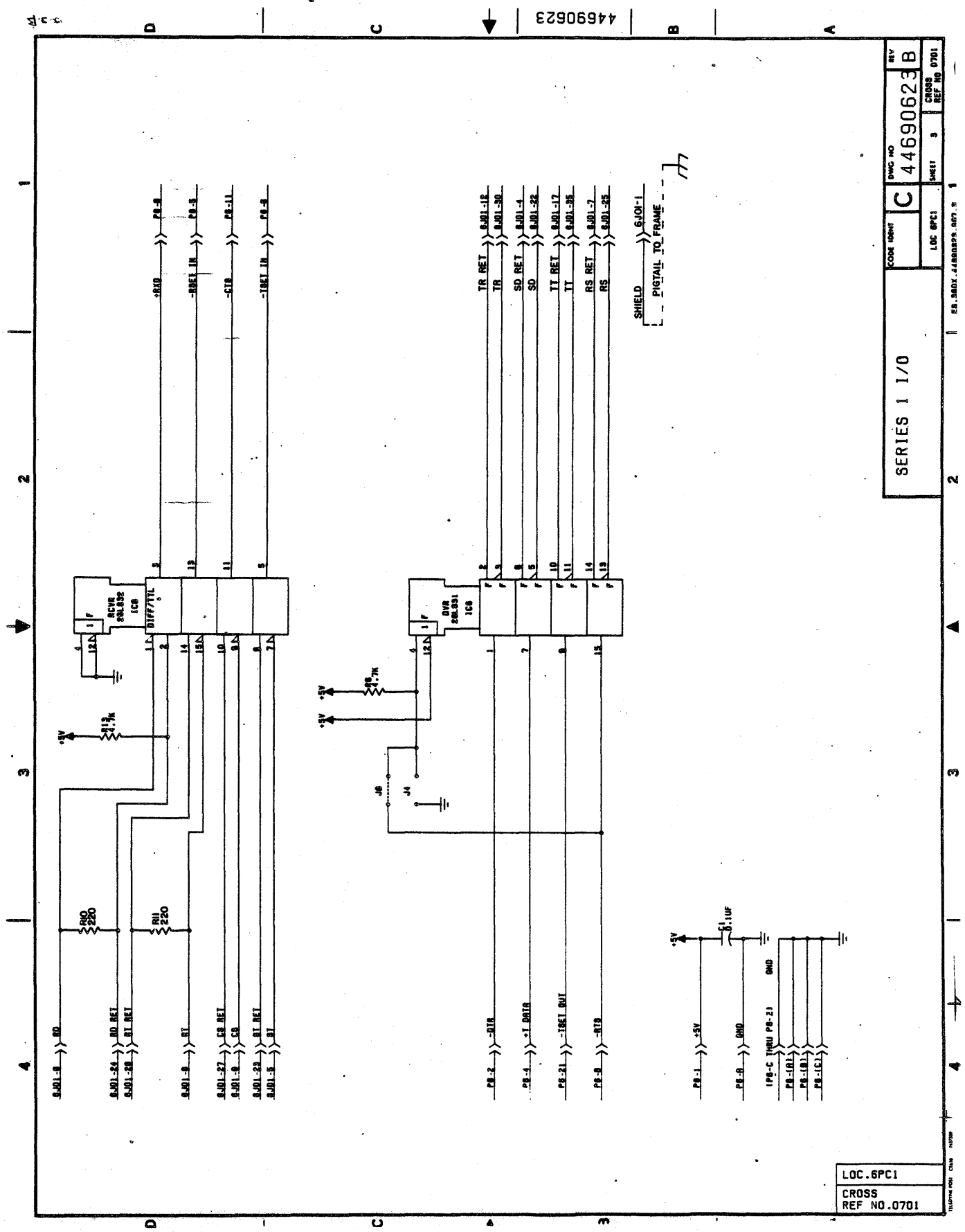

SERIES 1 I/O
C
44690623
B
LOC 6PC1
CROSS REF NO 0701
LOC.6PC1
CROSS REF NO.0701
RCVR 20L832 IC8
DIFF/TTL
DVR 20L831 IC8
+RXD
-RSET IN
-CTS
-TSET IN
TR RET
TR
SD RET
SD
TT RET
TT
RS RET
RS
SHIELD
PIGTAIL TO FRAME
R13 4.7K
R6 4.7K
R10 220
R11 220
C1 0.1UF
J8
J4
+5V

PERSONALITY MODULES

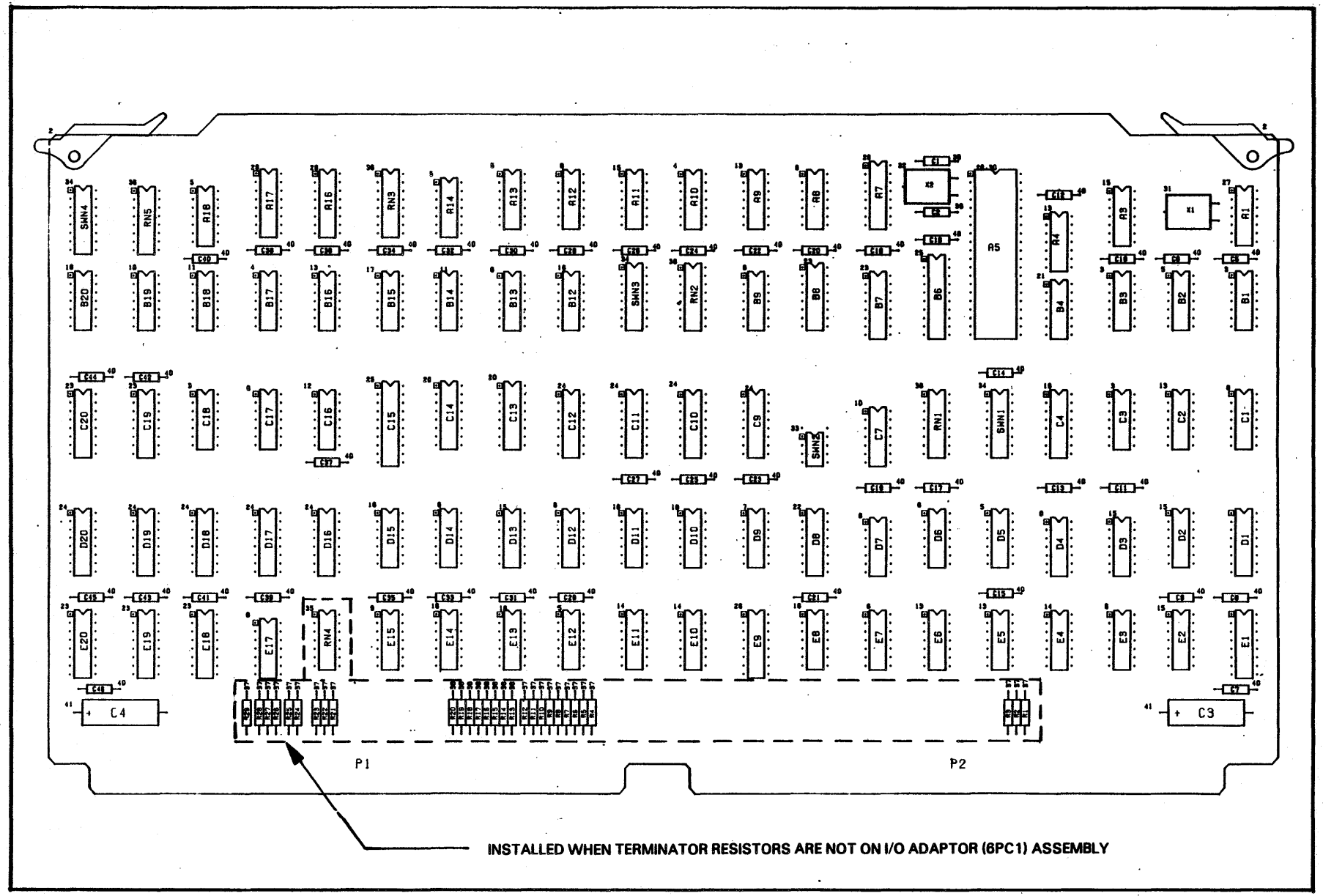

DATA PRODUCTS COMPATIBLE PERSONALITY MODULE

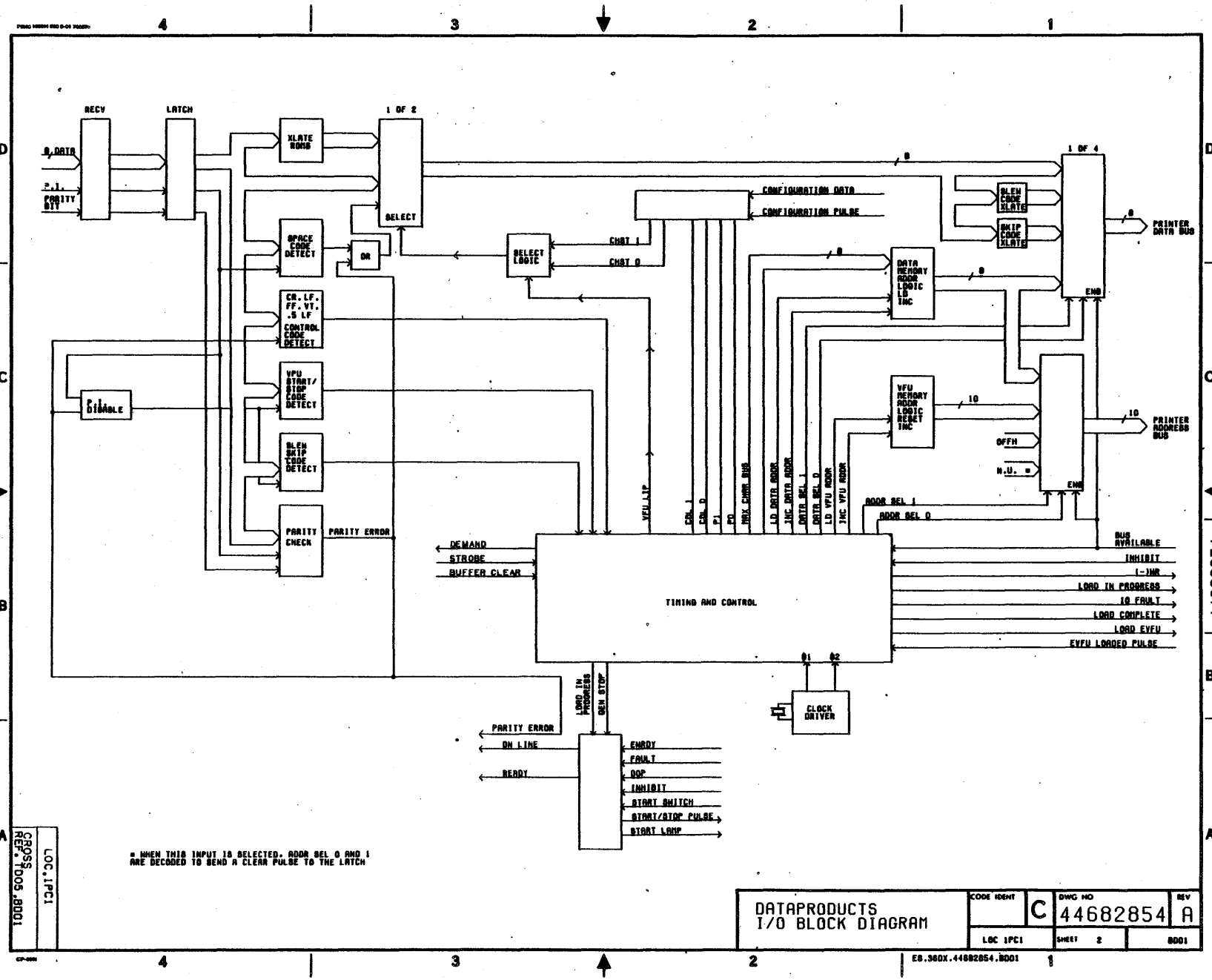
RECV
LATCH
1 OF 2
SELECT
XLATE ROMS
SPACE CODE DETECT
OR
CR. LF. FF. VT. .5 LF CONTROL CODE DETECT
VPU START/ STOP CODE DETECT
SLEW SKIP CODE DETECT
PARITY CHECK
PARITY ERROR
P.I. DISABLE
SELECT LOGIC
CHST 1
CHST 0
CONFIGURATION DATA
CONFIGURATION PULSE
1 OF 4
SLEW CODE XLATE
SKIP CODE XLATE
PRINTER DATA BUS
DATA MEMORY ADDR LOGIC LD INC
VFU MEMORY ADDR LOGIC RESET INC
PRINTER ADDRESS BUS
OFFH
N.U. *
ADDR SEL 1
ADDR SEL 0
VFU LIP
COL 1
COL 0
P1
P0
MAX CHAR BUS
LD DATA ADDR
INC DATA ADDR
DATA SEL 1
DATA SEL 0
LD VFU ADDR
INC VFU ADDR
DEMAND
STROBE
BUFFER CLEAR
TIMING AND CONTROL
BUS AVAILABLE
INHIBIT
(-)WR
LOAD IN PROGRESS
IO FAULT
LOAD COMPLETE
LOAD EVFU
EVFU LOADED PULSE
CLOCK DRIVER
LOAD IN PROGRESS
GEN STOP
PARITY ERROR
ON LINE
READY
ENRDY
FAULT
DOP
INHIBIT
START SWITCH
START/STOP PULSE
START LAMP
* WHEN THIS INPUT IS SELECTED, ADDR SEL 0 AND 1 ARE DECODED TO SEND A CLEAR PULSE TO THE LATCH
LOC.1PC1
CROSS REF. TD05.BD01
DATAPRODUCTS I/O BLOCK DIAGRAM
CODE IDENT
C
DWG NO 44682854
REV A
LOC 1PC1
SHEET 2
BD01
ES.360X.44682854.BD01
44682854

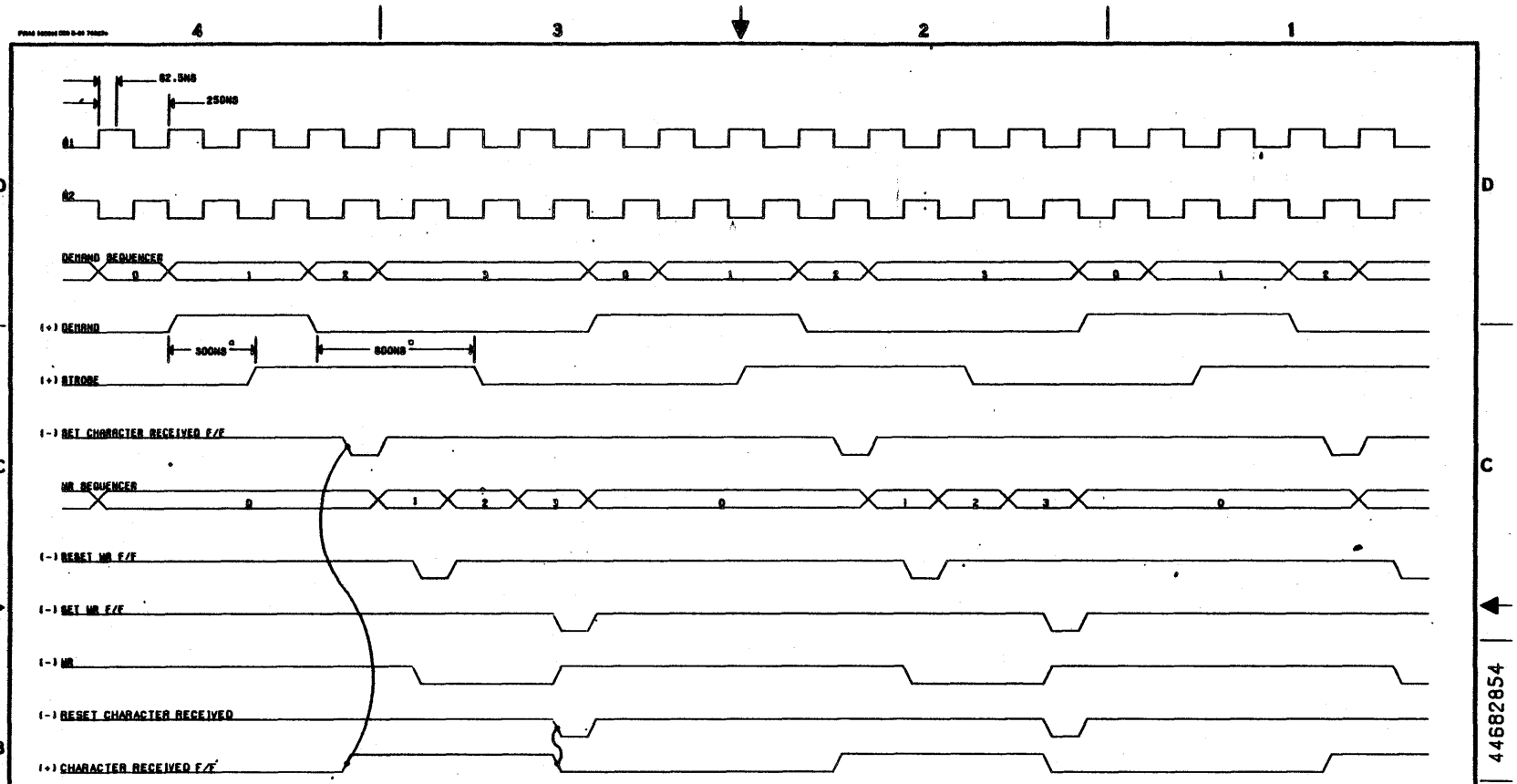

*TIMING FROM B300 INTERFACE DIAGRAM.

DEMAND SEQUENCER

STATE	DESCRIPTION
00	INSURE DEMAND=0 THEN WAIT FOR ENABLE
01	RAISE DEMAND AND WAIT FOR STROBE
10	DROP DEMAND AND SET CHARACTER RECEIVED F/F
11	WAIT FOR CHARACTER ACK AND WAIT FOR DATA SOURCE TO DROP STROBE

WR SEQUENCER

STATE	DESCRIPTION
00	REQUEST CHARACTER AND WAIT FOR CHARACTER RECEIVED AND SOCC
01	RESET (-)WR F/F
10	NOP
11	SET (-)WR F/F AND RESET CHARACTER RECEIVED F/F THIS PULSE ALSO INCREMENTS THE

NOTE: CHARACTER ACK IS (-) CHARACTER RECEIVED F/F

CROSS REF NO. TD01

LOC. IPC1

DEMAND AND WRITE SEQUENCER - TIMING DIAGRAM	CODE IDENT C	DWG NO 44682854	REV A
	LOC IPC1	SHEET 3	CROSS REF NO TD01

44682854

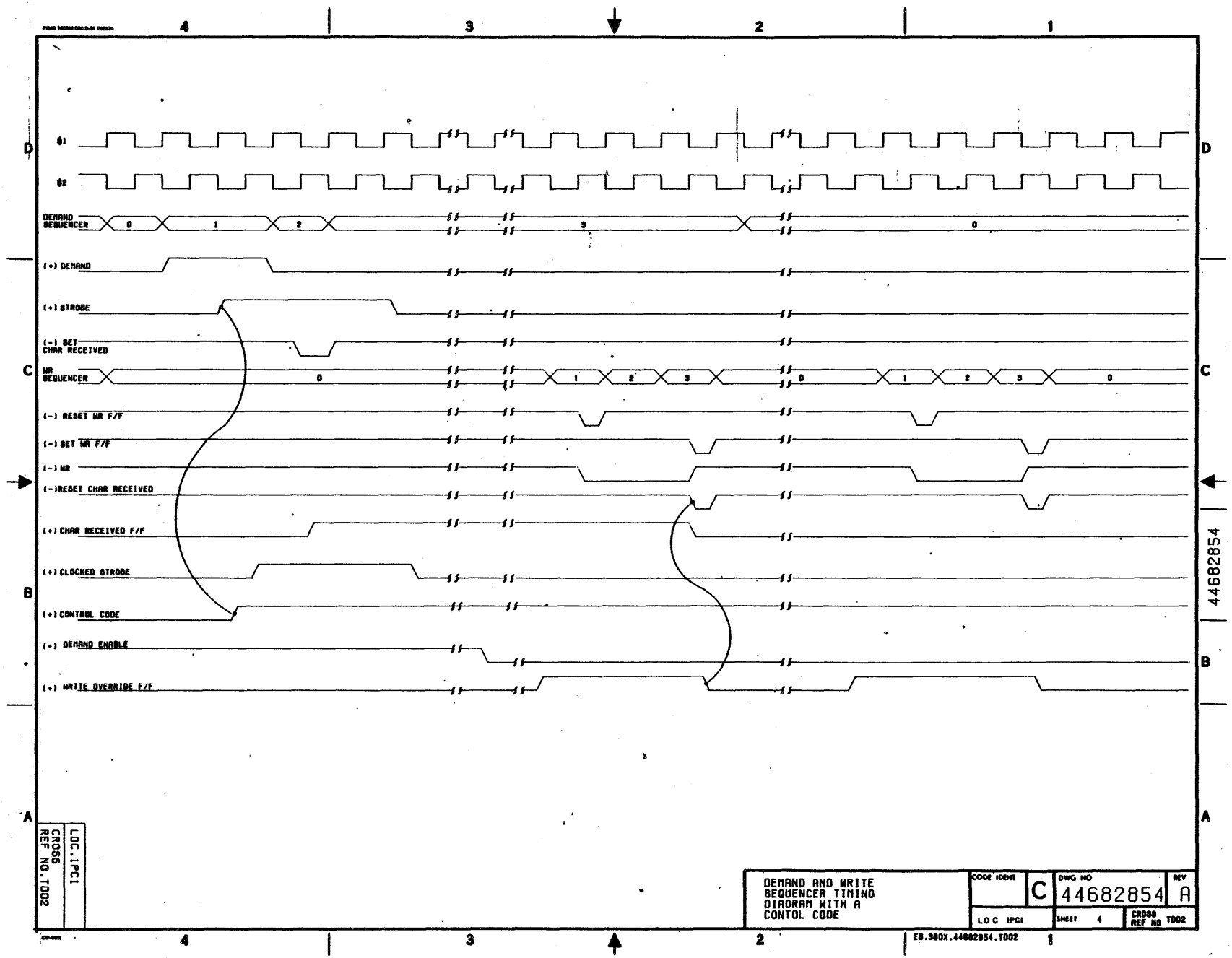
4
3
2
1
D
C
B
A
Φ1
Φ2
DEMAND SEQUENCER
0
1
2
3
0
(+) DEMAND
(+) STROBE
(-) SET CHAR RECEIVED
WR SEQUENCER
0
1
2
3
0
1
2
3
0
(-) RESET WR F/F
(-) SET WR F/F
(-) WR
(-)RESET CHAR RECEIVED
(+) CHAR RECEIVED F/F
(+) CLOCKED STROBE
(+) CONTROL CODE
(+) DEMAND ENABLE
(+) WRITE OVERRIDE F/F
CROSS REF NO.TD02
LOC.IPC1
DEMAND AND WRITE SEQUENCER TIMING DIAGRAM WITH A CONTOL CODE
CODE IDENT
C
DWG NO
44682854
REV
A
LOC IPC1
SHEET 4
CROSS REF NO TD02
E8.360X.44682854.TD02
44682854

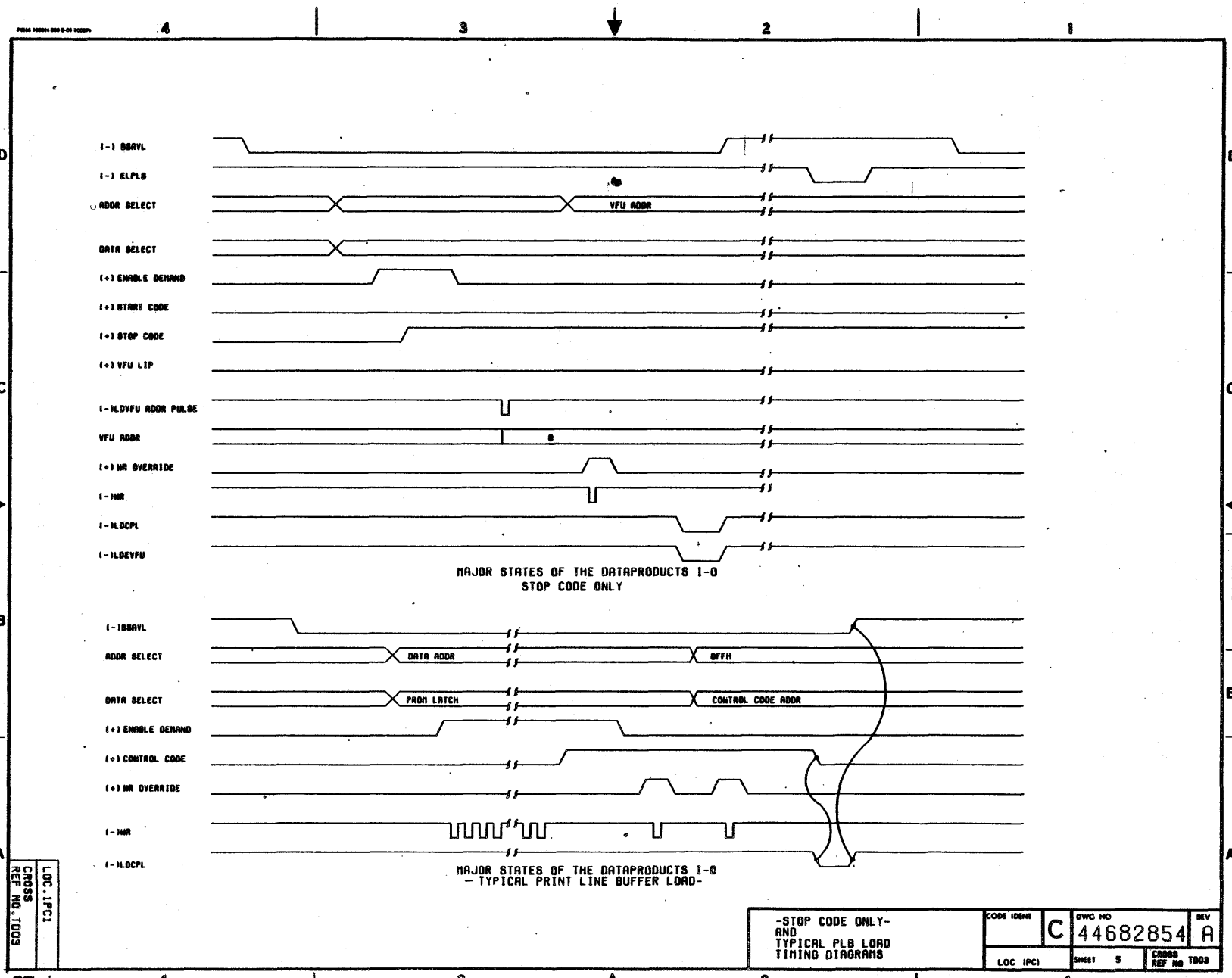
4
3
2
1
D
C
B
A
(-) BBAVL
(-) ELPLB
ADDR SELECT
VFU ADDR
DATA SELECT
(+) ENABLE DEMAND
(+) START CODE
(+) STOP CODE
(+) VFU LIP
(-)LDVFU ADDR PULSE
VFU ADDR
0
(+) MR OVERRIDE
(-)MR
(-)LDCPL
(-)LDEVFU
MAJOR STATES OF THE DATAPRODUCTS I-O
STOP CODE ONLY
(-)BBAVL
ADDR SELECT
DATA ADDR
0FFH
DATA SELECT
PROM LATCH
CONTROL CODE ADDR
(+) ENABLE DEMAND
(+) CONTROL CODE
(+) MR OVERRIDE
(-)MR
(-)LDCPL
MAJOR STATES OF THE DATAPRODUCTS I-O
- TYPICAL PRINT LINE BUFFER LOAD-
CROSS REF NO. TD03
LOC. IPC1
-STOP CODE ONLY-
AND
TYPICAL PLB LOAD
TIMING DIAGRAMS
CODE IDENT
C
DWG NO
44682854
REV
A
LOC IPC1
SHEET 5
CROSS REF NO TD03
44682854

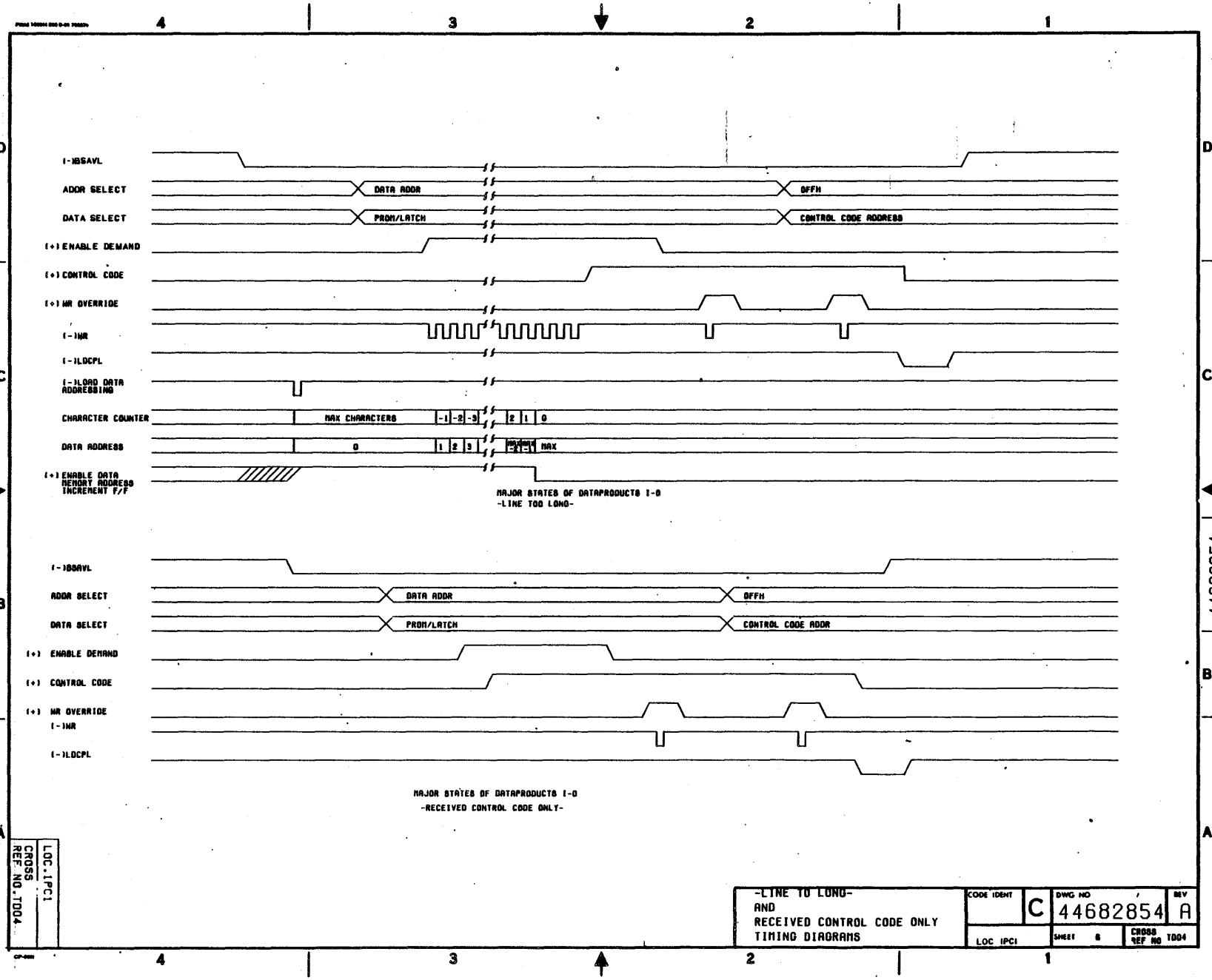
4
3
2
1
D
C
B
A
(-)BSAVL
ADDR SELECT
DATA ADDR
0FFH
DATA SELECT
PROM/LATCH
CONTROL CODE ADDRESS
(+) ENABLE DEMAND
(+) CONTROL CODE
(+) WR OVERRIDE
(-)WR
(-)LDCPL
(-)LOAD DATA ADDRESSING
CHARACTER COUNTER
MAX CHARACTERS
-1 -2 -3
2 1 0
DATA ADDRESS
0
1 2 3
-2 -1
MAX
(+) ENABLE DATA MEMORY ADDRESS INCREMENT F/F
MAJOR STATES OF DATAPRODUCTS I-O
-LINE TOO LONG-
(-)BSAVL
ADDR SELECT
DATA ADDR
0FFH
DATA SELECT
PROM/LATCH
CONTROL CODE ADDR
(+) ENABLE DEMAND
(+) CONTROL CODE
(+) WR OVERRIDE
(-)WR
(-)LDCPL
MAJOR STATES OF DATAPRODUCTS I-O
-RECEIVED CONTROL CODE ONLY-
CROSS REF NO. TD04
LOC. IPC1
-LINE TO LONG-
AND
RECEIVED CONTROL CODE ONLY
TIMING DIAGRAMS
CODE IDENT
C
DWG NO
44682854
REV
A
LOC IPC1
SHEET 8
CROSS REF NO TD04

44682854

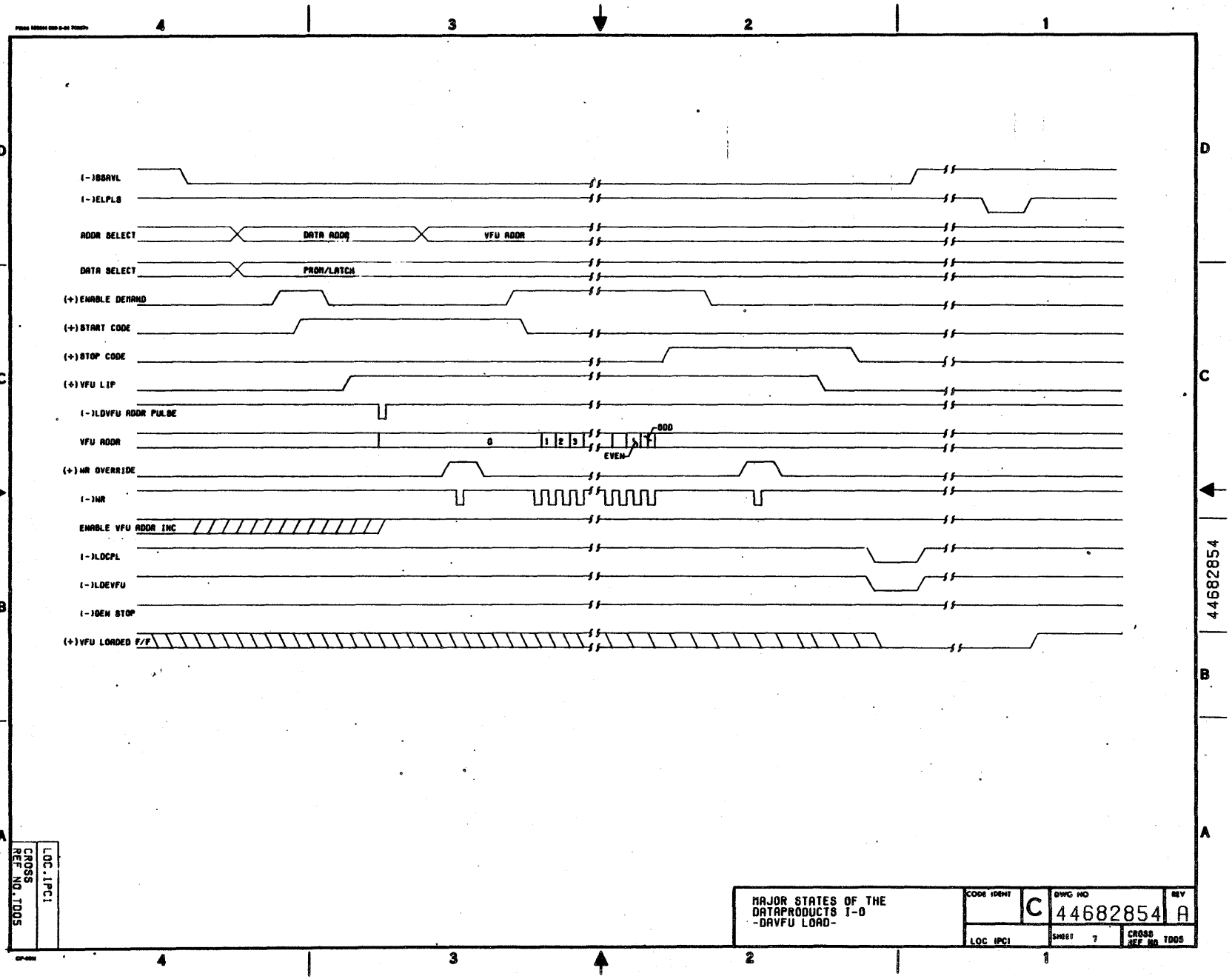
4
3
2
1
D
C
B
A
(-)BBAVL
(-)ELPLS
ADDR SELECT
DATA ADDR
VFU ADDR
DATA SELECT
PROM/LATCH
(+)ENABLE DEMAND
(+)START CODE
(+)STOP CODE
(+)VFU LIP
(-)LDVFU ADDR PULSE
VFU ADDR
0
1
2
3
000
EVEN
(+)WR OVERRIDE
(-)WR
ENABLE VFU ADDR INC
(-)LDCPL
(-)LDEVFU
(-)GEN STOP
(+)VFU LOADED F/F
CROSS REF NO. TDOS
LOC. (PC)
MAJOR STATES OF THE DATAPRODUCTS I-O -DAVFU LOAD-
CODE IDENT
C
DWG NO
44682854
REV
A
LOC (PC)
SHEET 7
CROSS REF NO TDOS
44682854

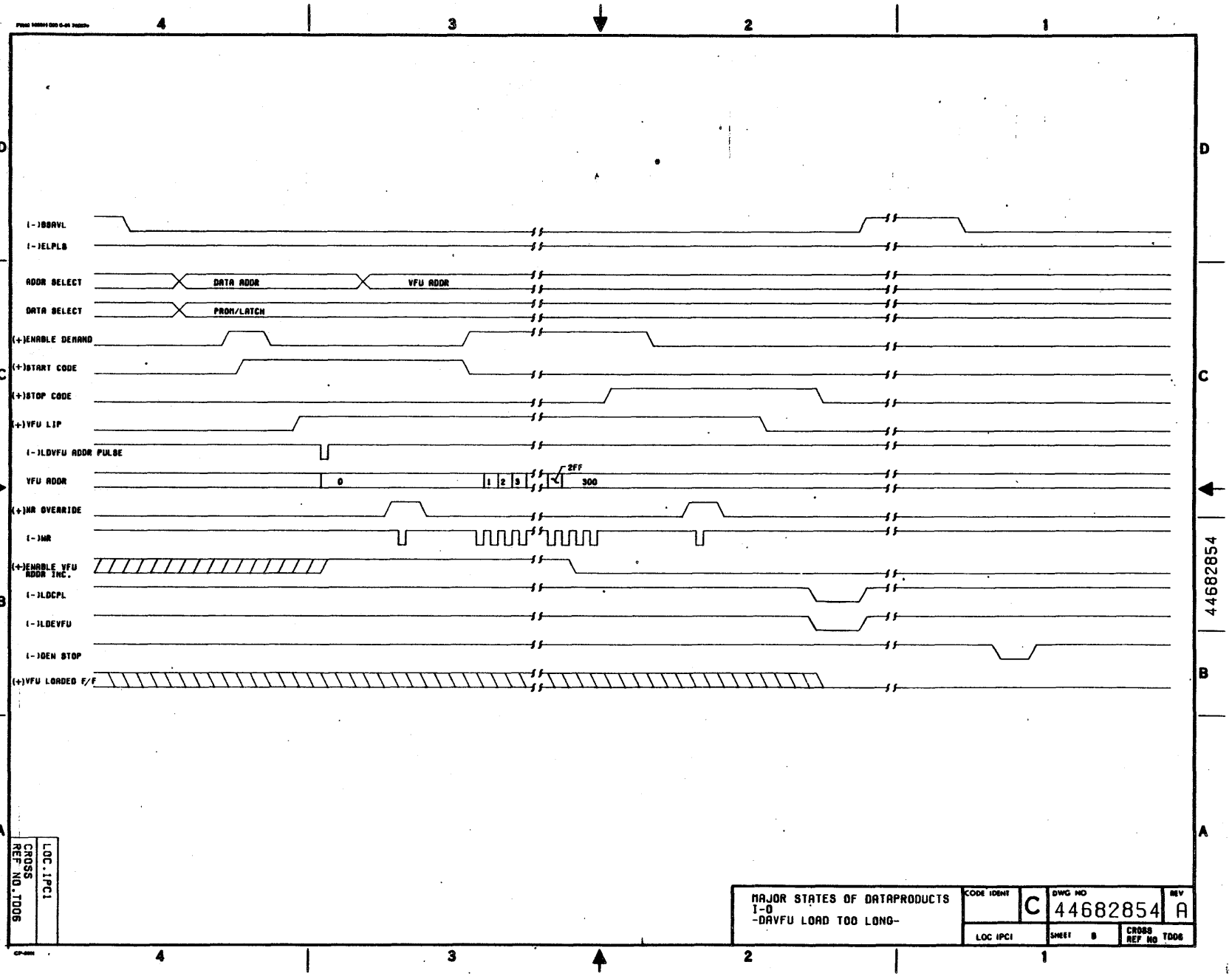
4
3
2
1
D
C
B
A
(-)BBAVL
(-)ELPLB
ADDR SELECT
DATA ADDR
VFU ADDR
DATA SELECT
PROM/LATCH
(+)ENABLE DEMAND
(+)START CODE
(+)STOP CODE
(+)VFU LIP
(-)LDVFU ADDR PULSE
VFU ADDR
0
1
2
3
2FF
300
(+)MR OVERRIDE
(-)MR
(+)ENABLE VFU ADDR INC.
(-)LDCPL
(-)LDDEVFU
(-)DEN STOP
(+)VFU LOADED F/F
CROSS REF NO. TDDG
LOC. IPCI
MAJOR STATES OF DATAPRODUCTS I-O
-DAVFU LOAD TOO LONG-
CODE IDENT
C
DWG NO
44682854
REV
A
LOC IPCI
SHEET 8
CROSS REF NO TDDG

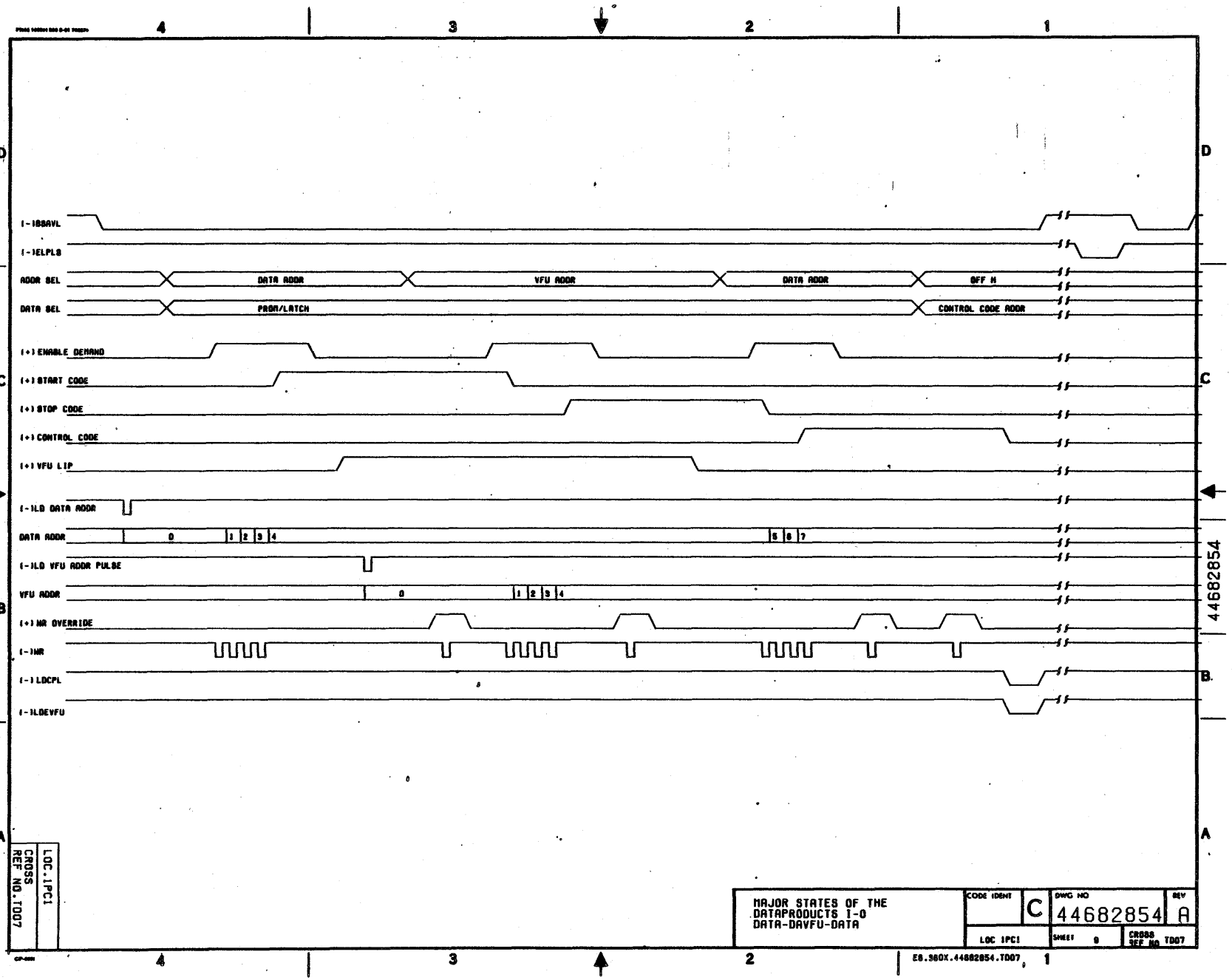
4
3
2
1
D
C
B
A
(-)SSAVL
(-)ELPLS
ADDR SEL
DATA ADDR
VFU ADDR
DATA ADDR
OFF H
DATA SEL
PROM/LATCH
CONTROL CODE ADDR
(+) ENABLE DEMAND
(+) START CODE
(+) STOP CODE
(+) CONTROL CODE
(+) VFU LIP
(-)LD DATA ADDR
DATA ADDR
0
1
2
3
4
5
6
7
(-)LD VFU ADDR PULSE
VFU ADDR
0
1
2
3
4
(+) NR OVERRIDE
(-)NR
(-) LDCPL
(-)LDEVFU
CROSS REF NO.TD07
LOC.IPC1
MAJOR STATES OF THE DATAPRODUCTS I-O DATA-DAVFU-DATA
CODE IDENT
C
DWG NO
44682854
REV
A
LOC IPC1
SHEET 9
CROSS REF NO TD07
E8.360X.44682854.TD07

44682854

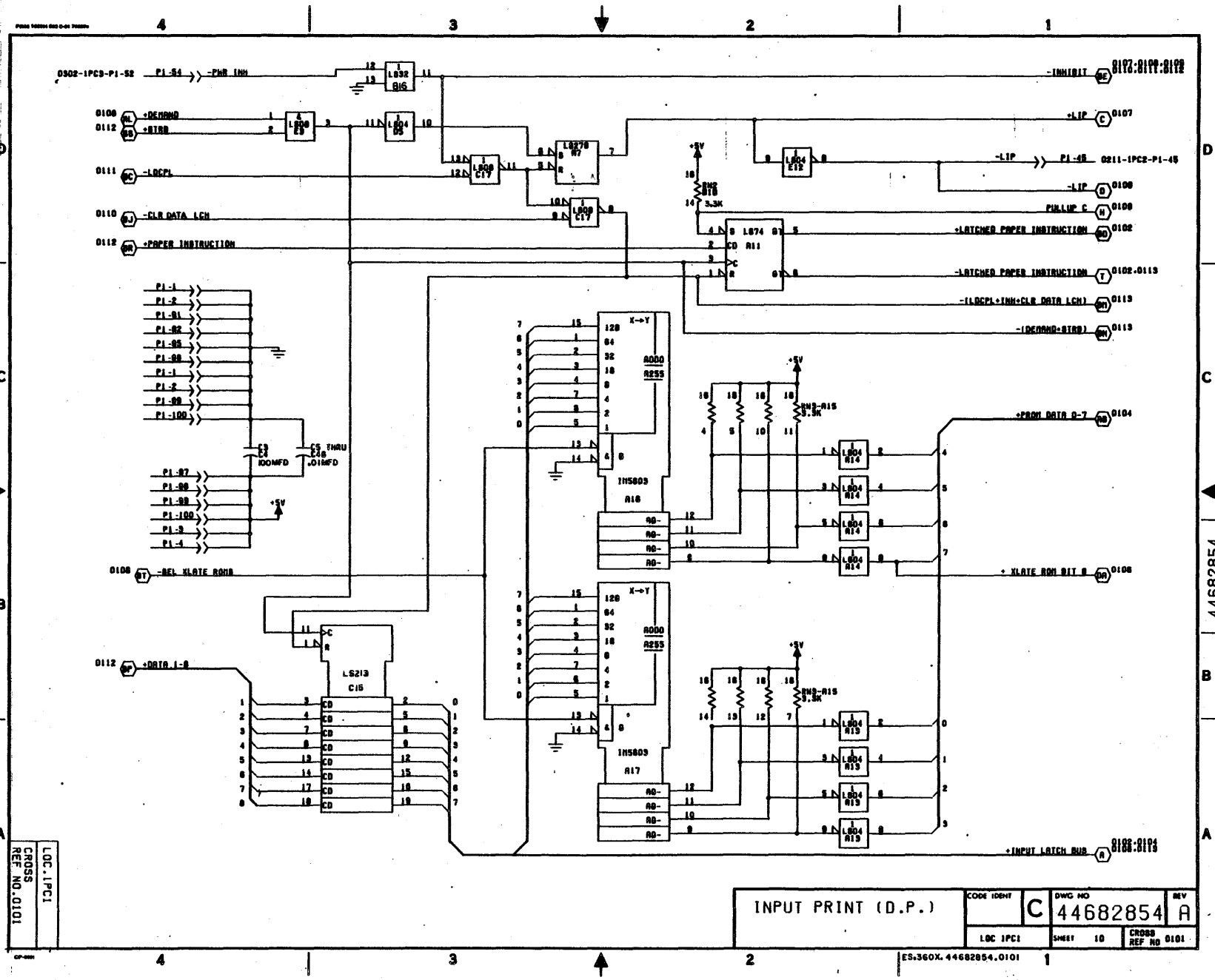
INPUT PRINT (D.P.)
CODE IDENT C
DWG NO 44682854
REV A
LOC 1PC1
SHEET 10
CROSS REF NO 0101
ES.360X.44682854.0101
CROSS REF NO.0101
LOC.1PC1
-INHIBIT
+LIP
-LIP
PULLUP C
+LATCHED PAPER INSTRUCTION
-LATCHED PAPER INSTRUCTION
-(LOCPL+INH+CLR DATA LCH)
-(DEMAND+STRB)
+PROM DATA 0-7
+ XLATE ROM BIT 0
+INPUT LATCH BUS
-PWR INH
+DEMAND
+STRB
-LOCPL
-CLR DATA LCH
+PAPER INSTRUCTION
-REL XLATE ROMB
+DATA 1-8
INS803
LS213

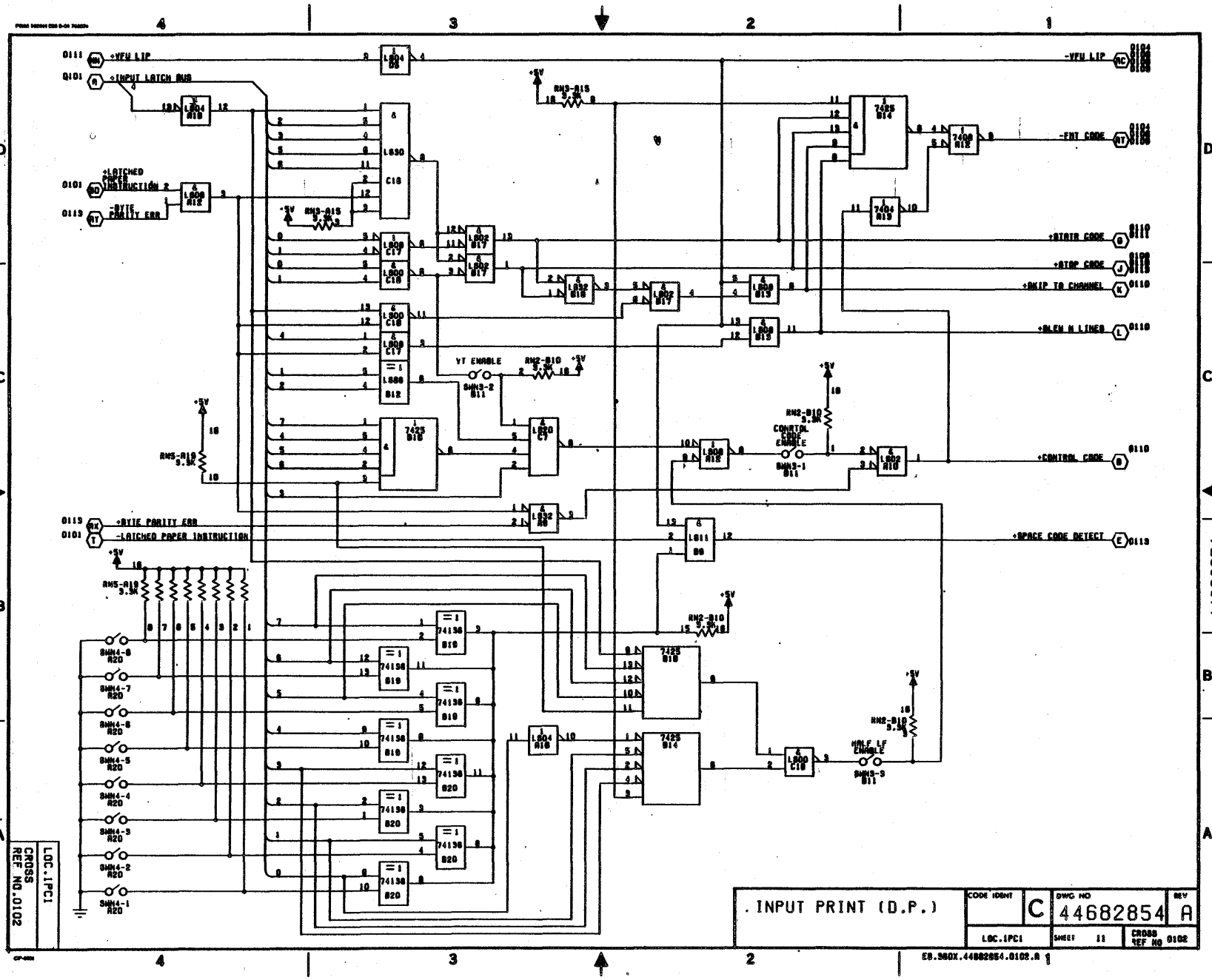
+VFU LIP
+INPUT LATCH BUS
+LATCHED PAPER INSTRUCTION 2
-BYTE PARITY ERR
-VFU LIP
-FNT CODE
+STATE CODE
+STOP CODE
+SKIP TO CHANNEL
+BLEW N LINES
+CONTROL CODE
+SPACE CODE DETECT
VT ENABLE
CONTROL CODE ENABLE
HALF LF ENABLE
RN5-A19 3.3K
RN3-A15 3.3K
RN2-B10 3.3K
SWN4-8 A20
SWN4-7 A20
SWN4-6 A20
SWN4-5 A20
SWN4-4 A20
SWN4-3 A20
SWN4-2 A20
SWN4-1 A20
SWN3-2 B11
SWN3-1 B11
SWN3-9 B11
. INPUT PRINT (D.P.)
CODE IDENT C
DWG NO 44682854
REV A
LOC.IPC1
SHEET 11
CROSS REF NO 0102
CROSS REF NO.0102
LOC.IPC1
EB.980X.44682854.0102.A

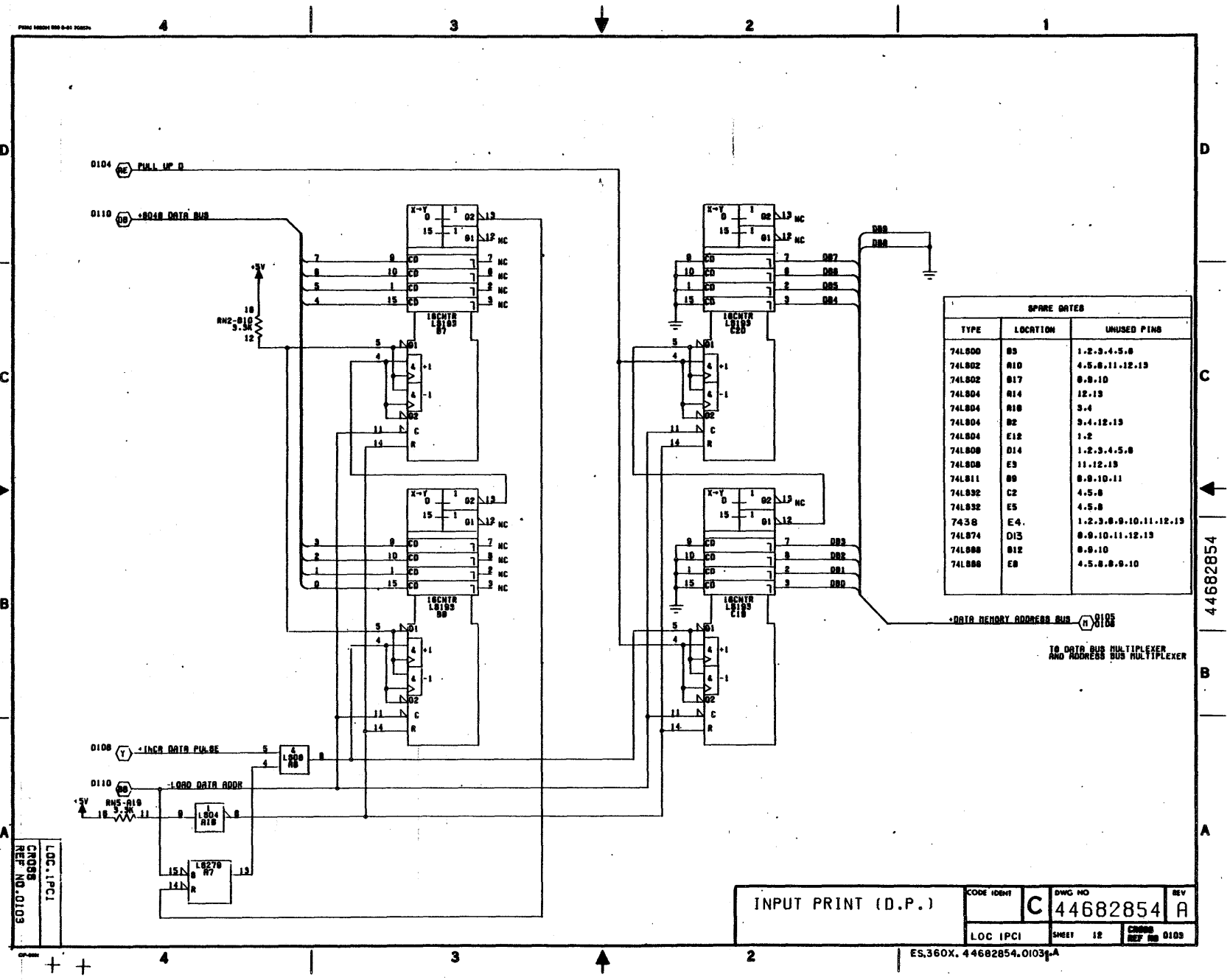

SPARE GATES		
TYPE	LOCATION	UNUSED PINS
74LS00	B5	1.2.3.4.5.6
74LS02	A10	4.5.6.11.12.13
74LS02	B17	8.9.10
74LS04	A14	12.13
74LS04	A18	3.4
74LS04	B2	3.4.12.13
74LS04	E12	1.2
74LS08	D14	1.2.3.4.5.6
74LS08	E3	11.12.13
74LS11	B9	8.9.10.11
74LS32	C2	4.5.6
74LS32	E5	4.5.6
7438	E4.	1.2.3.8.9.10.11.12.13
74LS74	D13	8.9.10.11.12.13
74LS86	B12	8.9.10
74LS86	E8	4.5.8.8.9.10

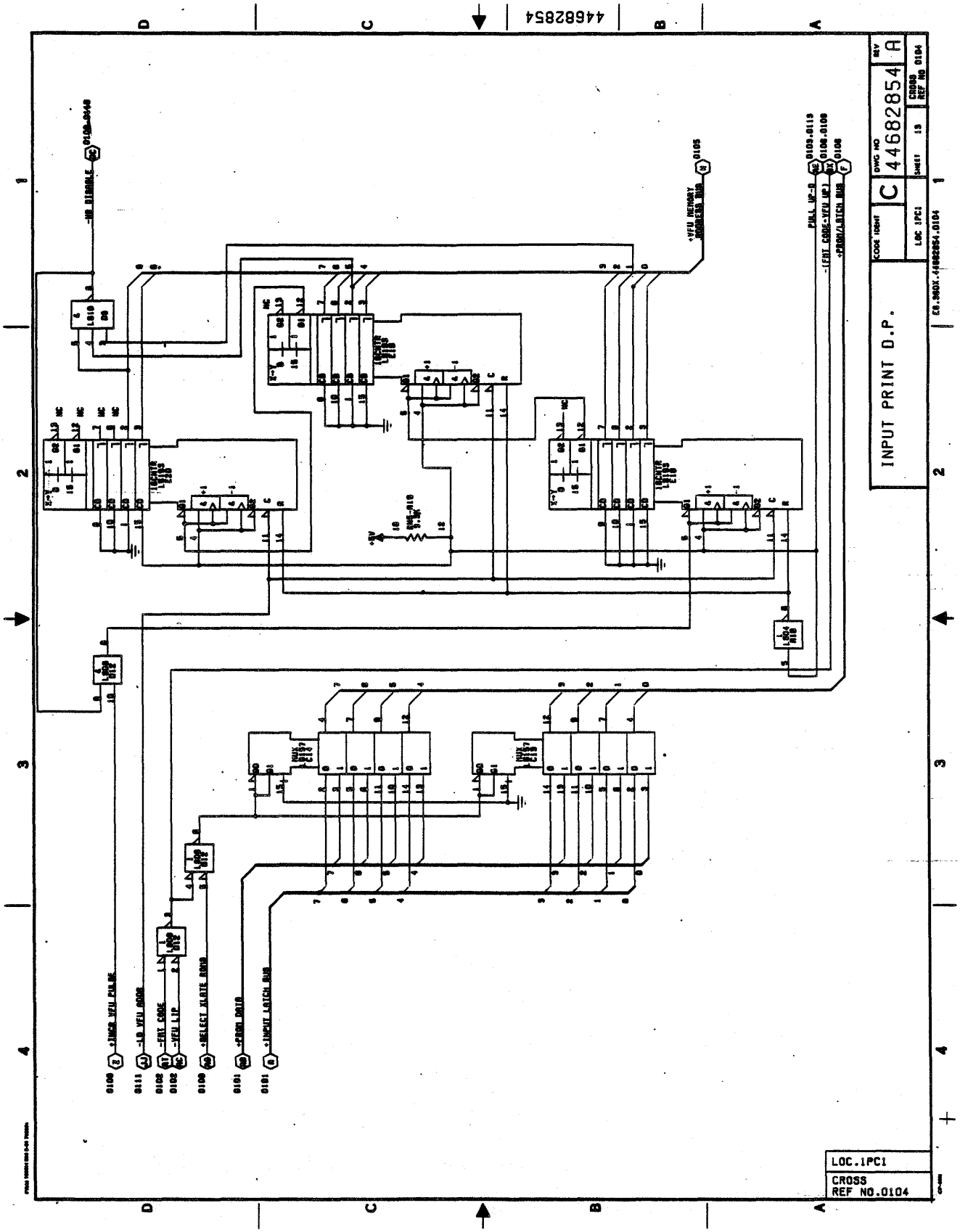
44682854
INPUT PRINT D.P.
C
44682854
A
LOC.1PC1
CROSS
REF NO.0104

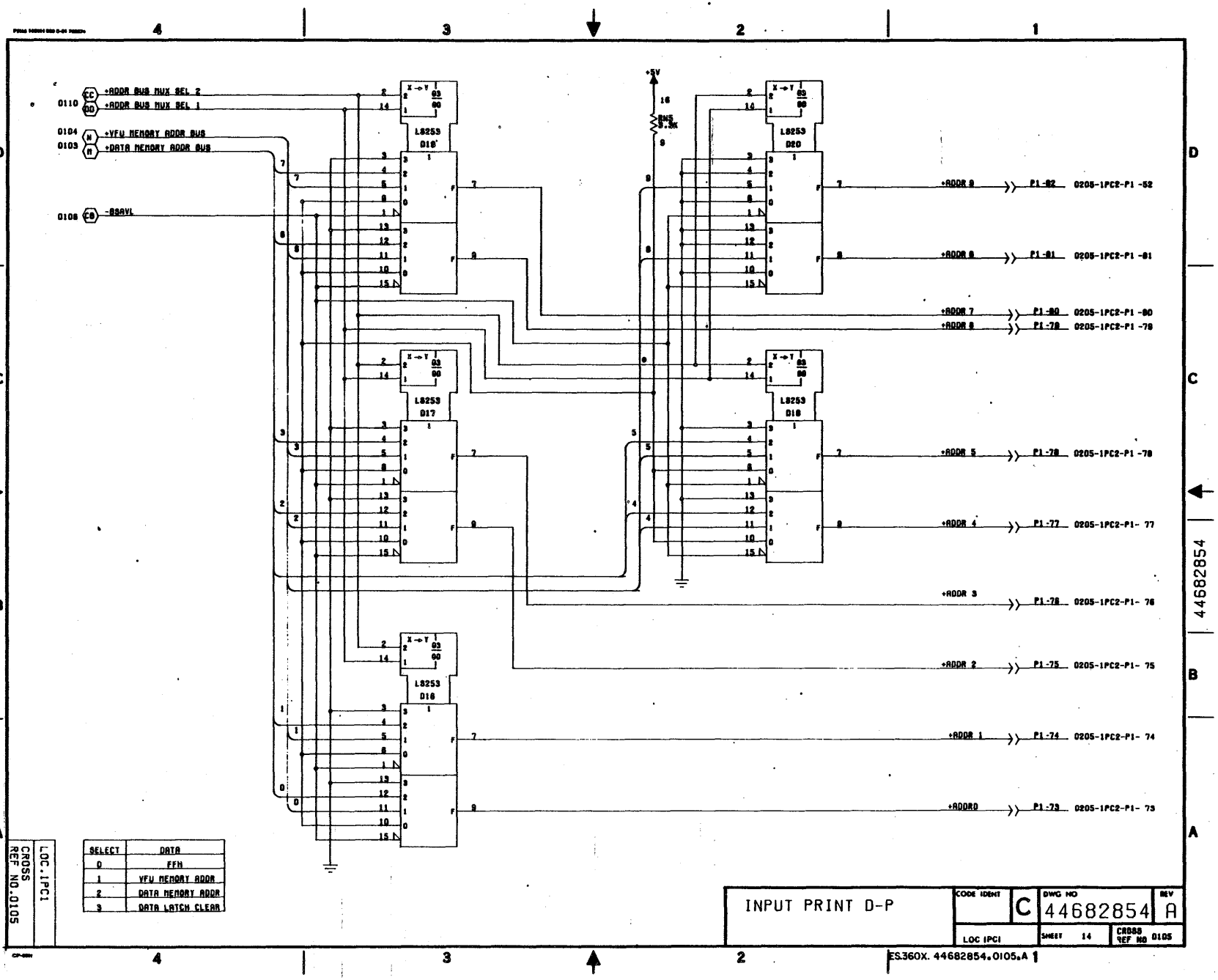
+ADDR BUS MUX SEL 2
+ADDR BUS MUX SEL 1
+VFU MEMORY ADDR BUS
+DATA MEMORY ADDR BUS
-BSAVL
L8253 D18
L8253 D20
L8253 D17
L8253 D19
L8253 D16
+5V
+ADDR 8
+ADDR 6
+ADDR 7
+ADDR 5
+ADDR 4
+ADDR 3
+ADDR 2
+ADDR 1
+ADDR0
P1-82
P1-81
P1-80
P1-79
P1-78
P1-77
P1-76
P1-75
P1-74
P1-73
0205-1PC2-P1 -82
0205-1PC2-P1 -81
0205-1PC2-P1 -80
0205-1PC2-P1 -79
0205-1PC2-P1 -78
0205-1PC2-P1- 77
0205-1PC2-P1- 76
0205-1PC2-P1- 75
0205-1PC2-P1- 74
0205-1PC2-P1- 73
SELECT
DATA
0
FFH
1
VFU MEMORY ADDR
2
DATA MEMORY ADDR
3
DATA LATCH CLEAR
CROSS REF NO.0105
LOC.IPC1
INPUT PRINT D-P
CODE IDENT
C
DWG NO
44682854
REV
A
LOC IPC1
SHEET 14
CROSS REF NO 0105
ES360X. 44682854.0105.A 1

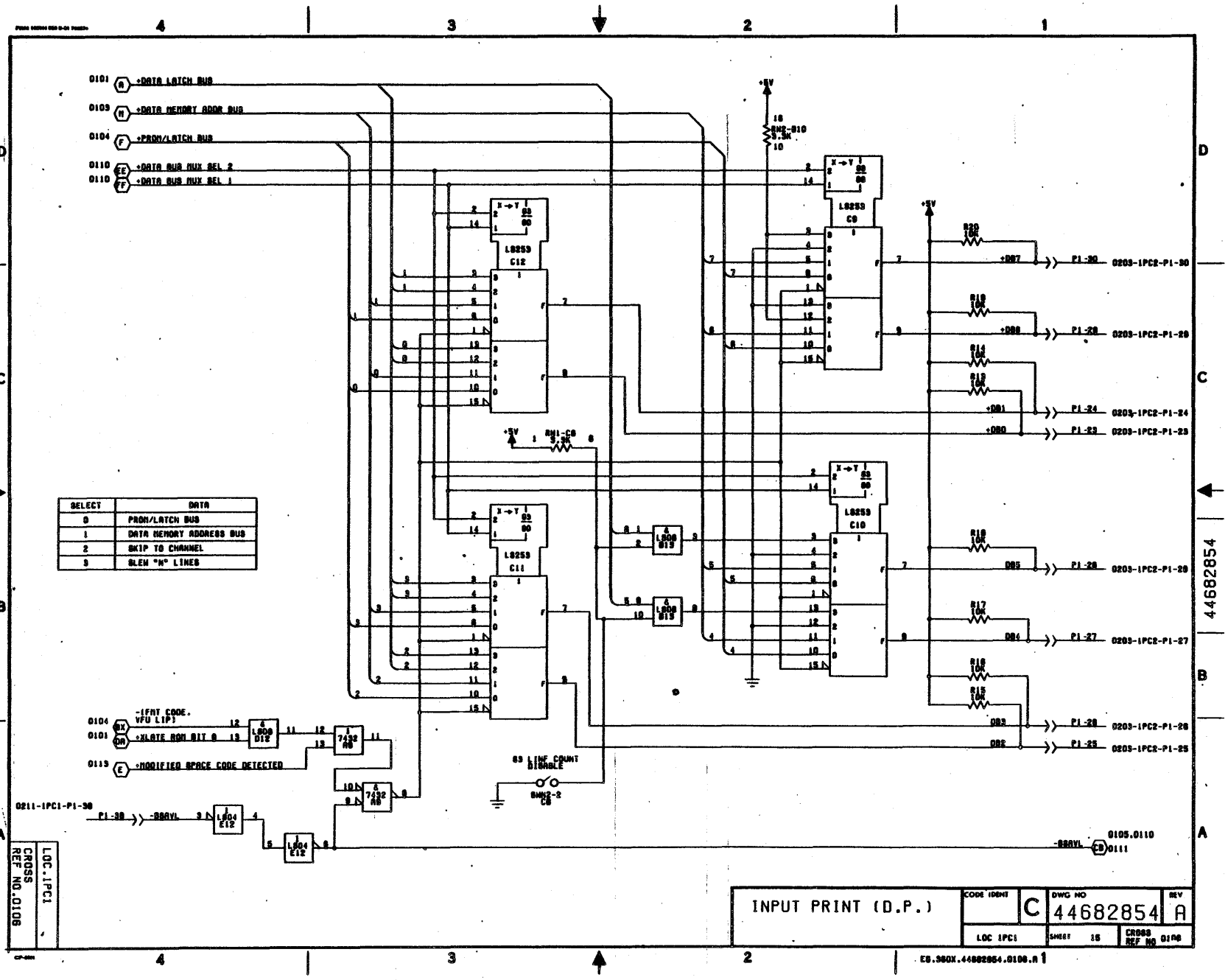

SELECT	DATA
0	PROM/LATCH BUS
1	DATA MEMORY ADDRESS BUS
2	SKIP TO CHANNEL
3	SLEW "N" LINES

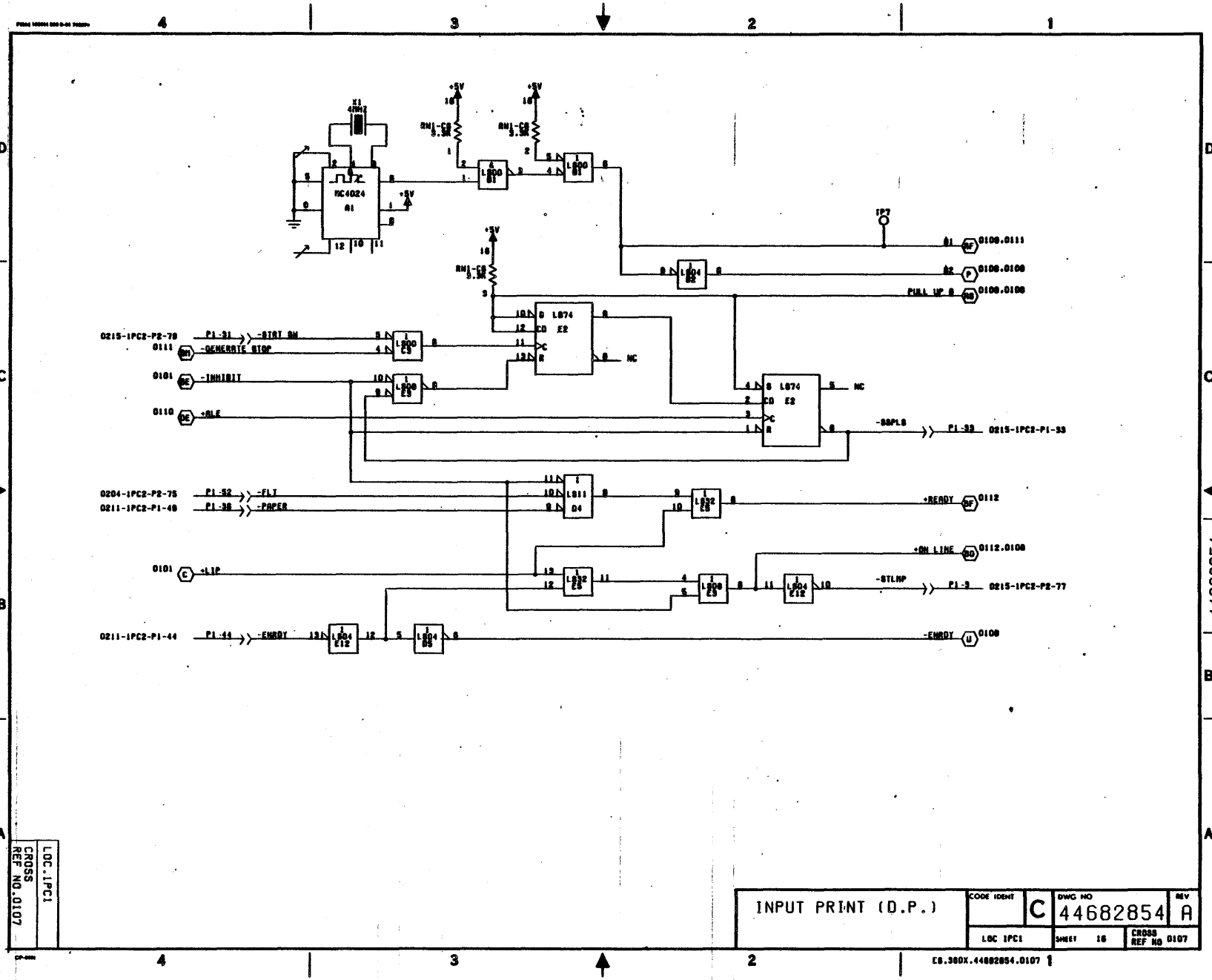

INPUT PRINT (D.P.)
CODE IDENT
C
DWG NO
44682854
REV
A
LOC IPC1
SHEET 16
CROSS REF NO 0107
ES.360X.44682854.0107
LOC.IPC1
CROSS REF NO.0107
44682854
MC4024
A1
X1
4MHZ
+5V
RN1-C8 3.3K
L800 B1
L804 B2
L874 E2
L800 C3
L808 E3
L811 D4
L832 E5
L804 E12
L804 D5
IP7
0109.0111
0109.0108
PULL UP 0
0215-IPC2-P2-78
P1-31
-START SW
0111
-GENERATE STOP
0101
-INHIBIT
0110
+ALE
-SSPLS
P1-33
0215-IPC2-P1-33
0204-IPC2-P2-75
P1-52
-FLT
0211-IPC2-P1-49
P1-36
-PAPER
+READY
0112
+ON LINE
0112.0108
0101
+LIP
-STLMP
P1-3
0215-IPC2-P2-77
0211-IPC2-P1-44
P1-44
-ENRDY
0108

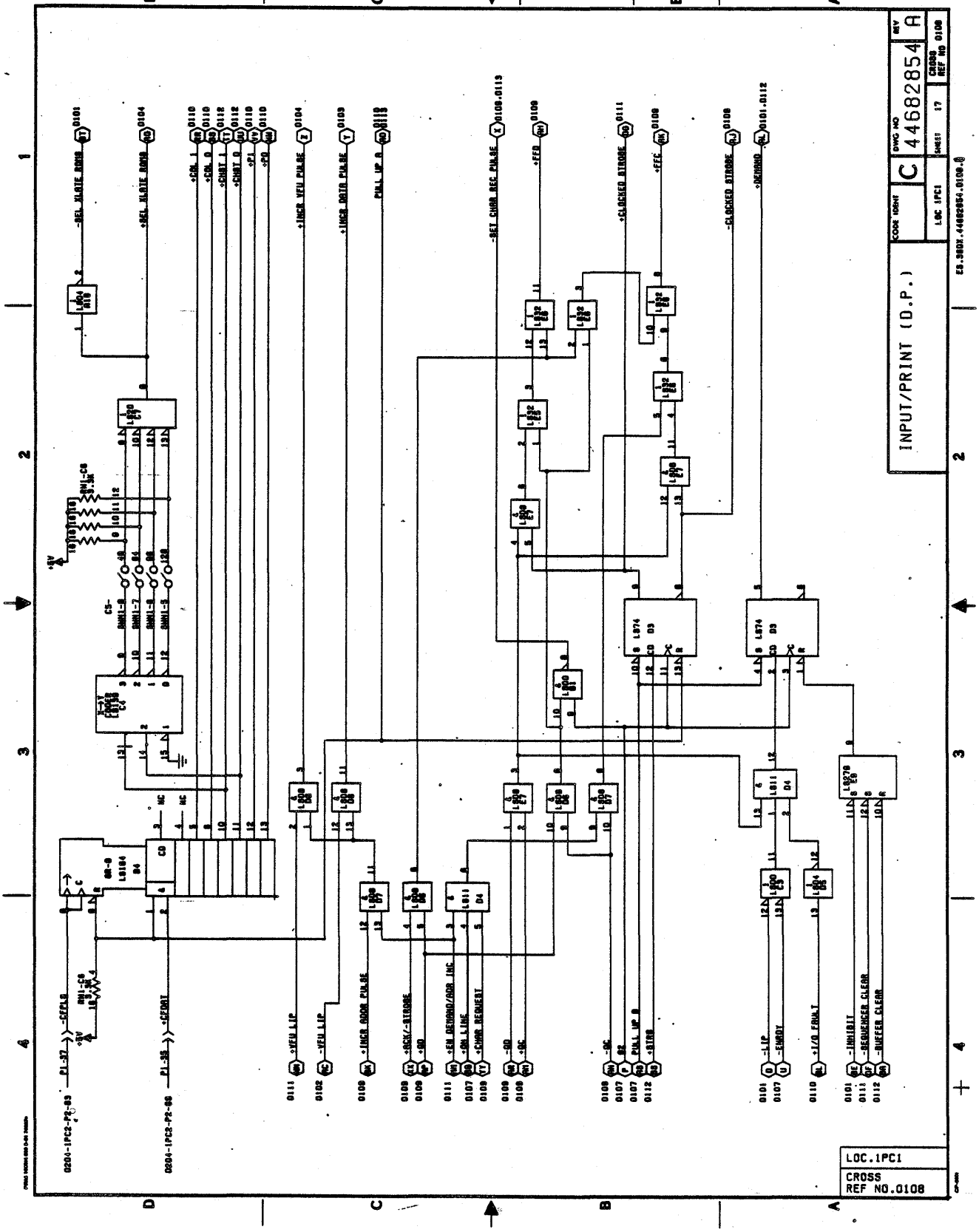
INPUT/PRINT (D.P.)
C 44682854 A
LOC.1PC1
CROSS REF NO.0108

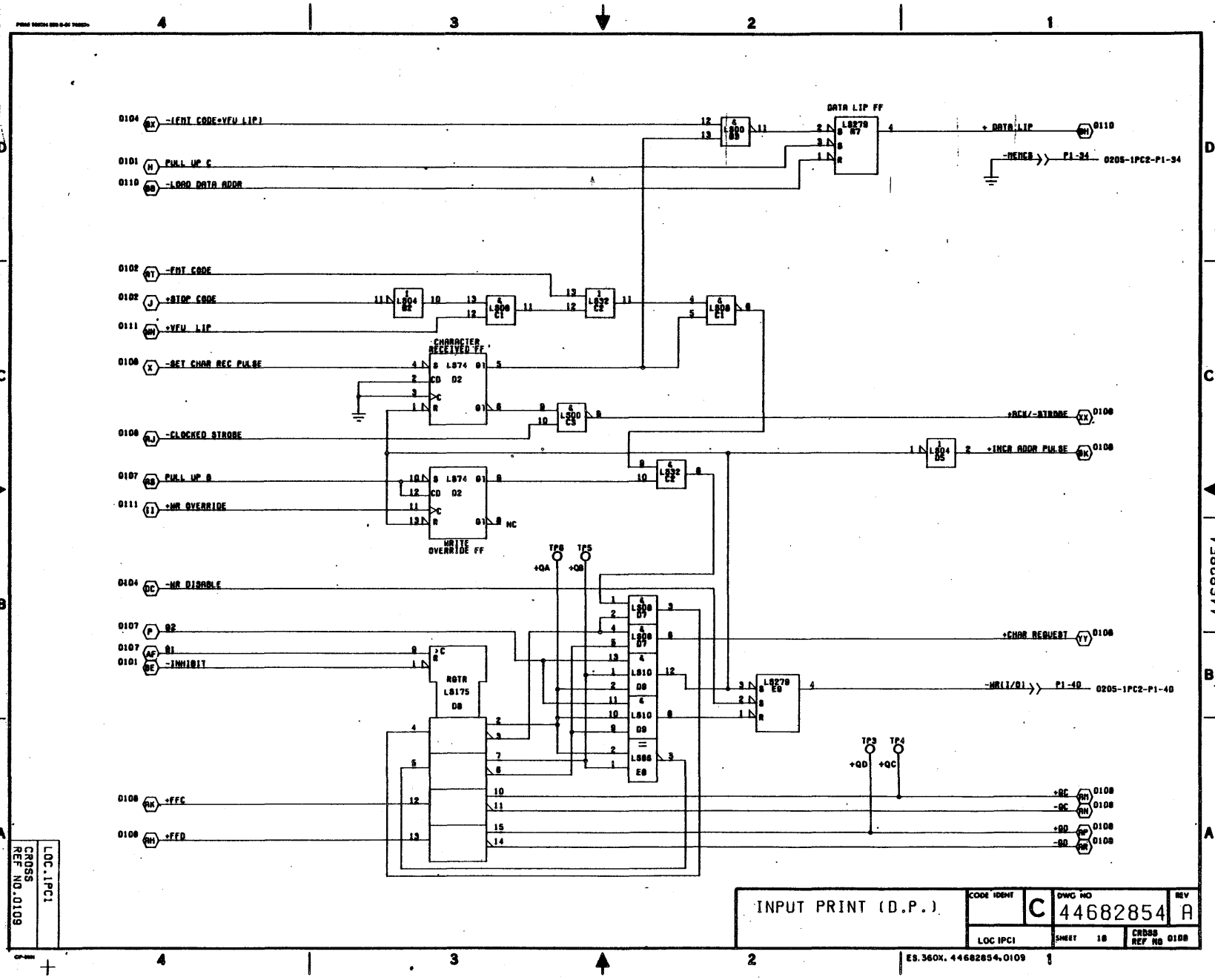
DATA LIP FF
0104 BX -(FNT CODE+VFU LIP)
0101 H PULL UP C
0110 BB -LOAD DATA ADDR
+DATA LIP
0110 BH
-MENCB
P1-34
0205-1PC2-P1-34
0102 BT -FNT CODE
0102 J +STOP CODE
0111 BM +VFU LIP
CHARACTER RECEIVED FF
0108 X -SET CHAR REC PULSE
+ACK/-STROBE
0108 VX
0108 RJ -CLOCKED STROBE
+INCR ADDR PULSE
0108 BK
0107 RB PULL UP B
0111 U +WR OVERRIDE
WRITE OVERRIDE FF
TP6 TP5
+QA +QB
0104 DC -WR DISABLE
0107 P B2
0107 AF B1
0101 BE -INH1@1T
+CHAR REQUEST
0108 YY
-WR(1/B1)
P1-40
0205-1PC2-P1-40
ROTR LS175 D8
TP3 TP4
+QD +QC
0108 RK +FFC
0108 RH +FFD
+QC
-QC
+QD
-QD
0108 RM
0108 RN
0108 RP
0108 RR
INPUT PRINT (D.P.)
CODE IDENT C
DWG NO 44682854
REV A
LOC IPC1
SHEET 18
CROSS REF NO 0108
ES.360X.44682854.0109
CROSS REF NO.0109
LOC.1PC1

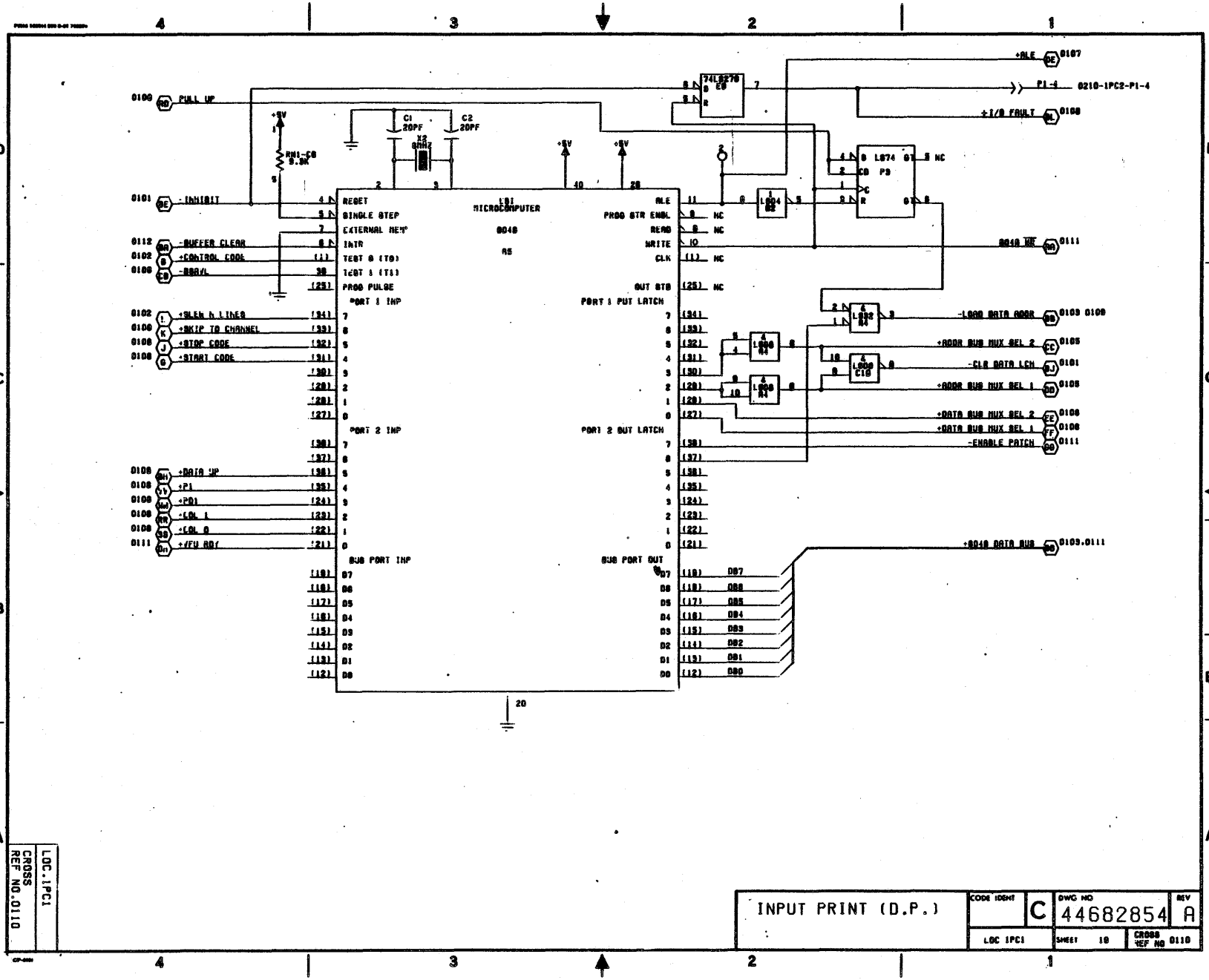
INPUT PRINT (D.P.)
CODE IDENT C
DWG NO 44682854
REV A
LOC IPC1
SHEET 18
CROSS REF NO 0110
CROSS REF NO.0110
LOC.IPC1
PULL UP
-INHIBIT
-BUFFER CLEAR
+CONTROL CODE
-BBRVL
+SLEW A LINES
+SKIP TO CHANNEL
+STOP CODE
+START CODE
+DATA UP
+P1
+P01
-LOL 1
-LOL 0
+/FU RDY
C1 20PF
C2 20PF
X2 6MHz
RN1-C8 8.2K
LBI MICROCOMPUTER 8048 A5
RESET
SINGLE STEP
EXTERNAL MEM
INTR
TEST 0 (T0)
TEST 1 (T1)
PROG PULSE
PORT 1 INP
PORT 2 INP
BUS PORT INP
PORT 1 OUT LATCH
PORT 2 OUT LATCH
BUS PORT OUT
ALE
PROG STR ENBL
READ
WRITE
CLK
OUT STB
+ALE
P1-4 0210-1PC2-P1-4
+I/O FAULT
8048 WR
-LOAD DATA ADDR
+ADDR BUS MUX SEL 2
-CLR DATA LCH
+ADDR BUS MUX SEL 1
+DATA BUS MUX SEL 2
+DATA BUS MUX SEL 1
-ENABLE PATCH
+8048 DATA BUS
74LS279
LS74
LS04
LS32
LS08
LS00

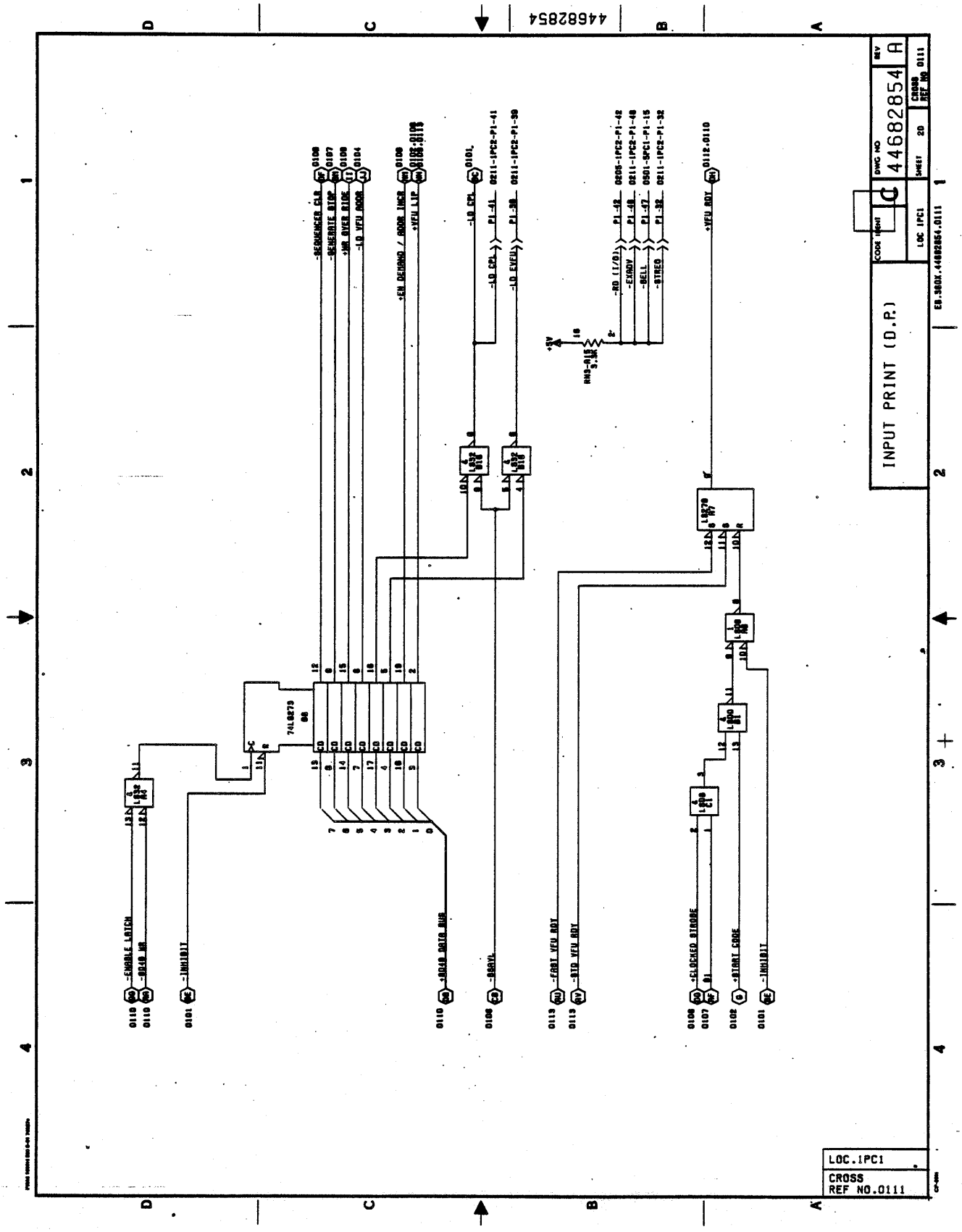
44682854
INPUT PRINT (D.P.)
44682854
A
LOC.1PC1
CROSS
REF NO.0111

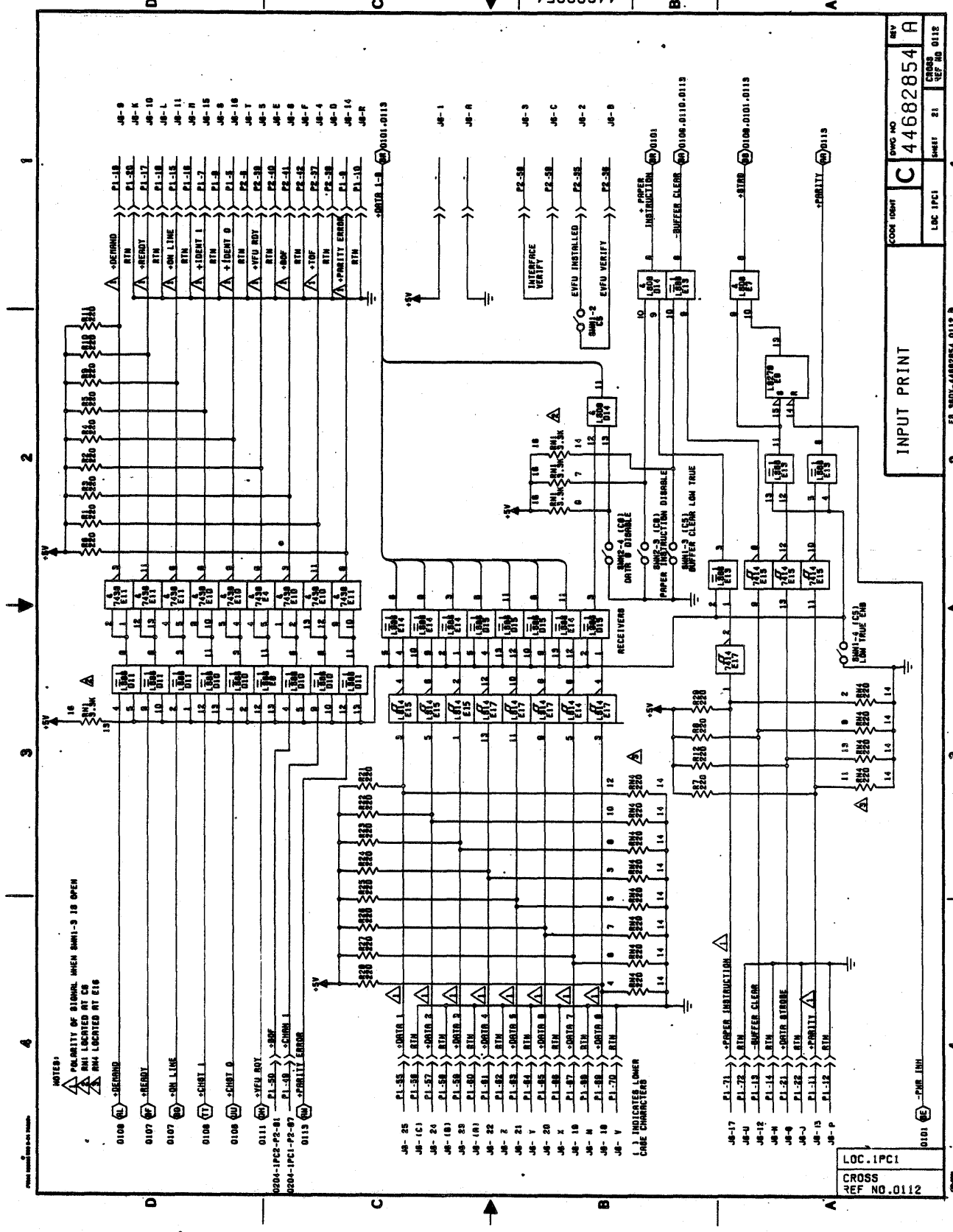
INPUT PRINT
44682854
LOC.1PC1
CROSS REF NO.0112

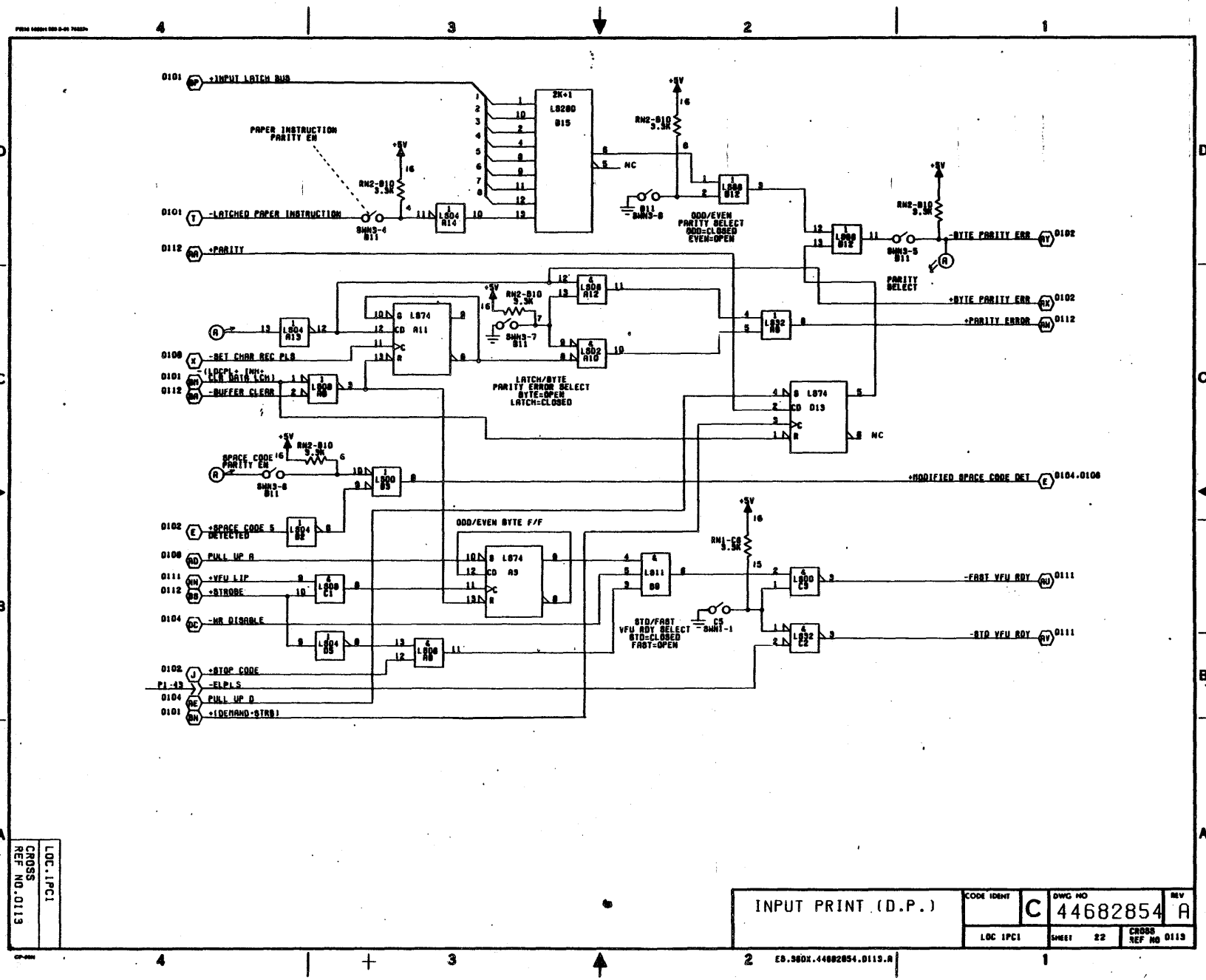
0101 +INPUT LATCH BUS
PAPER INSTRUCTION PARITY EN
0101 -LATCHED PAPER INSTRUCTION
0112 +PARITY
0108 -SET CHAR REC PLS
0101 -BUFFER CLEAR
SPACE CODE PARITY EN
0102 +SPACE CODE 5 DETECTED
0108 PULL UP A
0111 +VFU LIP
0112 +STROBE
0104 -WR DISABLE
0102 +STOP CODE
-ELPLS
0104 PULL UP A
0101 +(DEMAND-STRB)
ODD/EVEN PARITY SELECT ODD=CLOSED EVEN=OPEN
-BYTE PARITY ERR 0102
PARITY SELECT
+BYTE PARITY ERR 0102
+PARITY ERROR 0112
LATCH/BYTE PARITY ERROR SELECT BYTE=OPEN LATCH=CLOSED
+MODIFIED SPACE CODE DET 0104,0106
ODD/EVEN BYTE F/F
STD/FAST VFU RDY SELECT STD=CLOSED FAST=OPEN
-FAST VFU RDY 0111
-STD VFU RDY 0111
INPUT PRINT (D.P.)
CODE IDENT C
DWG NO 44682854
REV A
LOC IPC1
SHEET 22
CROSS REF NO 0113
LOC.IPC1
CROSS REF NO.0113
EB.360X.44682854.0113.A

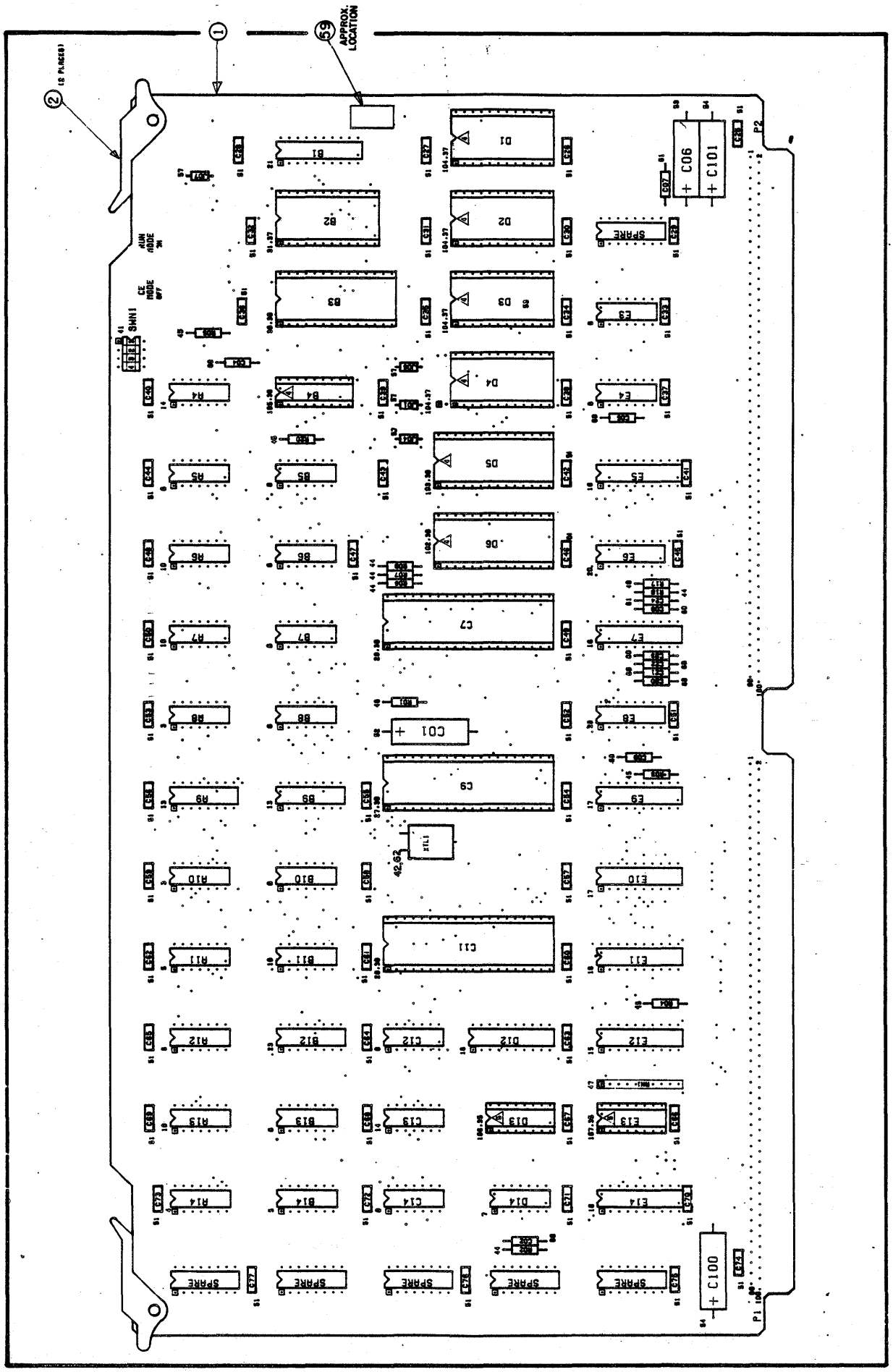

RS-232 PERSONALITY MODULE

CROSS REF NO.: 0800
MODULE LOC: 1PC1
SCHEMATIC NO: 44690816

PART NO: 44690817
REV: 01
SHT: 02

MODULE INPUTS

SOURCE	SIGNAL NAME	MODULE CROSS REF NO.
0500/5PC1	10MS0 (-)	0808/P2-92
0500/5PC1	10MS1 (-)	0808/P2-88
0500/5PC1	10MS2 (-)	0808/P2-84
0500/5PC1	10RST (-)	0808/P2-86
0700/6PC1	12 (+)	0808/P1-69
0600/1PC6	5V (+)	0806/P1-97
0600/1PC6	5V (+)	0806/P1-98
0600/1PC6	5V (+)	0806/P1-99
0600/1PC6	5V (+)	0806/P1-100
0600/1PC6	5V (+)	0806/P2-3
0600/1PC6	5V (+)	0806/P2-4
0200/1PC2	BOF (+)	0808/P1-50
0200/1PC2	BSAVL (-)	0811/P2-38
0500/5PC1	BUF CLR (-)	0808/P1-78
0200/1PC2	CFDAT (+)	0810/P1-35
0200/1PC2	CFPLS (-)	0810/P1-37
0200/1PC2	CH1 (+)	0808/P1-49
0200/1PC2	CLK (2MHZ) (-)	0805/P1-48
0700/6PC1	CTS (CB/CS) (-)	0803/P1-15
0700/6PC1	DSR (CC/DM) (-)	0803/P1-19
0200/1PC2	ELPLS (-)	0807/P1-43
0200/1PC2	ENRDY (-)	0801/P1-44
0200/1PC2	FLT (-)	0808/P1-52
0600/1PC6	GND	0806/P1-1
0600/1PC6	GND	0806/P1-2
0600/1PC6	GND	0806/P1-91
0600/1PC6	GND	0806/P1-92
0600/1PC6	GND	0806/P1-95
0600/1PC6	GND	0806/P1-96
0600/1PC6	GND	0806/P2-1
0600/1PC6	GND	0806/P2-2
0600/1PC6	GND	0806/P2-19
0600/1PC6	GND	0806/P2-20
0600/1PC6	GND	0806/P2-49
0600/1PC6	GND	0806/P2-50
0600/1PC6	GND	0806/P2-69
0600/1PC6	GND	0806/P2-70
0600/1PC6	GND	0806/P2-99
0600/1PC6	GND	0806/P2-100
0600/1PC6	GND	0807/P1-6
0600/1PC6	GND	0807/P1-8

CROSS REF NO.: 0800 PART NO: 44690817
MODULE LOC: 1PC1 REV: 01
SCHEMATIC NO: 44690816 SHT: 03

MODULE INPUTS
(continued)

SOURCE	SIGNAL NAME	MODULE CROSS REF NO.
0600/1PC6	GND	0807/P1-10
0600/1PC6	GND	0807/P1-12
0600/1PC6	GND	0807/P1-14
0600/1PC6	GND	0807/P1-16
0600/1PC6	GND	0807/P1-18
0600/1PC6	GND	0807/P1-20
0600/1PC6	GND	0807/P1-22
0600/1PC6	GND	0807/P1-56
0600/1PC6	GND	0807/P1-58
0600/1PC6	GND	0807/P1-60
0600/1PC6	GND	0807/P1-62
0600/1PC6	GND	0807/P1-64
0600/1PC6	GND	0807/P1-66
0600/1PC6	GND	0807/P1-68
0600/1PC6	GND	0807/P1-70
0600/1PC6	GND	0807/P1-72
0600/1PC6	GND	0807/P2-38
0600/1PC6	GND	0807/P2-40
0600/1PC6	GND	0807/P2-42
0600/1PC6	GND	0807/P2-44
0700/6PC1	INDATA (+)	0803/P1-5
0300/1PC3	INH (-)	0805/P1-54
0500/5PC1	OPTSEL (-)	0808/P2-90
0200/1PC2	PAPER ERR	0808/P1-36
0200/1PC2	PMIDX (-)	0801/P1-51
0700/6PC1	RDX (RD/BB) (-)	0803/P1-21
0700/6PC1	RING (-)	0803/P1-11
0700/6PC1	RLS (CF/RR) (-)	0803/P1-17
0700/6PC1	RSETIN (DD/RT) (-)	0810/P2-39
0700/6PC1	SP6 (+)	0803/P1-9
0700/6PC1	SP7 (+)	0803/P1-7
0200/1PC2	START SW (-)	0808/P1-31
0500/5PC1	STPOPT (-)	0808/P2-82
0700/6PC1	T SET IN (DB/ST) (-)	0810/P2-41
0700/6PC1	TEST (-)	0803/P1-13
0600/1PC6	VPWR (+)	0806/P2-7
0600/1PC6	VPWR (+)	0806/P2-8
0600/1PC6	VPWR RET	0806/P2-9
0600/1PC6	VPWR RET	0806/P2-10

CROSS REF NO.: 0800 PART NO: 44690817
MODULE LOC: 1PC1 REV: 01
SCHEMATIC NO: 44690816 SHT: 04

MODULE OUTPUTS

MODULE CROSS REF NO.	SIGNAL NAME	DESTINATION
0811/P2-96	10 FLT LED (-)	0500/5PC1
0811/P2-76	10 SET LED (-)	0500/5PC1
0811/P2-98	10 TEST LED (-)	0500/5PC1
0810/P1-73	ADR0	0200/1PC2
0810/P1-74	ADR1	0200/1PC2
0810/P1-75	ADR2	0200/1PC2
0810/P1-76	ADR3	0200/1PC2
0810/P1-77	ADR4	0200/1PC2
0810/P1-78	ADR5	0200/1PC2
0810/P1-79	ADR6	0200/1PC2
0810/P1-80	ADR7	0200/1PC2
0810/P1-81	ADR8	0200/1PC2
0810/P1-82	ADR9	0200/1PC2
0811/P1-47	BELL (-)	0500/5PC1
0811/P2-97	BUFFER CLEAR LED (-)	0500/5PC1
0809/P1-23	DB0	0200/1PC2
0809/P1-24	DB1	0200/1PC2
0809/P1-25	DB2	0200/1PC2
0809/P1-26	DB3	0200/1PC2
0809/P1-27	DB4	0200/1PC2
0809/P1-28	DB5	0200/1PC2
0809/P1-29	DB6	0200/1PC2
0809/P1-30	DB7	0200/1PC2
0802/P2-35	DTR (-)	0700/6PC1
0807/P1-46	EXADV (-)	0200/1PC2
0805/P1-81	INH (-)	0700/6PC1
0807/P1-4	IOFLT (+)	0200/1PC2
0805/P2-74	IOXFRLED (-)	0500/5PC1
0807/P1-41	LDCPL (-)	0200/1PC2
0807/P1-39	LDEVFU (-)	0200/1PC2
0807/P1-45	LIP (-)	0200/1PC2
0811/P1-65	LOCAL LBK (-)	0700/6PC1
0809/P1-42	RD (-)	0200/1PC2
0811/P1-57	REM LBK (-)	0700/6PC1
0811/P2-58	REV CHAN (-)	0700/6PC1
0802/P2-36	RTS (-)	0700/6PC1
0811/P2-43	SPARE 1	0700/6PC1
0811/P2-59	SPARE 2	0700/6PC1
0811/P2-94	SPARE LED 2 (-)	0500/5PC1
0807/P1-33	SSPLS (-)	0200/1PC2
0807/P1-3	STLMP (-)	0200/1PC2
0807/P1-32	STREQ (-)	0200/1PC2
0802/P2-37	TDATA (+)	0700/6PC1
0807/P1-63	TSETOUT (-)	0700/6PC1
0806/P1-67	VPWR (+)	0700/6PC1
0809/P1-40	WR (-)	0200/1PC2
0807/P1-34	XBUFSEL (-)	0200/1PC2

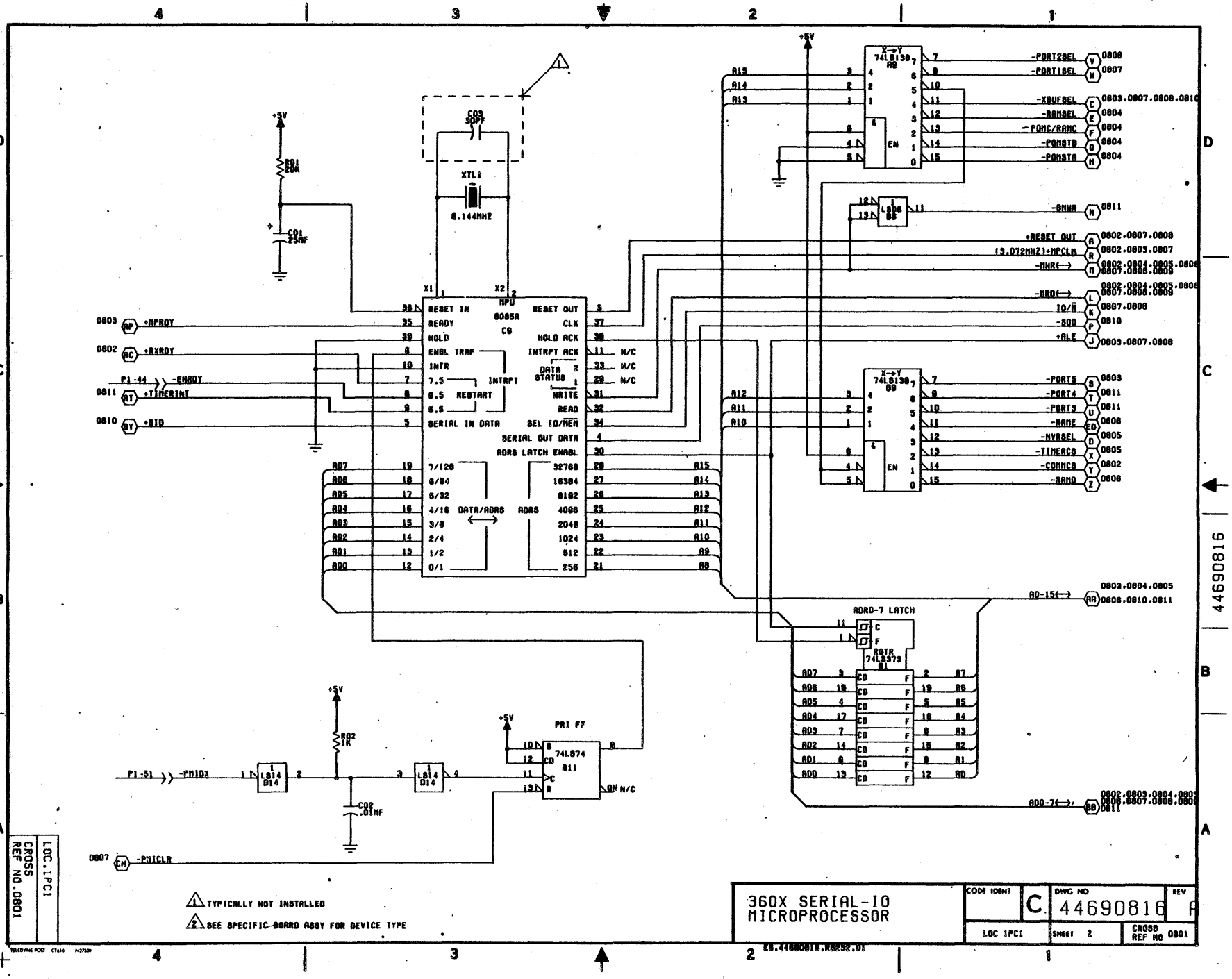

360X SERIAL-IO
MICROPROCESSOR
CODE IDENT
C
DWG NO
44690816
REV
A
LOC 1PC1
SHEET 2
CROSS REF NO 0801
TYPICALLY NOT INSTALLED
SEE SPECIFIC BOARD ASSY FOR DEVICE TYPE
LOC.1PC1
CROSS REF NO.0801
44690816
X1
X2
MPU
8085A
C9
RESET IN
READY
HOLD
ENBL TRAP
INTR
7.5
6.5
5.5
SERIAL IN DATA
RESET OUT
CLK
HOLD ACK
INTRPT ACK
DATA STATUS
WRITE
READ
SEL IO/MEM
SERIAL OUT DATA
ADRS LATCH ENABL
INTRPT
RESTART
DATA/ADRS
ADRS
+MPRDY
+RXRDY
-ENRDY
+TIMERINT
+SID
P1-44
P1-51
-PMIDX
-PMICLR
CO3 30PF
XTL1
6.144MHZ
RO1 20K
CO1 25MF
RO2 1K
CO2 .01MF
PRI FF
74LS74
B11
X→Y
74LS138
A9
B9
EN
LS08
B6
ADRO-7 LATCH
ROTR
74LS373
B1
-PORT2SEL
-PORT1SEL
-XBUFSEL
-RAMSEL
-POMC/RAMC
-POMSTB
-POMSTA
-BMWR
+RESET OUT
(3.072MHZ)+MPCLK
-MWR
-MRD
IO/M
-SOD
+ALE
-PORT5
-PORT4
-PORT3
-RAME
-NVRSEL
-TIMERCS
-COMMCS
-RAMD
AD-15
AD-7

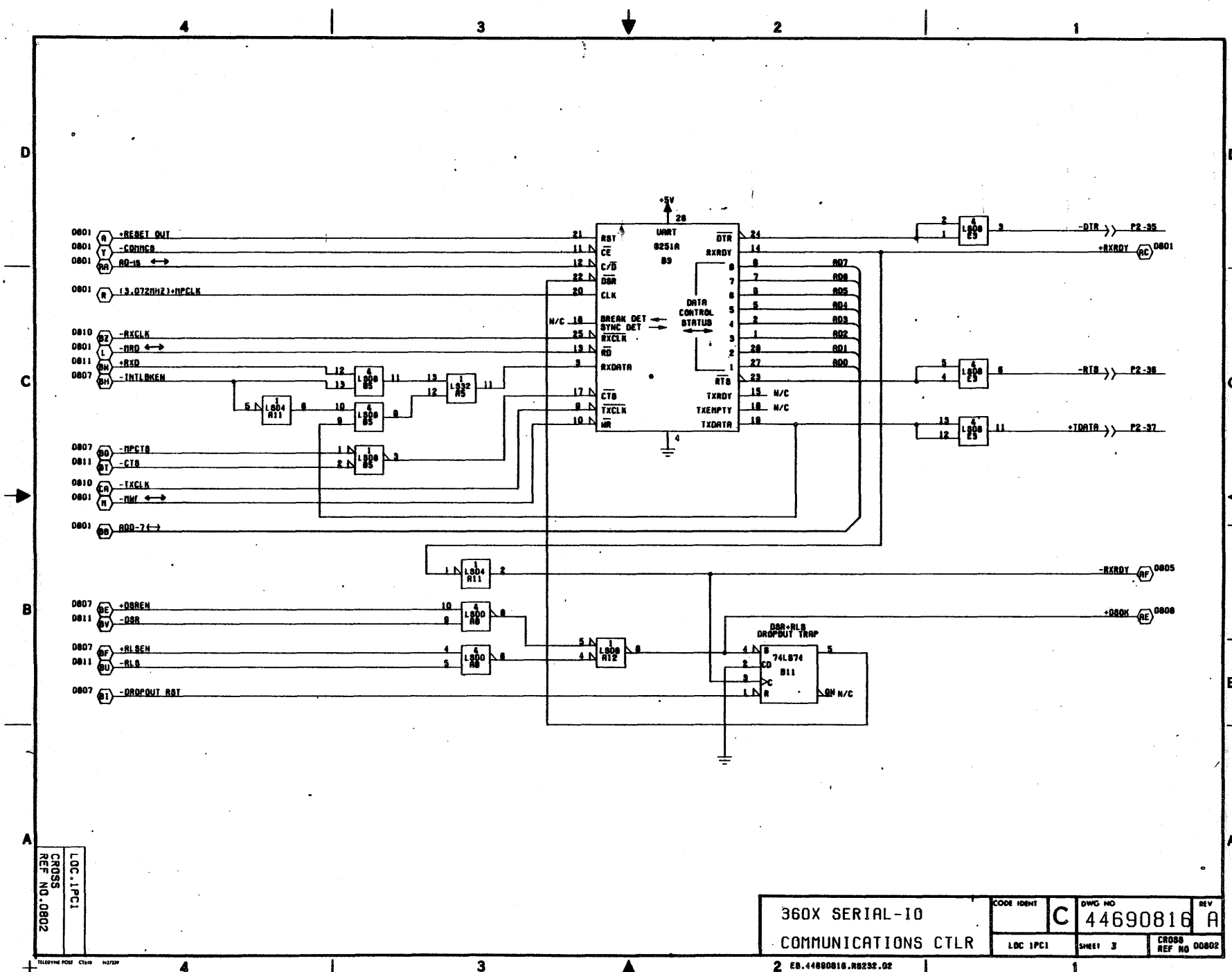

CROSS REF NO. 0802	LOC. 1PC1

360X SERIAL-IO COMMUNICATIONS CTLR	CODE IDENT C	DWG NO 44690816	REV A
	LOC 1PC1	SHEET 3	CROSS REF NO 0802

E8.44690816.RS232.02

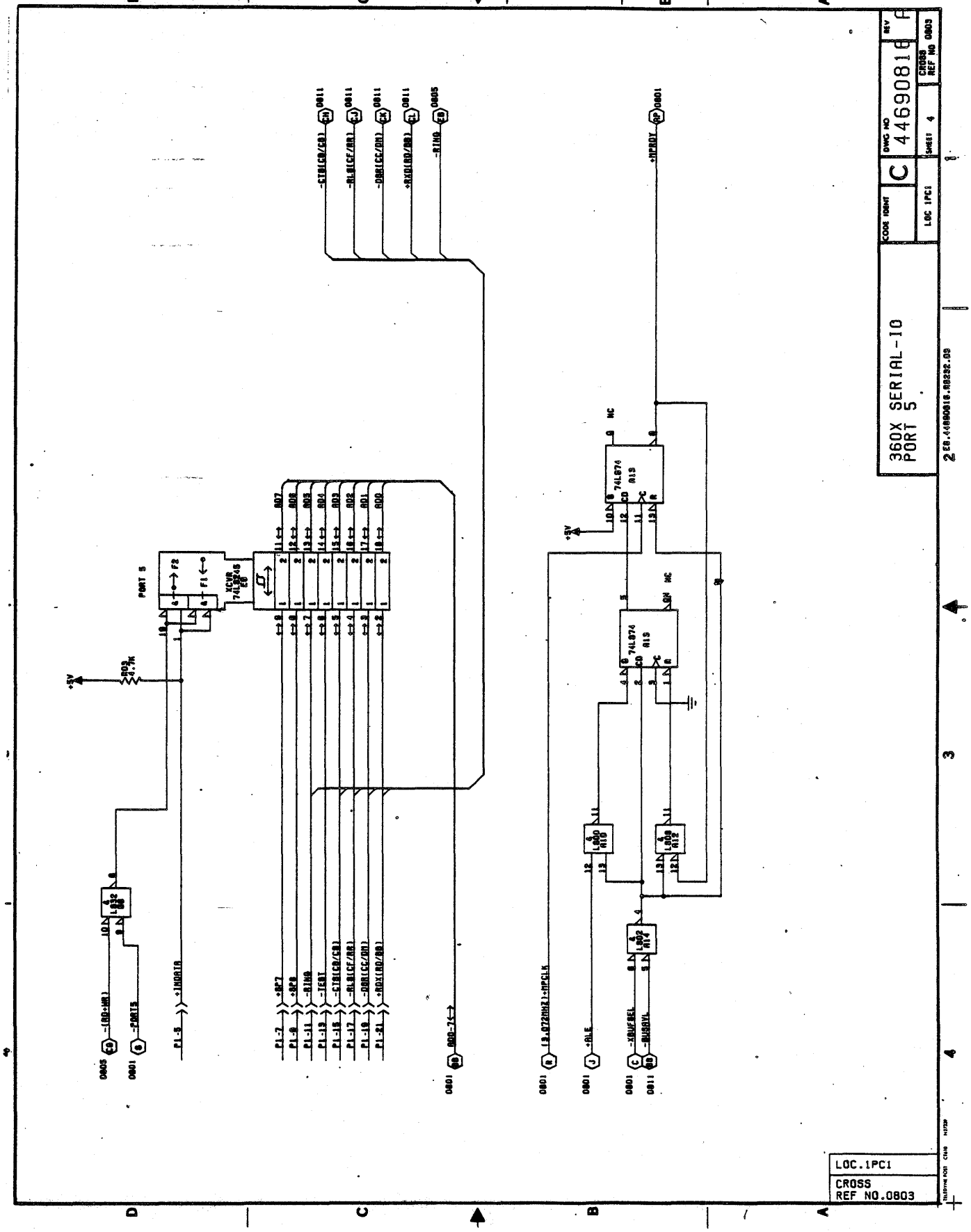
360X SERIAL-10
PORT 5
LOC.1PC1
CROSS
REF NO.0803
4469816

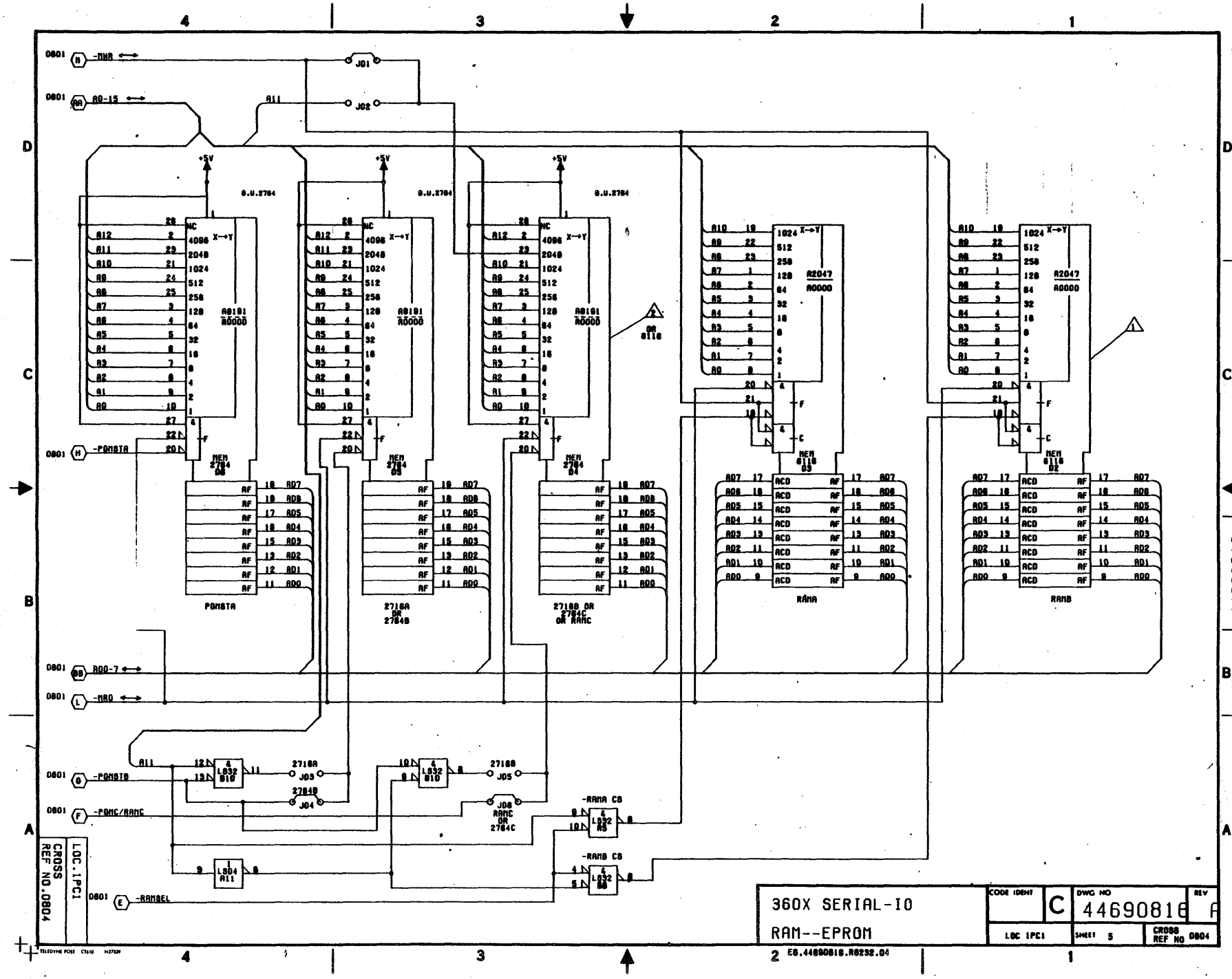

360X SERIAL-IO
RAM--EPROM
CODE IDENT
C
DWG NO
44690816
REV
A
LOC 1PC1
SHEET 5
CROSS REF NO 0804
ES.44690816.R6232.04
LOC.1PC1
CROSS REF NO.0804
-MWR
A0-15
-POMSTA
A0D-7
-MRD
-POMSTB
-POMC/RAMC
-RAMSEL
-RAMA CS
-RAMB CS
POMSTA
2716A OR 2764B
2716B OR 2764C OR RAMC
RAMA
RAMB
A8191 A0000
A2047 A0000
MEM 2764 D6
MEM 2764 D5
MEM 2764 D4
MEM 6116 D3
MEM 6116 D2
+5V

44690816

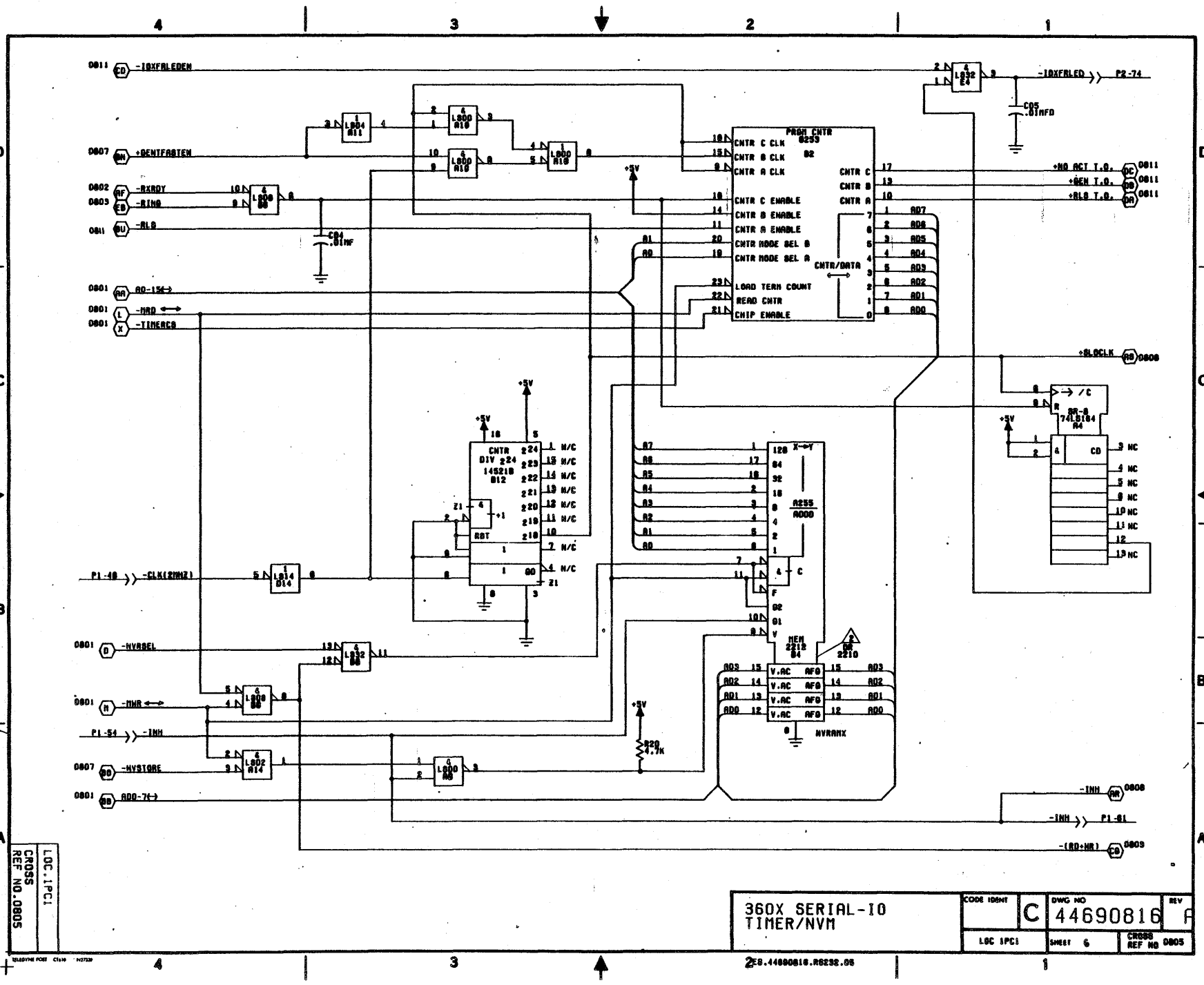

-IOXFRLEDEN
+GENTFASTEN
-RXRDY
-RING
-RLS
A0-15
-MRD
-TIMERCS
-CLK(2MHZ)
-NVRSEL
-MWR
-INH
-NVSTORE
A00-7
-IOXFRLED
P2-74
+NO ACT T.O.
+GEN T.O.
+RLS T.O.
+SLOCLK
-INH
P1-61
-(RD+WR)
PROM CNTR
8253
CNTR C CLK
CNTR B CLK
CNTR A CLK
CNTR C ENABLE
CNTR B ENABLE
CNTR A ENABLE
CNTR MODE SEL B
CNTR MODE SEL A
LOAD TERM COUNT
READ CNTR
CHIP ENABLE
CNTR/DATA
CNTR DIV 224
14521B
B12
A255
A000
MEM
2212
B4
NVRAMX
SR-8
74LS164
A4
LOC.1PC1
CROSS
REF NO.0805
360X SERIAL-IO
TIMER/NVM
CODE IDENT
C
DWG NO
44690816
REV
A
LOC 1PC1
SHEET 6
CROSS
REF NO 0805
44690816

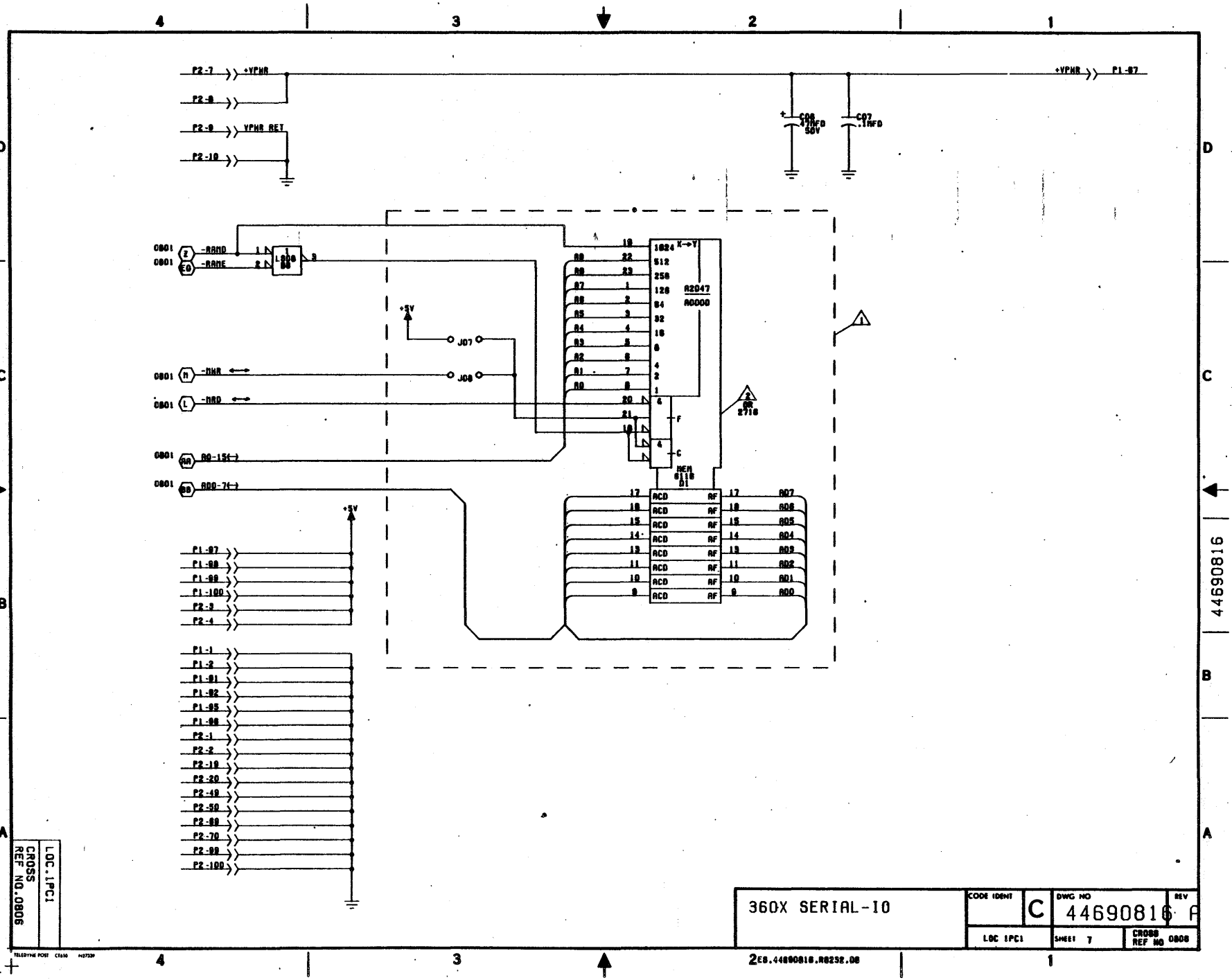
P2-7
+VPWR
P2-8
P2-9
VPWR RET
P2-10
+VPWR
P1-87
C08
47MFD
50V
C07
.1MFD
-RAMD
-RAME
+5V
J07
J08
-MWR
-MRD
A0-15(-)
AD0-7(-)
A2047
A0000
1024
512
256
128
64
32
16
8
4
2
1
P1-97
P1-98
P1-99
P1-100
P2-3
P2-4
P1-1
P1-2
P1-91
P1-92
P1-95
P1-96
P2-1
P2-2
P2-19
P2-20
P2-49
P2-50
P2-89
P2-70
P2-99
P2-100
CROSS REF NO.0806
LOC.1PC1
360X SERIAL-IO
CODE IDENT
C
DWG NO
44690816
REV
A
LOC 1PC1
SHEET 7
CROSS REF NO 0806
2EB.44690816.R825E.08

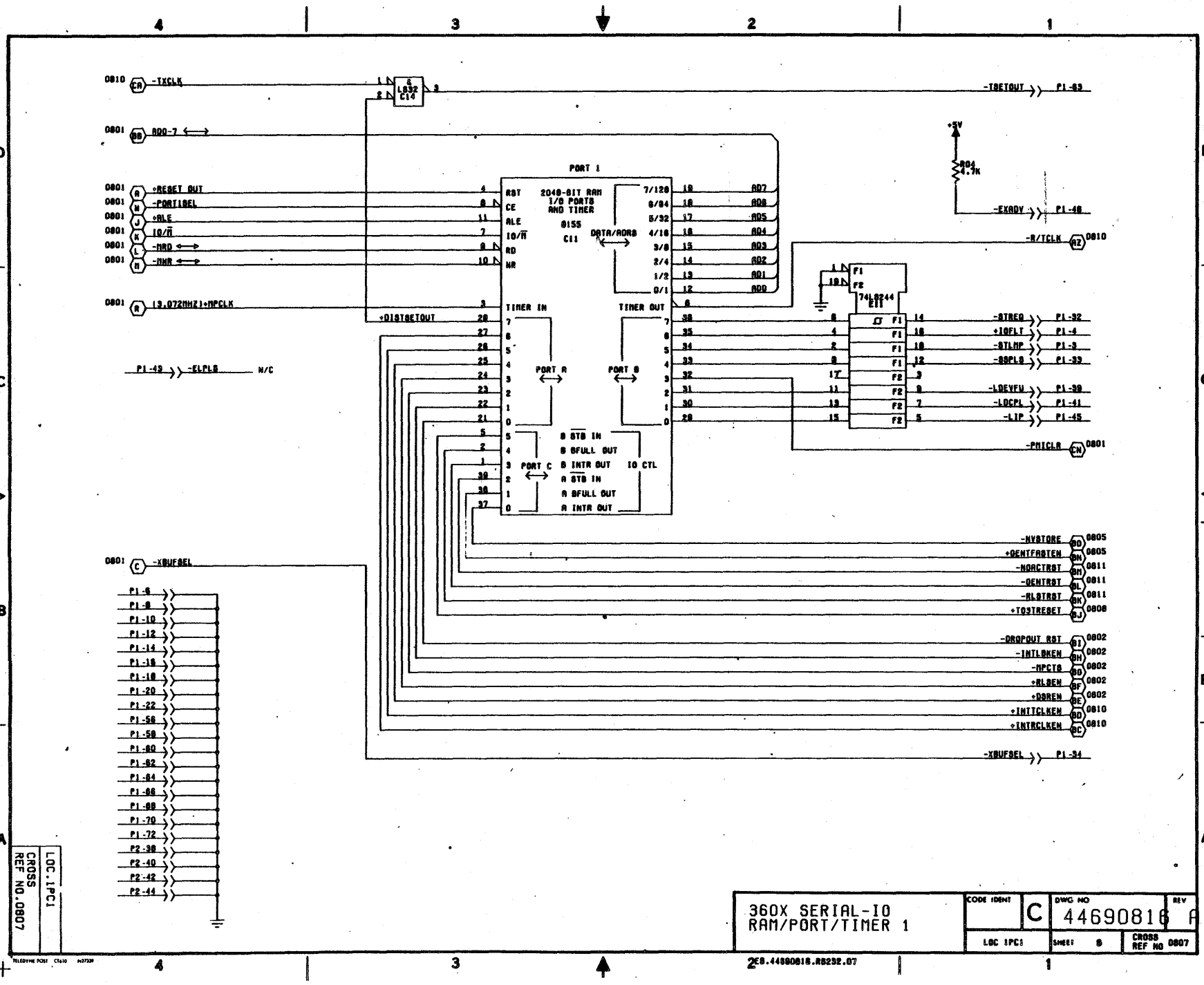
0810 CA -TXCLK
0801 BB AD0-7
0801 A +RESET OUT
0801 M -PORTIOEL
0801 J +ALE
0801 K IO/M
0801 L -MRD
0801 N -MWR
0801 R (3.072MHZ)+MPCLK
+DISTBETOUT
P1-49 -ELPLB N/C
PORT 1
2048-BIT RAM I/O PORTS AND TIMER 8155 C11
RST
CE
ALE
IO/M
RD
WR
DATA/ADRS
AD7
AD6
AD5
AD4
AD3
AD2
AD1
AD0
TIMER IN
TIMER OUT
PORT A
PORT B
PORT C
IO CTL
B STB IN
B BFULL OUT
B INTR OUT
A STB IN
A BFULL OUT
A INTR OUT
-TBETOUT P1-43
+5V
R84 4.7K
-EXADV P1-48
-A/TCLK AZ 0810
74LS244 E11
-BTREQ P1-32
+IOFLT P1-4
-BTLMP P1-3
-BBPLB P1-33
-LDEVFW P1-39
-LOCPL P1-41
-LIP P1-45
-PWICLR CN 0801
-MVSTORE BD 0805
+DENTFASTEN BH 0805
-NDACTRST BN 0811
-DENTRST BL 0811
-RLSTRST BK 0811
+TOSTRESET BJ 0808
-DROPOUT RST BJ 0802
-INTLBKEN BH 0802
-MPCTB BG 0802
+RLBEN BF 0802
+DBREN BE 0802
+INTTCLKEN BD 0810
+INTRCLKEN BC 0810
0801 C -XBUFSEL
-XBUFSEL P1-34
P1-6 P1-8 P1-10 P1-12 P1-14 P1-16 P1-18 P1-20 P1-22 P1-58 P1-58 P1-60 P1-62 P1-64 P1-66 P1-68 P1-70 P1-72 P2-38 P2-40 P2-42 P2-44
CROSS REF NO.0807
LOC.1PC1
360X SERIAL-IO
RAM/PORT/TIMER 1
CODE IDENT C
DWG NO 44690816
REV A
LOC 1PC1
SHEET 8
CROSS REF NO 0807
2E8.44690816.RS232.07

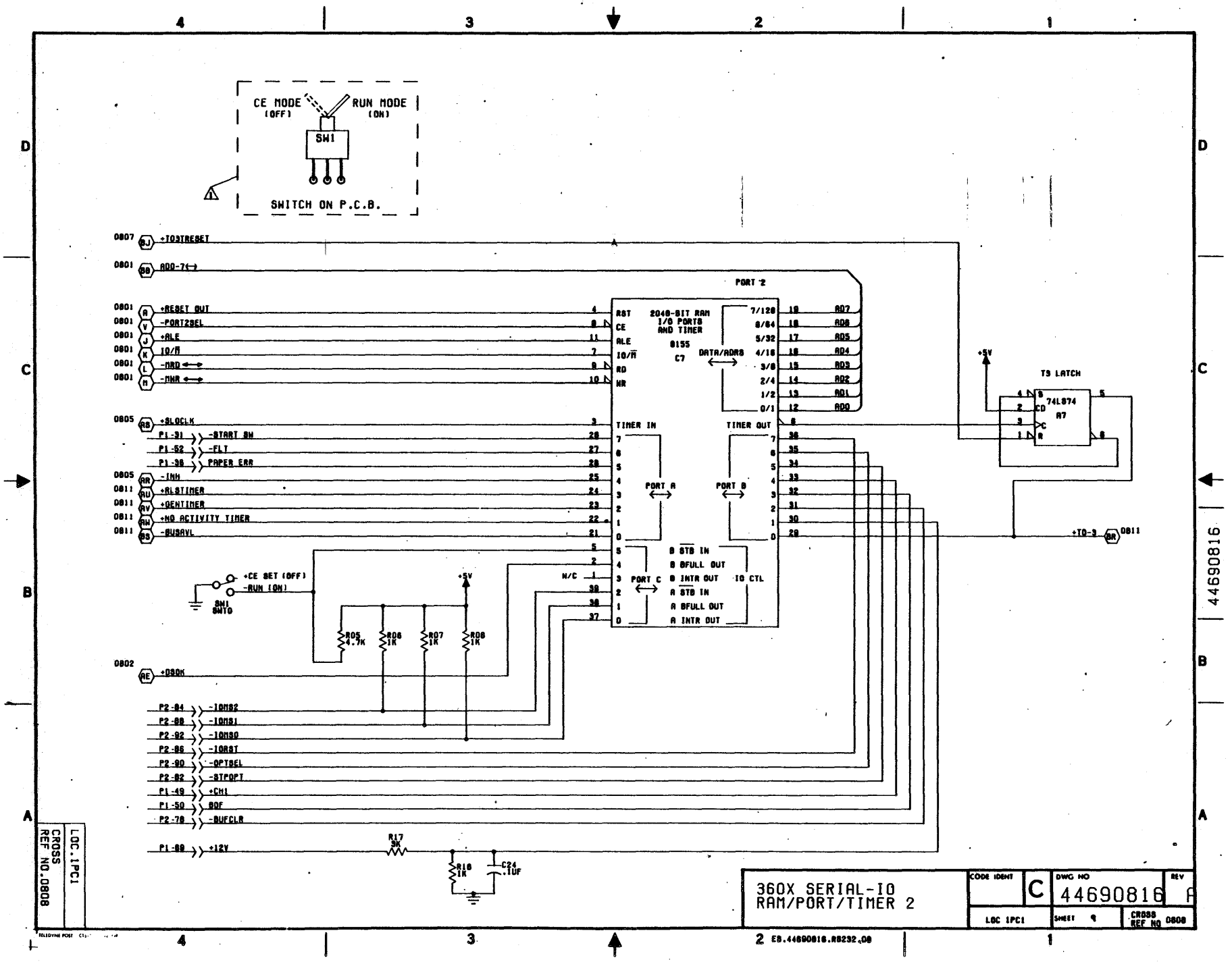
CE MODE (OFF)
RUN MODE (ON)
SW1
SWITCH ON P.C.B.
+IO3TRESET
ADD-7
PORT 2
+RESET OUT
-PORT2SEL
+ALE
IO/M
-RD
-WR
2048-BIT RAM I/O PORTS AND TIMER
8155
C7
DATA/ADRS
AD7
AD6
AD5
AD4
AD3
AD2
AD1
AD0
+5V
T9 LATCH
74LS74
A7
+SLOCLK
-START SW
-FLT
PAPER ERR
-INH
+RLSTIMER
+GENTIMER
+NO ACTIVITY TIMER
-BUSAVL
TIMER IN
TIMER OUT
PORT A
PORT B
PORT C
B STB IN
B BFULL OUT
B INTR OUT
IO CTL
A STB IN
A BFULL OUT
A INTR OUT
+T0-9
+CE SET (OFF)
-RUN (ON)
SW1 SWTD
R05 4.7K
R06 1K
R07 1K
R08 1K
+DSDK
-IOMS2
-IOMS1
-IOMS0
-IORST
-OPTSEL
-STPOPT
+CH1
DDF
-BUFCLR
+12V
R17 8K
R18 1K
C24 .1UF
CROSS REF NO.0808
LOC.1PC1
360X SERIAL-IO RAM/PORT/TIMER 2
CODE IDENT
C
DWG NO
44690816
REV
A
LOC 1PC1
SHEET 9
CROSS REF NO 0808
2 ES.44690816.RS232.08

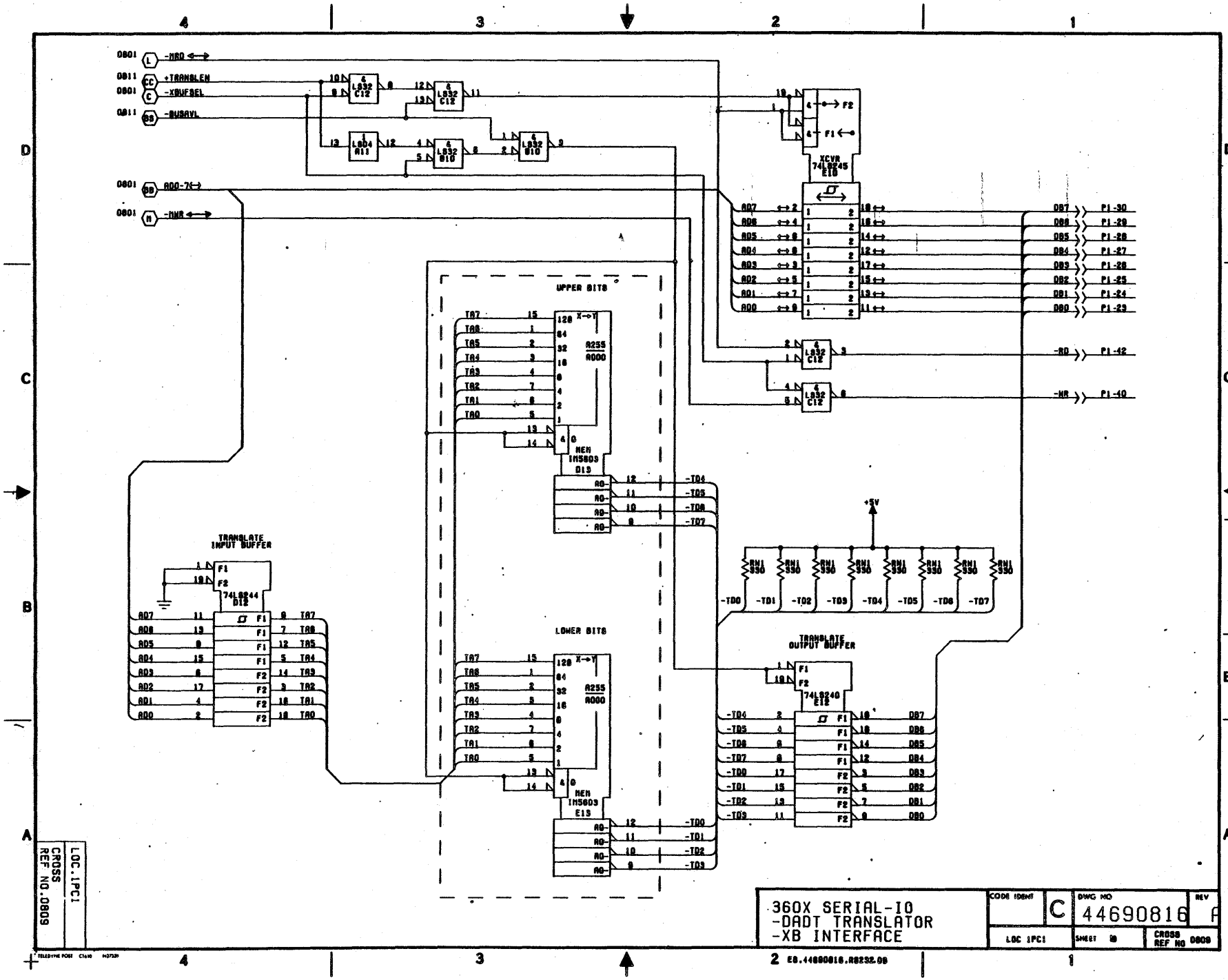
-MRD
+TRANSLEN
-XBUFSEL
-BUSAVL
AD00-7
-MWR
UPPER BITS
LOWER BITS
TRANSLATE INPUT BUFFER
TRANSLATE OUTPUT BUFFER
XCVR 74LS245 E18
74LS244 D12
74LS240 E12
A255 A000
MEM IM5603 D13
MEM IM5603 E13
RN1 330
+5V
-RD
-MR
P1-30
P1-29
P1-28
P1-27
P1-26
P1-25
P1-24
P1-23
P1-42
P1-40
360X SERIAL-IO
-DADT TRANSLATOR
-XB INTERFACE
44690816
LOC 1PC1
CROSS REF NO 0809

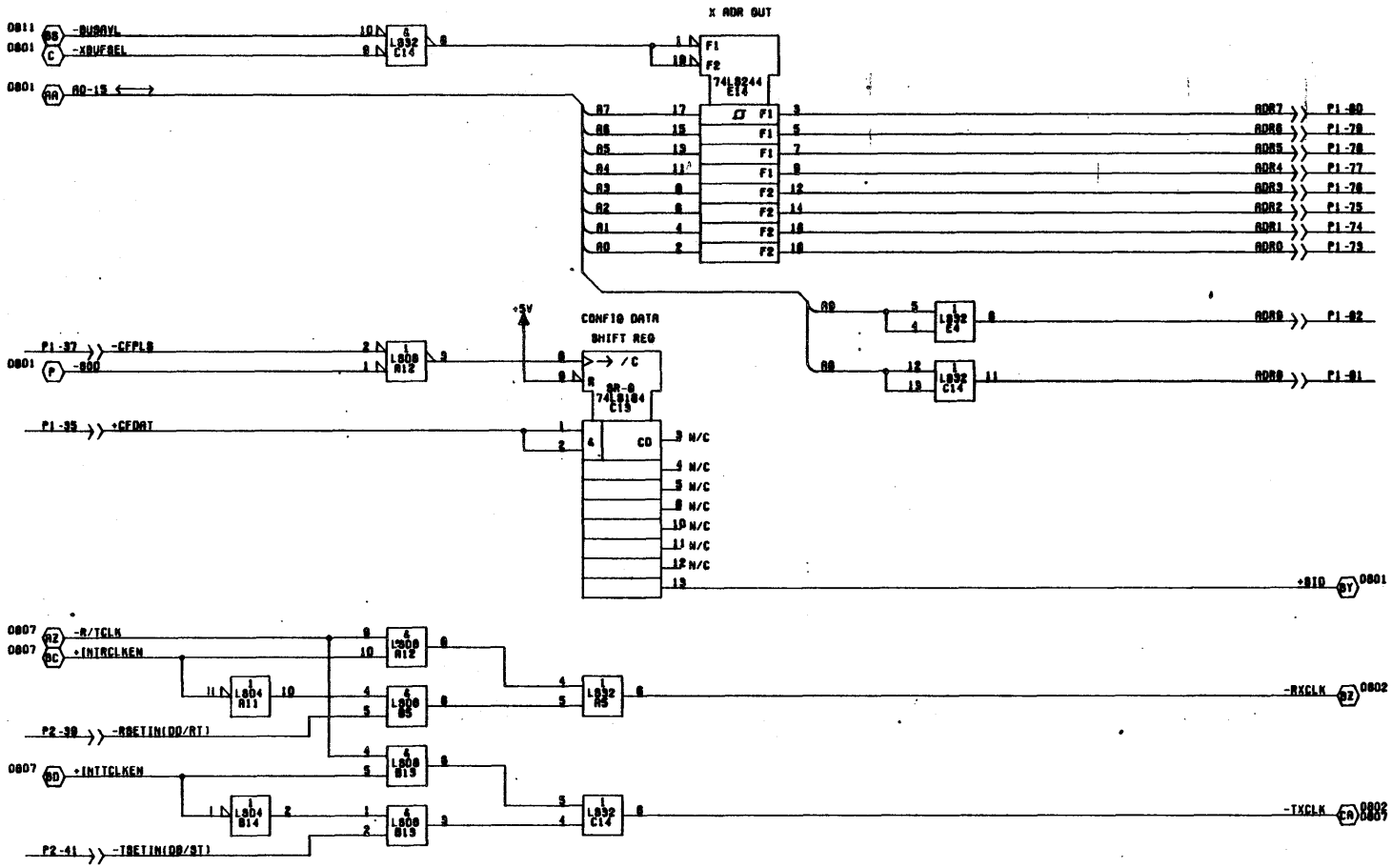

CROSS REF NO. 0810	LOC. 1PC1

360X SERIAL-IO
-CONFIG DATA IN
-XB ADDRESS OUT

CODE IDENT	DWG NO	REV
C	44690816	A
LOC 1PC1	SHEET N	CROSS REF NO 0810

ED.44690816.RB232.10

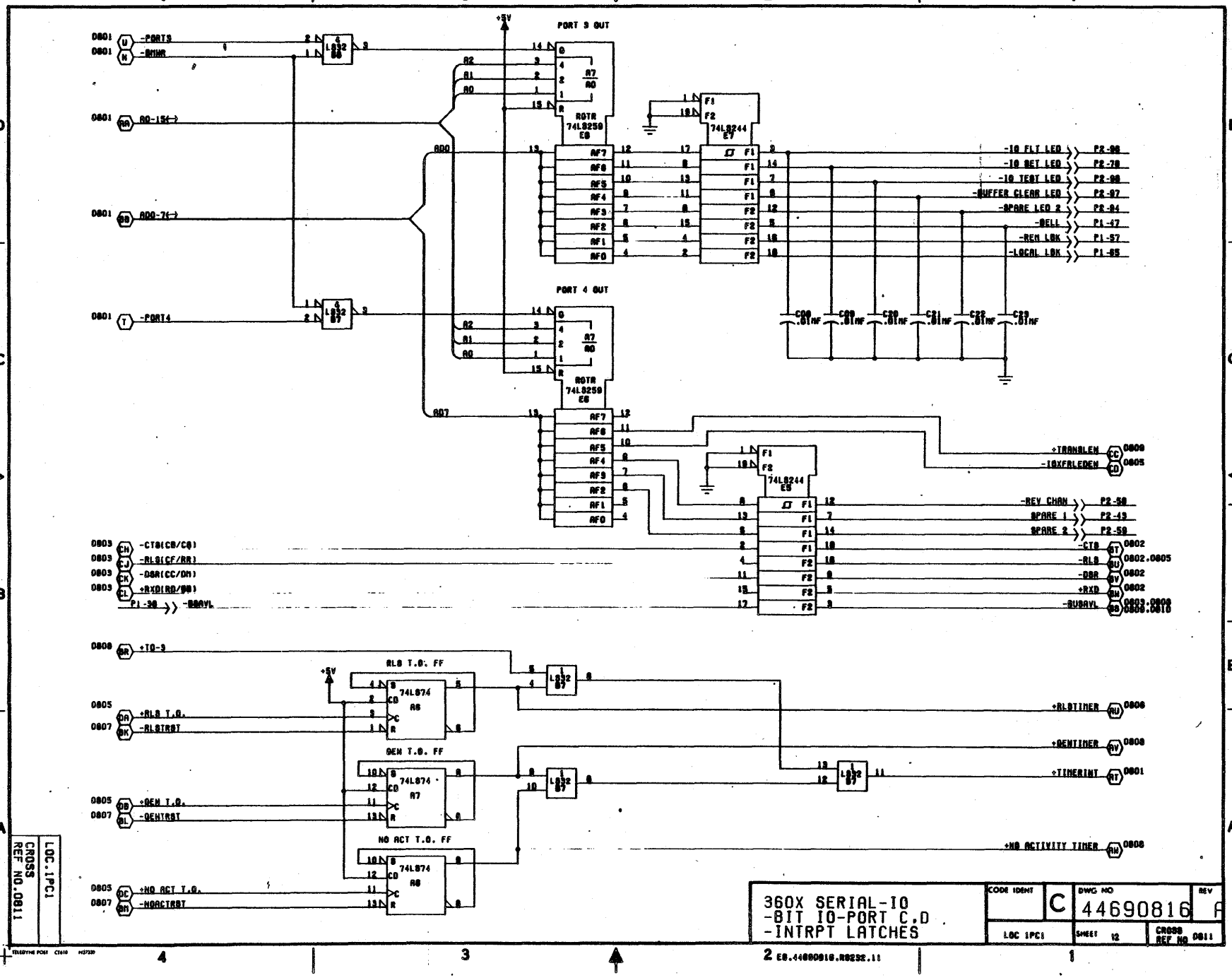

11-136

44690816

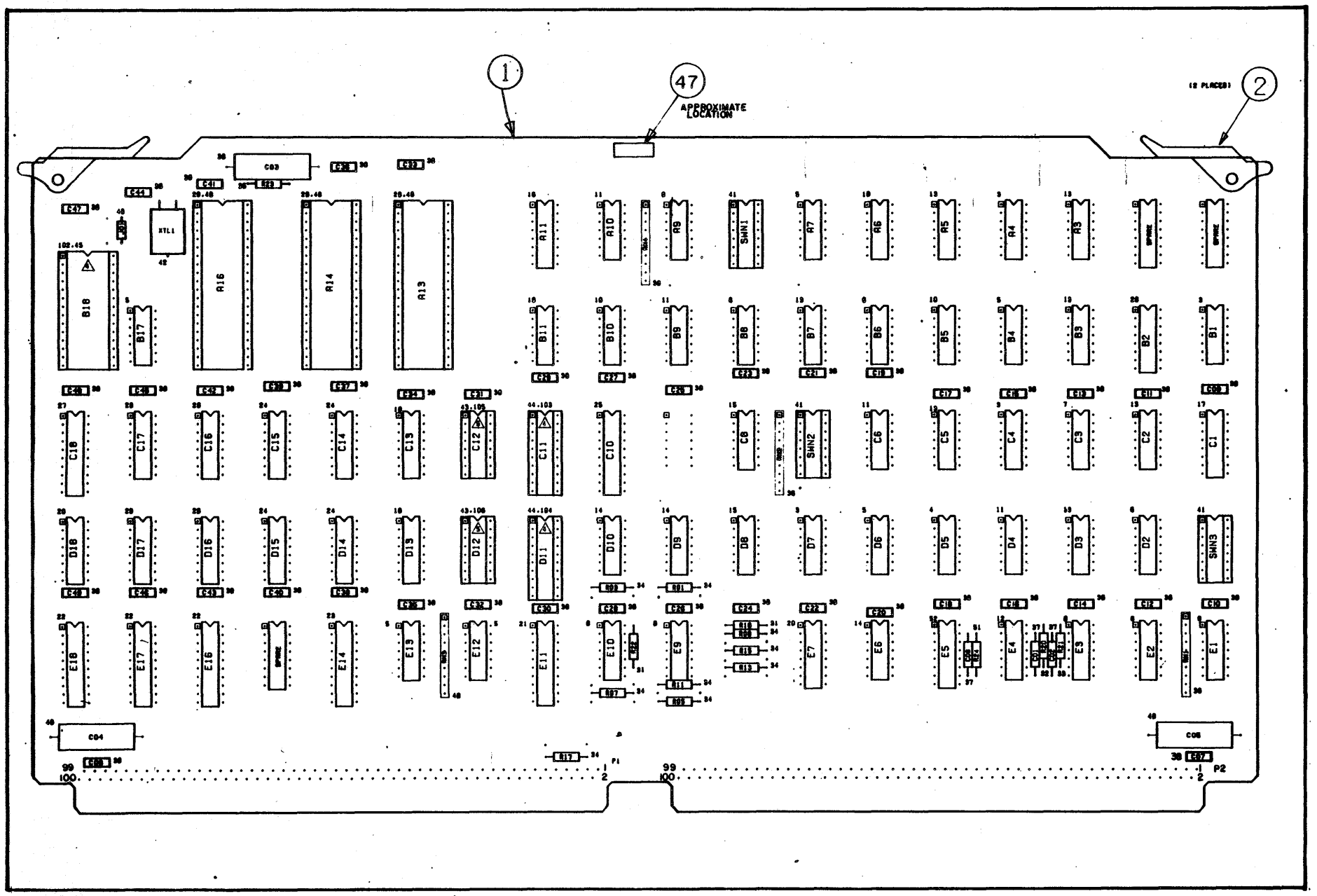

CENTRONICS PERSONALITY MODULE

CROSS REF NO.: 0800 PART NO: 44690617
MODULE LOC: 1PC1 REV: A
SCHEMATIC NO: 44690616 SHT: 02

MODULE INPUTS

SOURCE	SIGNAL NAME	MODULE CROSS REF NO.
0200/1PC2	5V (+)	0808/P1-97
0200/1PC2	5V (+)	0808/P1-98
0200/1PC2	5V (+)	0808/P1-99
0200/1PC2	5V (+)	0808/P1-100
0200/1PC2	5V (+)	0808/P2-3
0200/1PC2	5V (+)	0808/P2-4
0200/1PC2	BSAVL (-)	0809/P1-30
0200/1PC2	CFDAT (+)	0808/P1-35
0200/1PC2	CFPLS (-)	0808/P1-37
0200/1PC2	CLK (2 MHZ)	0812/P1-48
0200/1PC2	CPRST (-)	0807/P2-61
0700/6PC1	DATA BIT 1 (+)	0801/P1-55
	DATA BIT 1 RTN	0801/P1-56
0700/6PC1	DATA BIT 2 (+)	0801/P1-57
	DATA BIT 2 RTN	0801/P1-58
0700/6PC1	DATA BIT 3 (+)	0801/P1-59
	DATA BIT 3 RTN	0801/P1-60
0700/6PC1	DATA BIT 4 (+)	0801/P1-61
	DATA BIT 4 RTN	0801/P1-62
0700/6PC1	DATA BIT 5 (+)	0801/P1-63
	DATA BIT 5 RTN	0801/P1-64
0700/6PC1	DATA BIT 6 (+)	0801/P1-65
	DATA BIT 6 RTN	0801/P1-66
0700/6PC1	DATA BIT 7 (+)	0801/P1-67
	DATA BIT 7 RTN	0801/P1-68
0700/6PC1	DATA BIT 8 (+)	0801/P1-69
	DATA BIT 8 RTN	0801/P1-70
0700/6PC1	DATA STROBE (+)	0801/P1-21
	DATA STROBE RTN	0801/P1-22
0200/1PC2	ENRDY (-)	0810/P1-44
0200/1PC2	FAULT (-)	0809/P1-52
	GND	0808/P1-1
	GND	0808/P1-2
0200/1PC2	GND	0808/P1-91
0200/1PC2	GND	0808/P1-92
0200/1PC2	GND	0808/P1-95
0200/1PC2	GND	0808/P1-96
0200/1PC2	GND	0808/P2-1
0200/1PC2	GND	0808/P2-2

CROSS REF NO.: 0800 PART NO: 44690617
MODULE LOC: 1PC1 REV: A
SCHEMATIC NO: 44690616 SHT: 03

MODULE INPUTS (continued)

SOURCE	SIGNAL NAME	MODULE CROSS REF NO.
	GND	0808/P2-19
	GND	0808/P2-20
0200/1PC2	GND	0808/P2-35
0200/1PC2	GND	0808/P2-36
0200/1PC2	GND	0808/P2-37
0200/1PC2	GND	0808/P2-39
0200/1PC2	GND	0808/P2-41
	GND	0808/P2-49
	GND	0808/P2-50
0200/1PC2	GND	0808/P2-58
0200/1PC2	GND	0808/P2-59
	GND	0808/P2-69
	GND	0808/P2-70
0200/1PC2	GND	0808/P2-99
0200/1PC2	GND	0808/P2-100
0700/6PC1	INPUT PRIME (-)	0807/P1-71
0700/6PC1	INPUT PRIME RTN	0807/P1-72
0200/1PC2	PAPER ERROR (-)	0812/P1-36
0700/6PC1	PARITY BIT (+)	0801/P1-11
	PARITY BIT RTN	0801/P1-12
0300/1PC3	PWR INH (-)	0810/P1-54
0200/1PC2	START SW (-)	0807/P1-31

CROSS REF NO: 0800
MODULE LOC: 1PC1
SCHEMATIC NO: 44690616

PART NO: 44690617
REV: A
SHT: 04

MODULE OUTPUTS

MODULE CROSS REF NO	SIGNAL NAME	DESTINATION
0812/P1-4	10 FLT (+)	0200/1PC2
0806/P1-45	10 LIP (-)	0200/1PC2
0812/P1-13	125 KHZ CLOCK	0700/6PC1
0812/P1-14	125 KHZ CLOCK RTN	
0812/P1-19	ACKNOWLEDGE (-)	0700/6PC1
0812/P1-20	ACKNOWLEDGE RTN	0700/6PC1
0806/P1-73	ADR 0 (+)	0200/1PC2
0806/P1-74	ADR 1 (+)	0200/1PC2
0806/P1-75	ADR 2 (+)	0200/1PC2
0806/P1-76	ADR 3 (+)	0200/1PC2
0806/P1-77	ADR 4 (+)	0200/1PC2
0806/P1-78	ADR 5 (+)	0200/1PC2
0806/P1-79	ADR 6 (+)	0200/1PC2
0806/P1-80	ADR 7 (+)	0200/1PC2
0806/P1-81	ADR 8 (+)	0200/1PC2
0806/P1-82	ADR 9 (+)	0200/1PC2
0808/P1-47	BEL PULSE (-)	0500/5PC1
0812/P1-7	BUSY (+)	0700/6PC1
0812/P1-8	BUSY RTN	
0812/P1-9	COMPRESSED PITCH (+)	0700/6PC1
0812/P1-10	COMPRESSED PITCH RTN	
0811/P1-42	CURD (-)	0200/1PC2
0811/P1-40	CUWR (-)	0200/1PC2
0804/P1-23	DB0 (+)	0200/1PC2
0804/P1-24	DB1 (+)	0200/1PC2
0804/P1-25	DB2 (+)	0200/1PC2
0804/P1-26	DB3 (+)	0200/1PC2
0804/P1-27	DB4 (+)	0200/1PC2
0804/P1-28	DB5 (+)	0200/1PC2
0804/P1-29	DB6 (+)	0200/1PC2
0804/P1-30	DB7 (+)	0200/1PC2
0812/P1-46	EXADV (-)	0200/1PC2
0812/P1-5	FAULT (-)	0700/6PC1
0812/P1-6	FAULT RTN	
0808/P1-41	LDCMPL (-)	0200/1PC2
0808/P1-39	LDEVFU (-)	0200/1PC2
0812/P1-34	MEMCS (-)	0200/1PC2
0812/P1-17	OUT OF PAPER (+)	0700/6PC1
0812/P1-18	OUT OF PAPER RTN	
0812/P1-15	SELECT (+)	0700/6PC1
0812/P1-16	SELECT RTN	
0808/P1-33	SSPLS (-)	0200/1PC2
0810/P1-3	START LAMP (-)	0200/1PC2
0808/P1-32	STREQ (-)	0200/1PC2

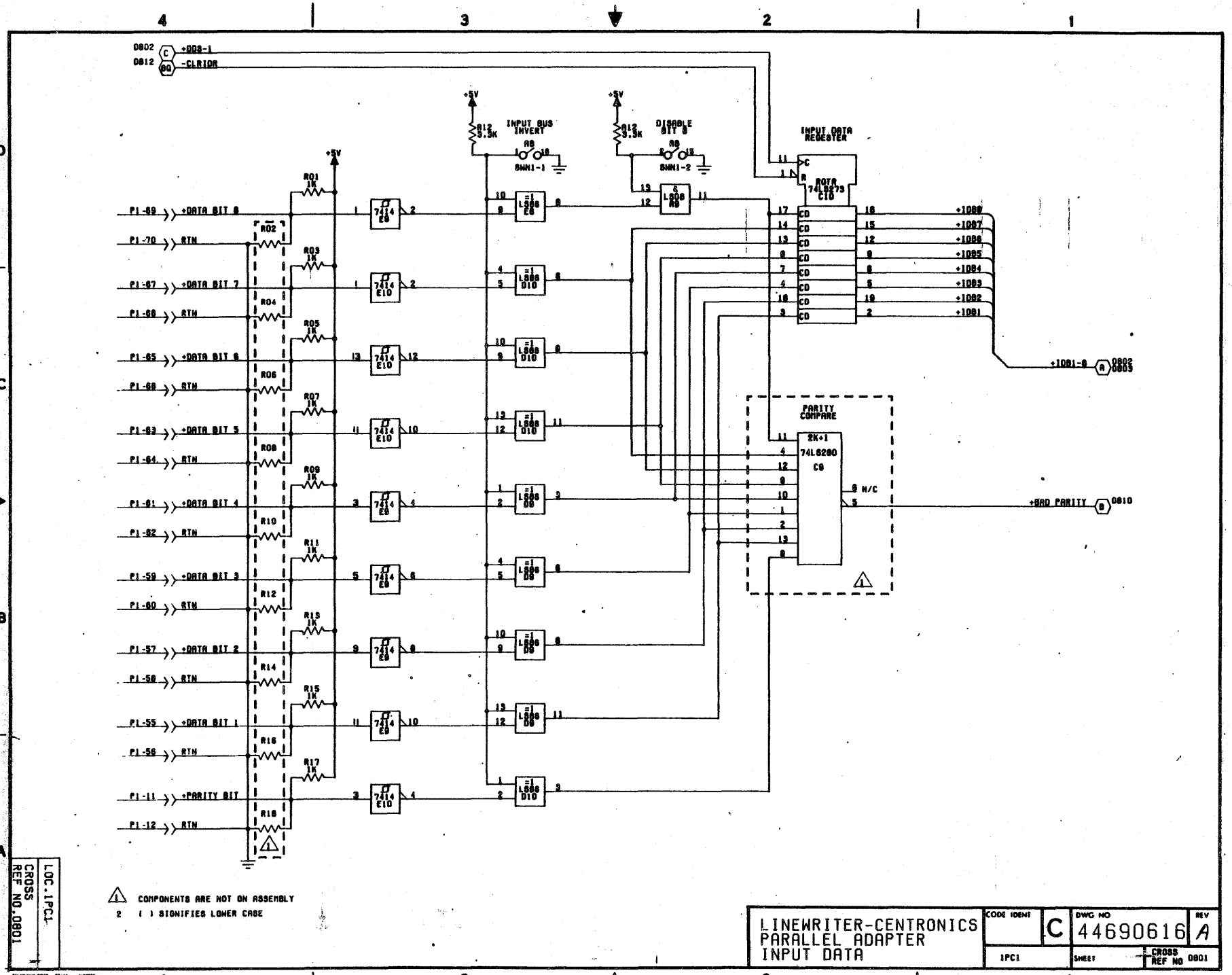

0802 +DDS-1
0812 -CLRIDR
INPUT BUS INVERT
DISABLE BIT 8
INPUT DATA REGISTER
ROTR 74LS273 C10
PARITY COMPARE
74LS280 C9
+BAD PARITY 0810
+IDB1-8 0802 0803
P1-69 +DATA BIT 8
P1-70 RTN
P1-67 +DATA BIT 7
P1-68 RTN
P1-65 +DATA BIT 6
P1-66 RTN
P1-63 +DATA BIT 5
P1-64 RTN
P1-61 +DATA BIT 4
P1-62 RTN
P1-59 +DATA BIT 3
P1-60 RTN
P1-57 +DATA BIT 2
P1-58 RTN
P1-55 +DATA BIT 1
P1-56 RTN
P1-11 +PARITY BIT
P1-12 RTN
COMPONENTS ARE NOT ON ASSEMBLY
( ) SIGNIFIES LOWER CASE
LOC.1PC1
CROSS REF NO.0801
LINEWRITER-CENTRONICS PARALLEL ADAPTER INPUT DATA
CODE IDENT C
DWG NO 44690616
REV A
1PC1
SHEET
CROSS REF NO 0801

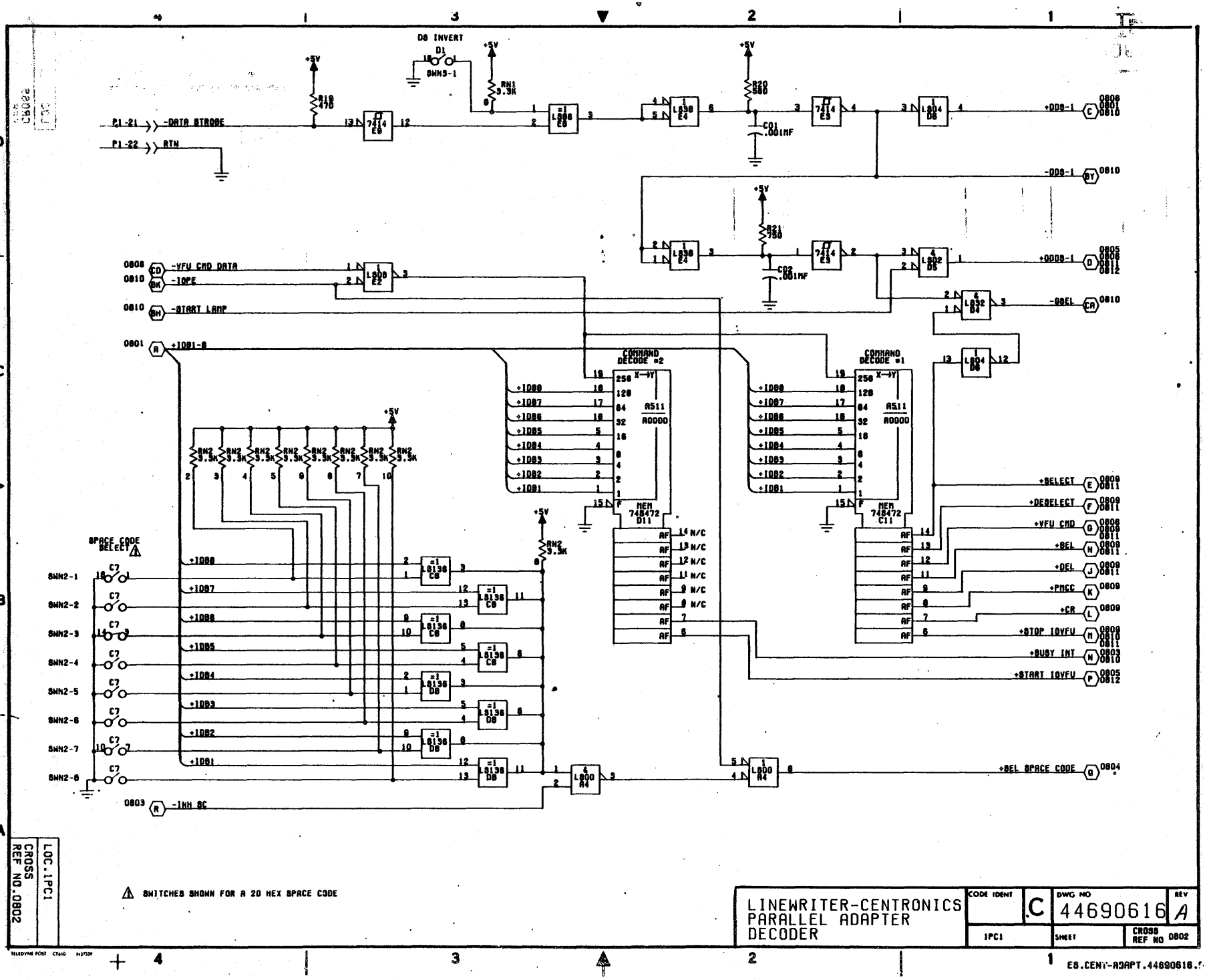
DS INVERT
D1
SWN3-1
+5V
R19 470
RN1 3.3K
R20 560
C01 .001MF
R21 750
C02 .001MF
P1-21 -DATA STROBE
P1-22 RTN
+DDS-1
-DDS-1
+QDDS-1
-QSEL
-VFU CMD DATA
-IOPE
-START LAMP
+IDB1-8
COMMAND DECODE #2
COMMAND DECODE #1
A511
A0000
MEM 74S472 D11
MEM 74S472 C11
+SELECT
+DESELECT
+VFU CMD
+BEL
+DEL
+PMCC
+CR
+STOP IOVFU
+BUSY INT
+START IOVFU
+SEL SPACE CODE
SPACE CODE SELECT
SWN2-1
SWN2-2
SWN2-3
SWN2-4
SWN2-5
SWN2-6
SWN2-7
SWN2-8
-INH SC
SWITCHES SHOWN FOR A 20 HEX SPACE CODE
LOC.1PC1
CROSS REF NO.0802
LINEWRITER-CENTRONICS PARALLEL ADAPTER DECODER
CODE IDENT
C
DWG NO
44690616
REV
A
1PC1
SHEET
CROSS REF NO 0802
ES.CENT-ADAPT.44690616.

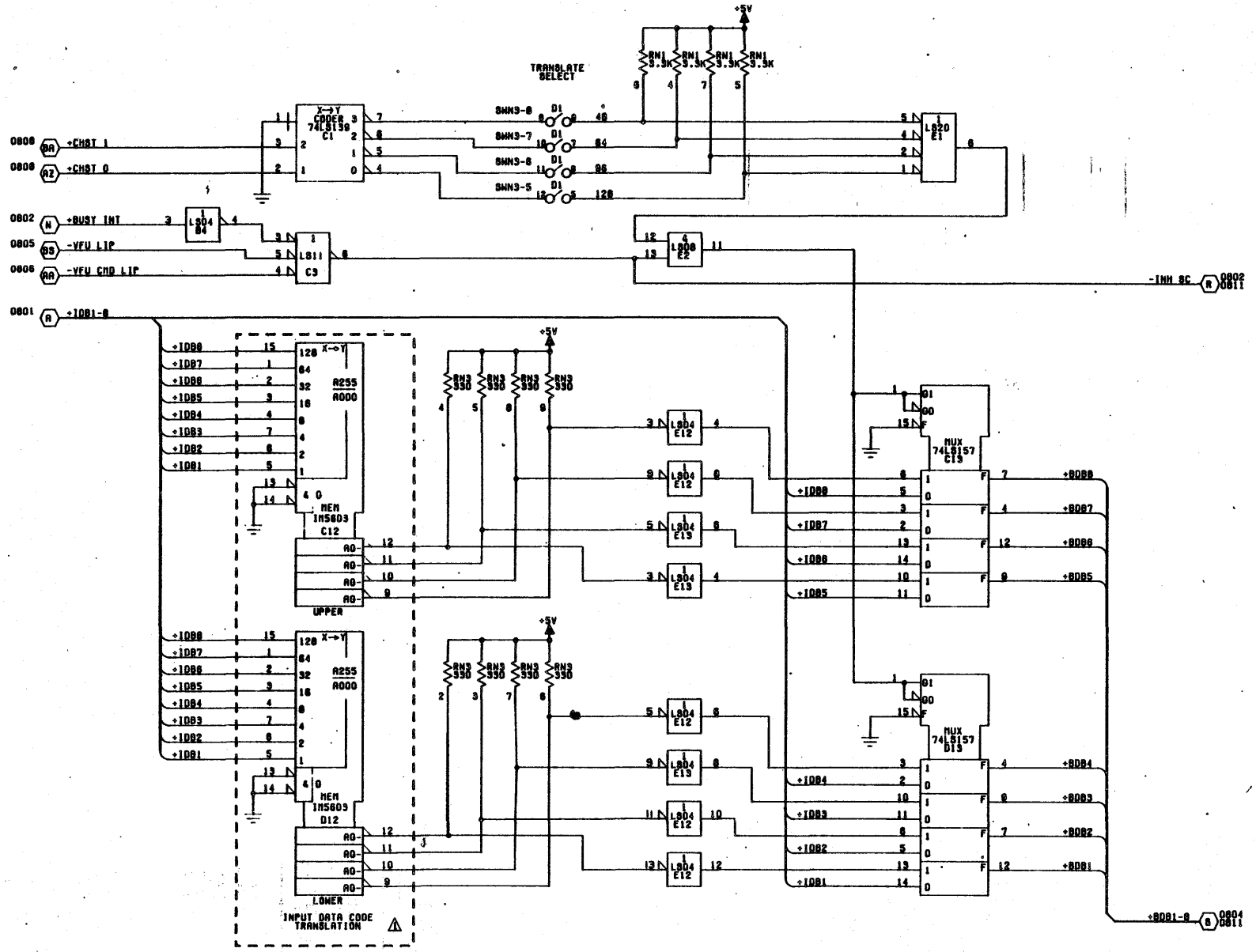

⚠ OPTIONAL AND NOT INCLUDED ON ASSEMBLY

LOC.:IPC1

CROSS REF NO.0803

LINEWRITER-CENTRONICS PARALLEL ADAPTER INPUT DATA TRANSLATION	CODE IDENT	C	DWG NO 44690616	REV A
	IPC1		SHEET	CROSS REF NO 0803

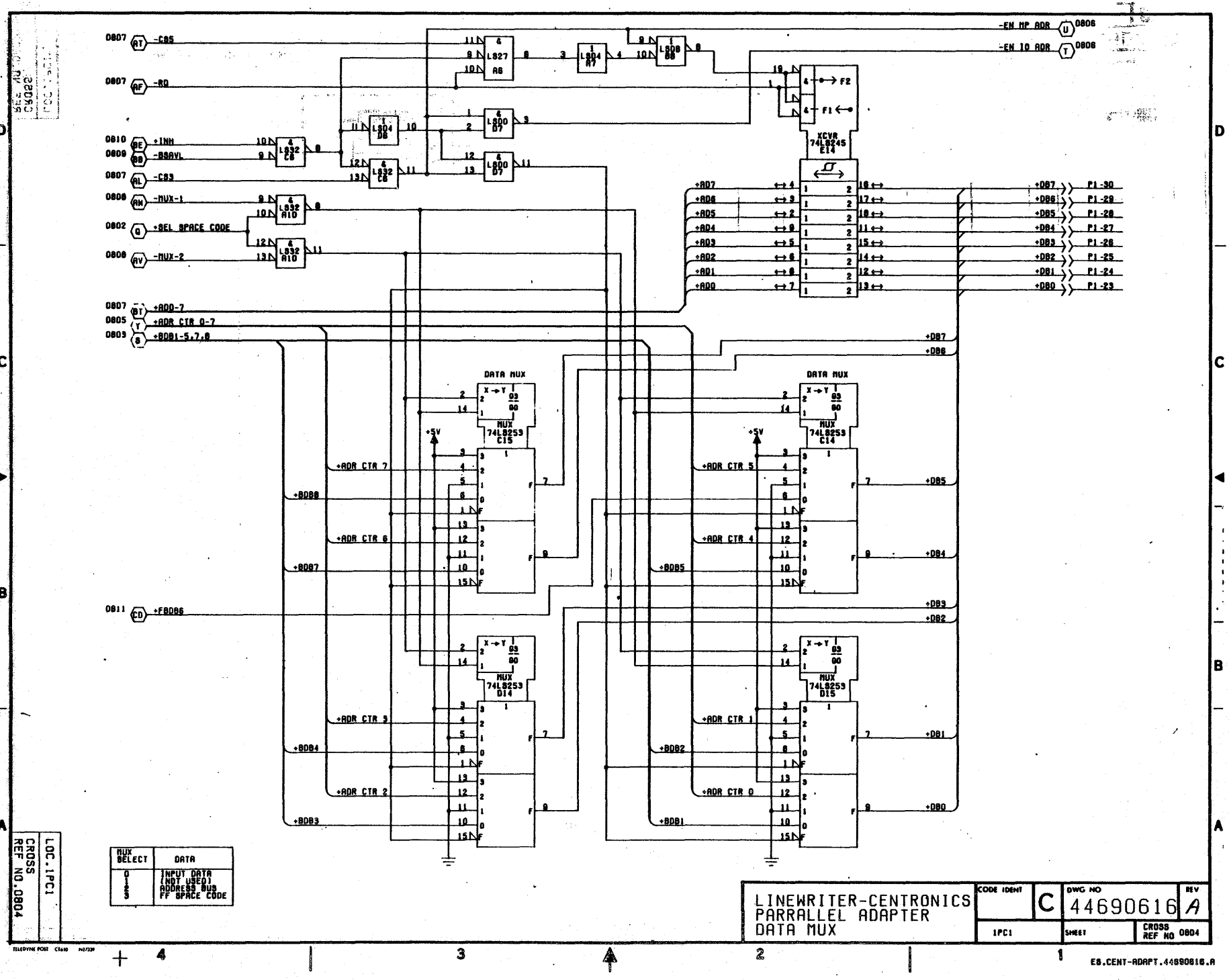

MUX SELECT	DATA
0	INPUT DATA
1	(NOT USED)
2	ADDRESS BUS
3	FF SPACE CODE

LINEWRITER-CENTRONICS
PARRALLEL ADAPTER
DATA MUX

CODE IDENT	C	DWG NO 44690616	REV A
1PC1		SHEET	CROSS REF NO 0804

ES.CENT-ADAPT.44690616.A

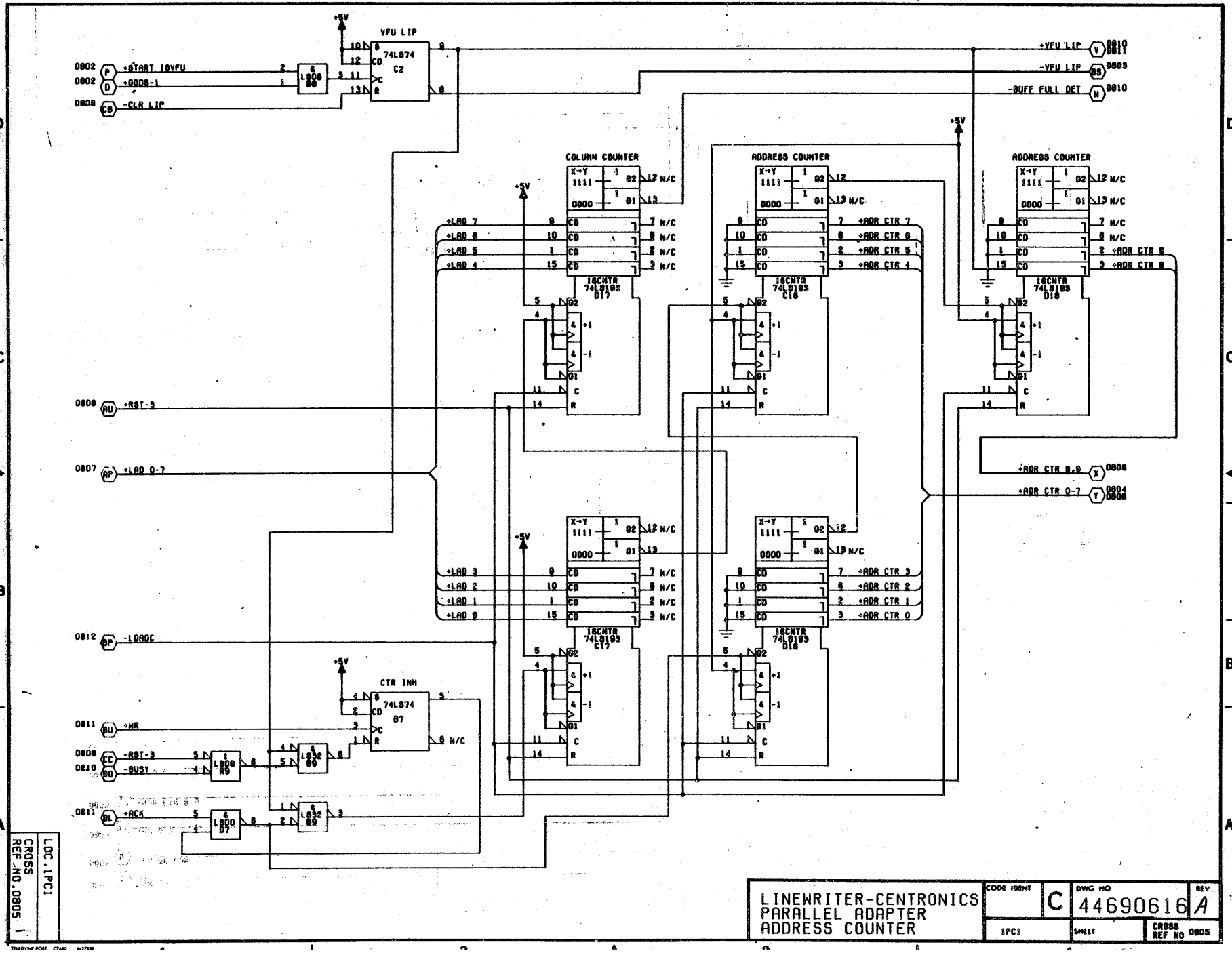

LINEWRITER-CENTRONICS
PARALLEL ADAPTER
ADDRESS COUNTER

CODE IDENT: C | DWG NO: 44690616 | REV: A

1PC1 | SHEET | CROSS REF NO 0805

CROSS REF NO. 0805 | LOC. 1PC1

11-146

44690616

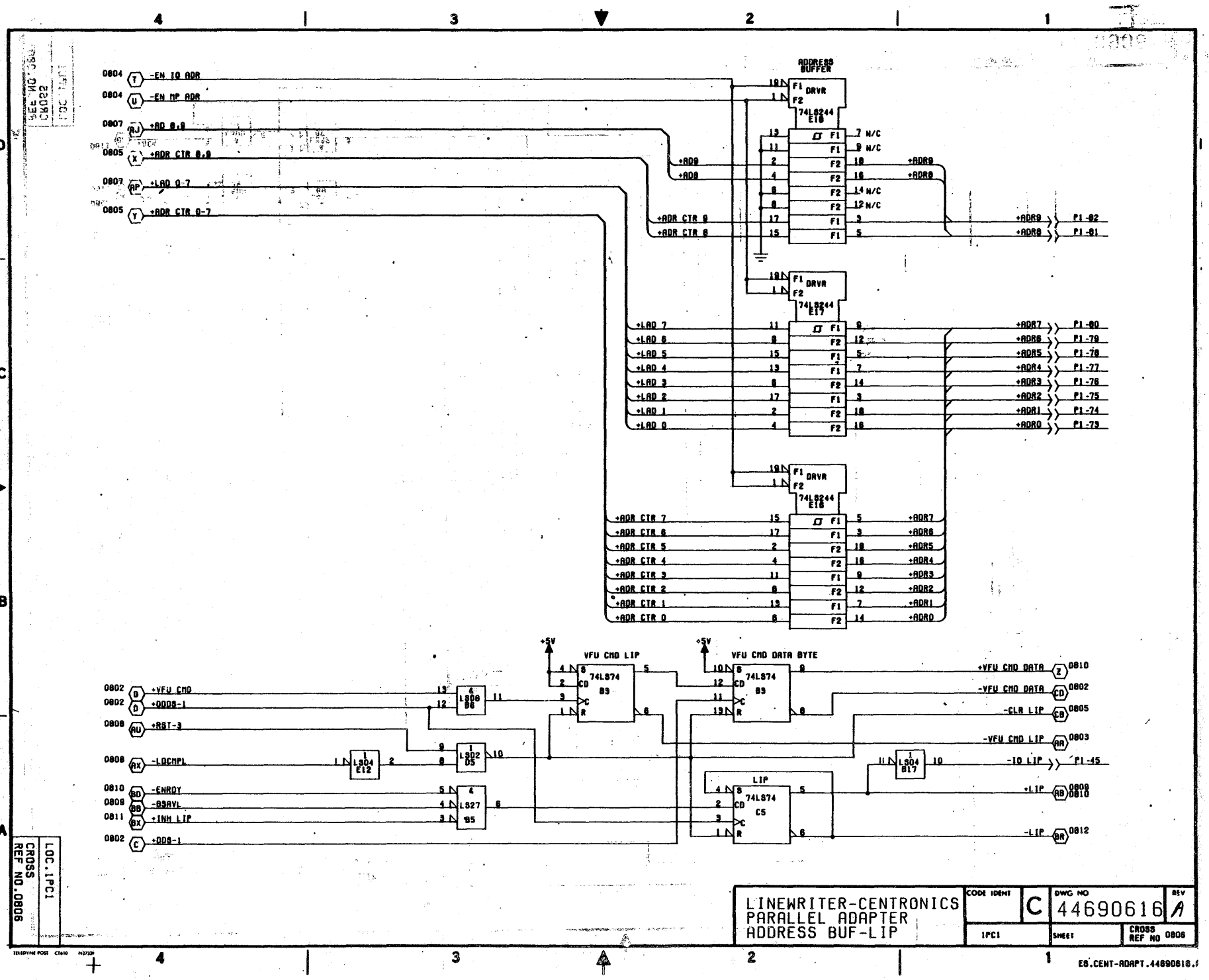
ADDRESS BUFFER
-EN IO ADR
-EN MP ADR
+AD 8,9
+ADR CTR 8,9
+LAD 0-7
+ADR CTR 0-7
74LS244
DRVR
+AD9
+AD8
+ADR CTR 9
+ADR CTR 8
+LAD 7
+LAD 6
+LAD 5
+LAD 4
+LAD 3
+LAD 2
+LAD 1
+LAD 0
+ADR CTR 7
+ADR CTR 6
+ADR CTR 5
+ADR CTR 4
+ADR CTR 3
+ADR CTR 2
+ADR CTR 1
+ADR CTR 0
+VFU CMD
+DDS-1
+RST-3
-LDCMPL
-ENRDY
-BSAVL
+INH LIP
VFU CMD LIP
VFU CMD DATA BYTE
LIP
74LS74
+VFU CMD DATA
-VFU CMD DATA
-CLR LIP
-VFU CMD LIP
-IO LIP
+LIP
-LIP
+5V
LINEWRITER-CENTRONICS
PARALLEL ADAPTER
ADDRESS BUF-LIP
CODE IDENT
C
DWG NO
44690616
REV
A
SHEET
CROSS REF NO 0805
LOC.IPC1
CROSS REF NO.0805

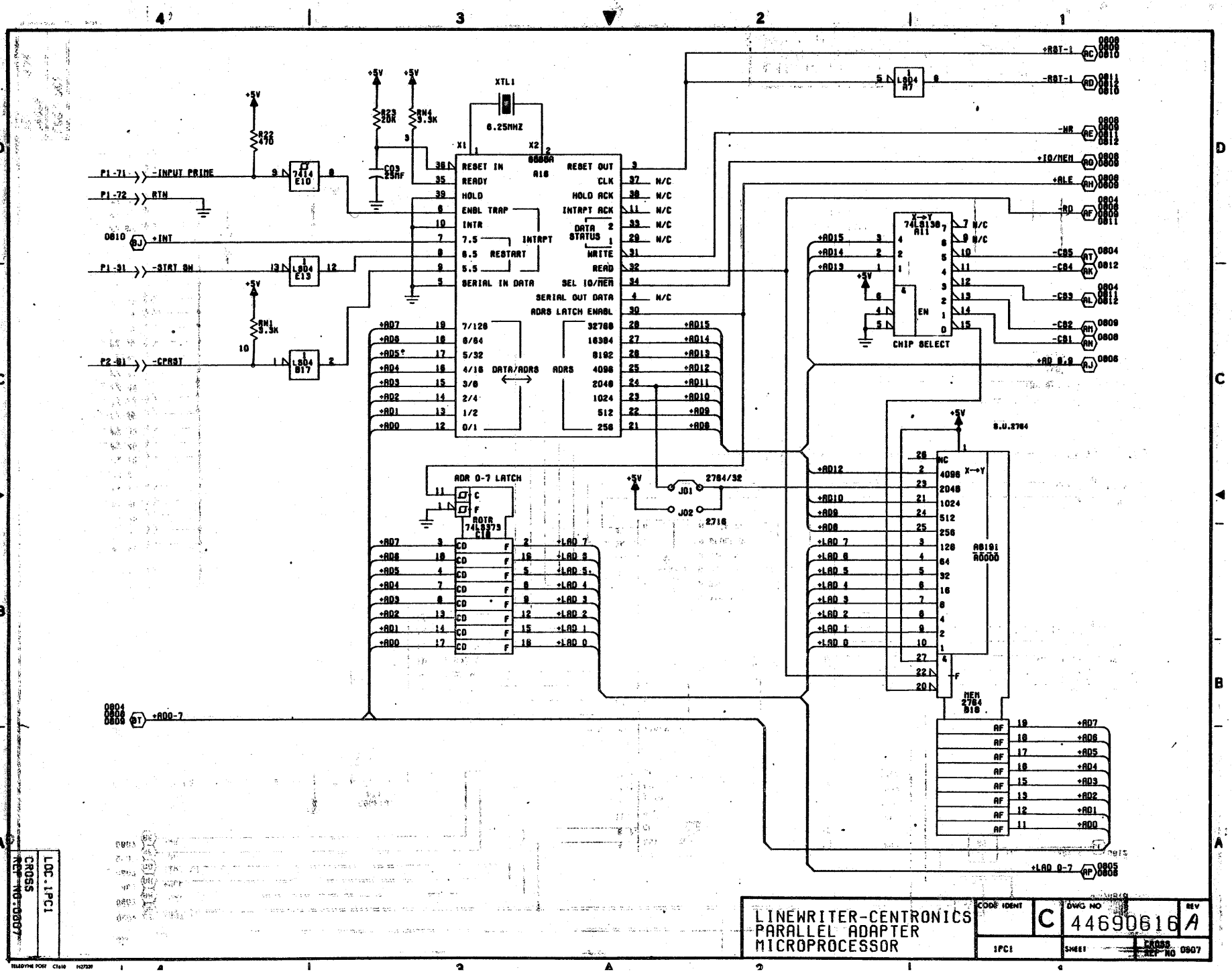

LINEWRITER-CENTRONICS
PARALLEL ADAPTER
MICROPROCESSOR
CODE IDENT
C
DWG NO
44690616
REV
A
1PC1
SHEET
CROSS REF NO 0807
LOC.1PC1
CROSS REF NO.0807
XTL1
6.25MHZ
8888A
A16
RESET IN
READY
HOLD
ENBL TRAP
INTR
7.5
6.5
5.5
SERIAL IN DATA
RESTART
INTRPT
RESET OUT
CLK
HOLD ACK
INTRPT ACK
DATA STATUS
WRITE
READ
SEL IO/MEM
SERIAL OUT DATA
ADRS LATCH ENABL
DATA/ADRS
ADRS
P1-71 -INPUT PRIME
P1-72 RTN
P1-31 -STRT SW
P2-81 -CPRST
+INT
+RST-1
-RST-1
-WR
+IO/MEM
+ALE
-RD
-CS5
-CS4
-CS3
-CS2
-CS1
+AD 8,9
+AD0-7
+LAD 0-7
CHIP SELECT
74LS138
A11
ADR 0-7 LATCH
74LS373
C18
2764/32
2716
J01
J02
S.U.2764
A8191
A0000
MEM
2764
B18

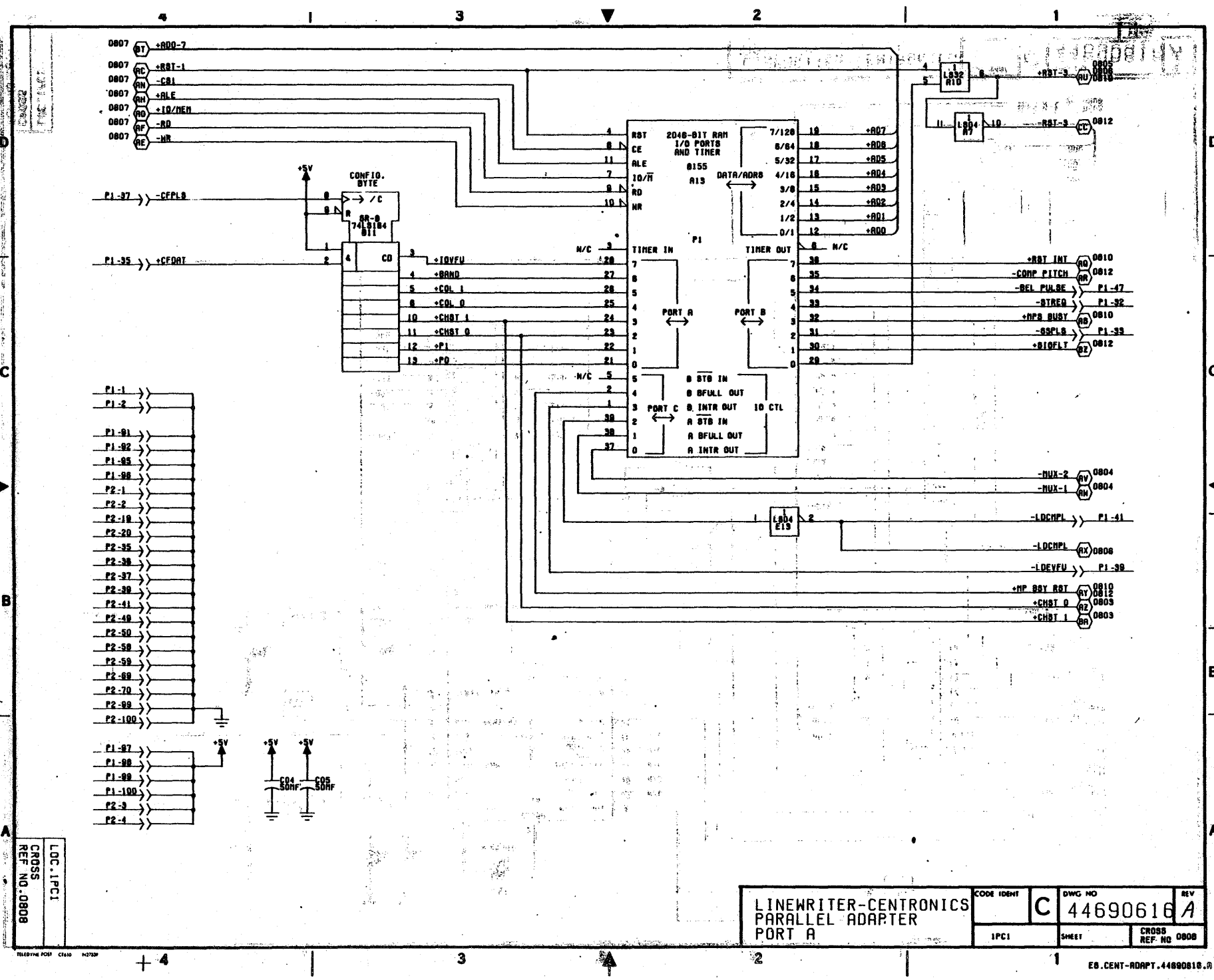

11-149

44690616

CROSS REF NO.0808

LOC.1PC1

LINEWRITER-CENTRONICS PARALLEL ADAPTER PORT A	CODE IDENT C	DWG NO 44690616	REV A
	1PC1	SHEET	CROSS REF NO 0808

E8.CENT-ADAPT.44690616.A

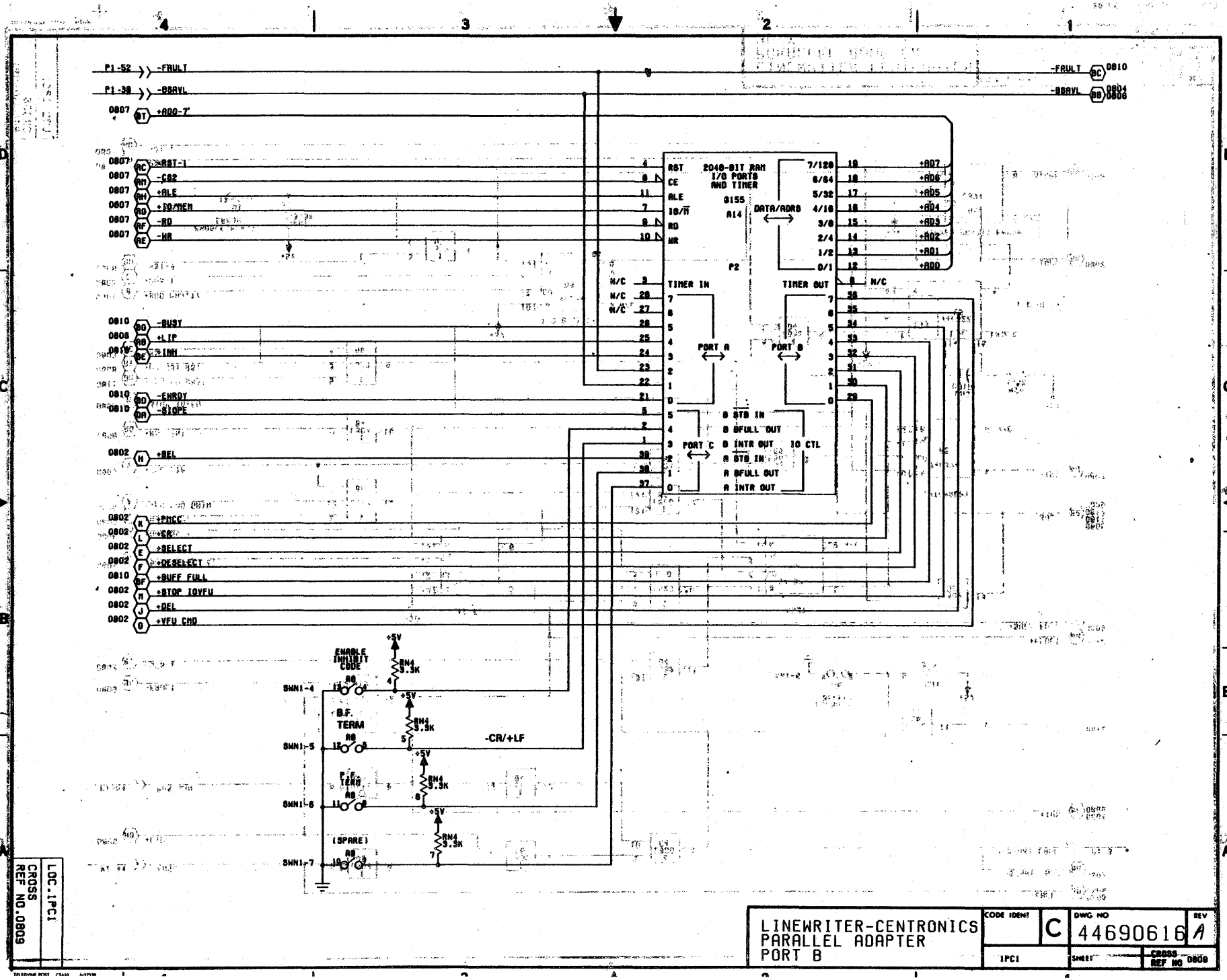

LOC.1PCI
CROSS REF NO.0809

LINEWRITER-CENTRONICS PARALLEL ADAPTER PORT B	CODE IDENT C	DWG NO 44690616	REV A
	1PCI	SHEET	CROSS REF NO 0809

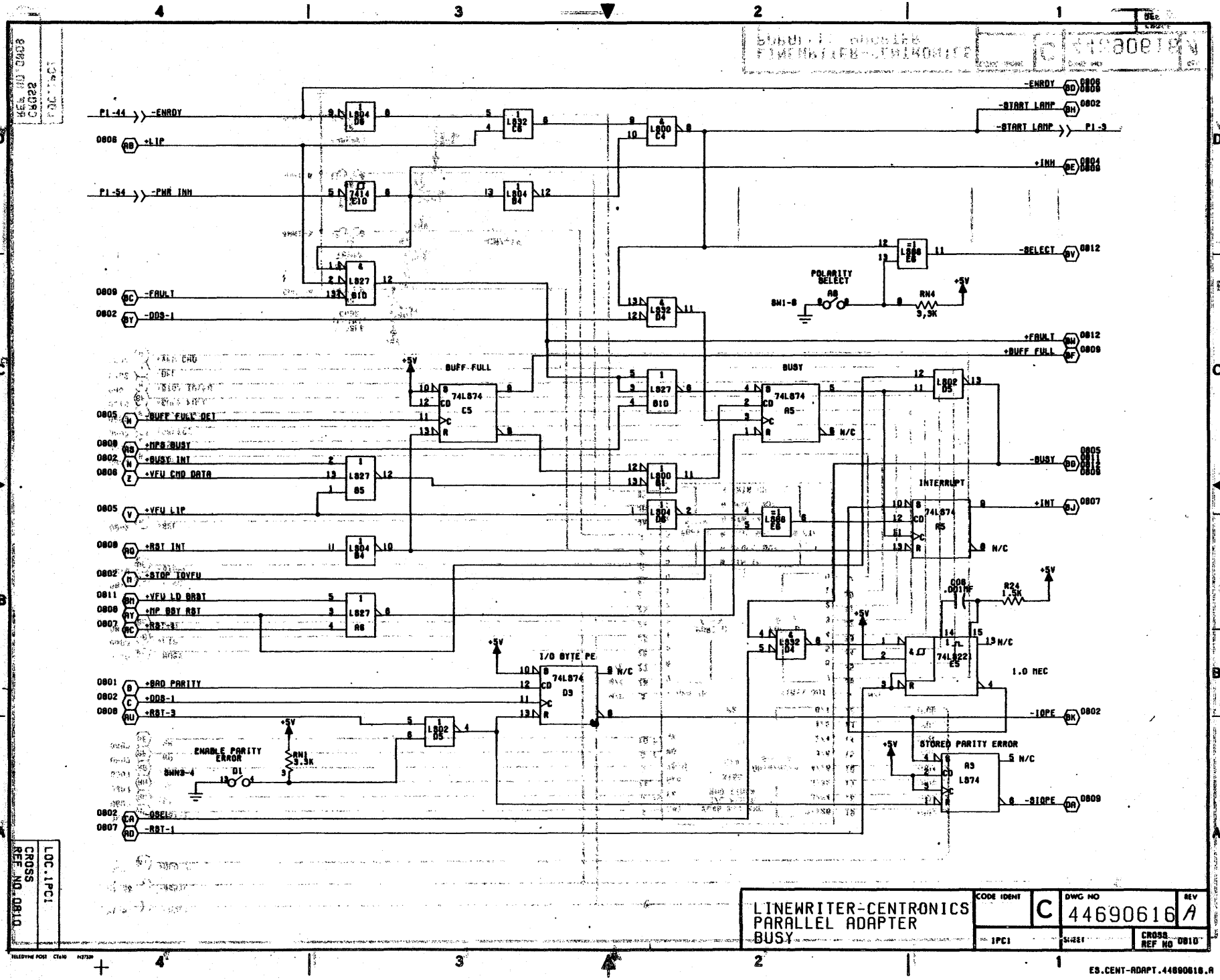

LINEWRITER-CENTRONICS
PARALLEL ADAPTER
BUSY

CODE IDENT C | DWG NO 44690616 | REV A

IPC1 | SHEET | CROSS REF NO 0810

ES.CENT-ADAPT.44690616.A

11-151

44690616

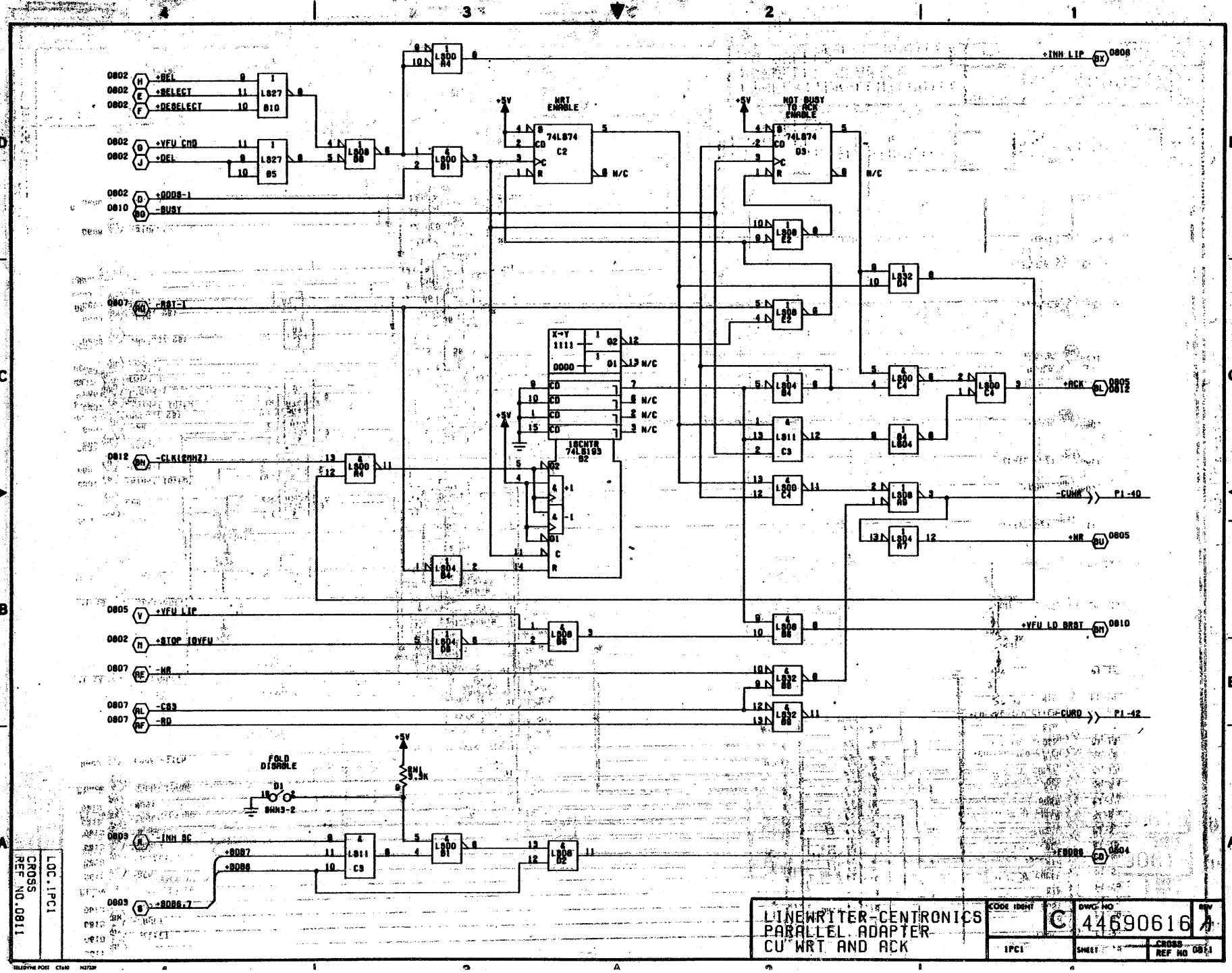
+INH LIP
+SEL
+SELECT
+DESELECT
+VFU CMD
+DEL
+DODS-1
-BUSY
-RST-1
-CLK(2MHZ)
+VFU LIP
+STOP IOVFU
-MR
-CS3
-RD
-INH BC
+DOB7
+DOB6
+DOB6.7
NRT ENABLE
NOT BUSY TO ACK ENABLE
74LS74
IOCNTR 74LS193
FOLD DISABLE
SW1 4.3K
SW3-2
+RCK
-CUWR
+NR
+VFU LD BRST
-CURD
+FDOB6
LINEWRITER-CENTRONICS PARALLEL ADAPTER CU WRT AND ACK
CODE IDENT
C
DWG NO
44690616
REV
A
IPC1
SHEET
CROSS REF NO
LOC.IPC1
CROSS REF NO.0811

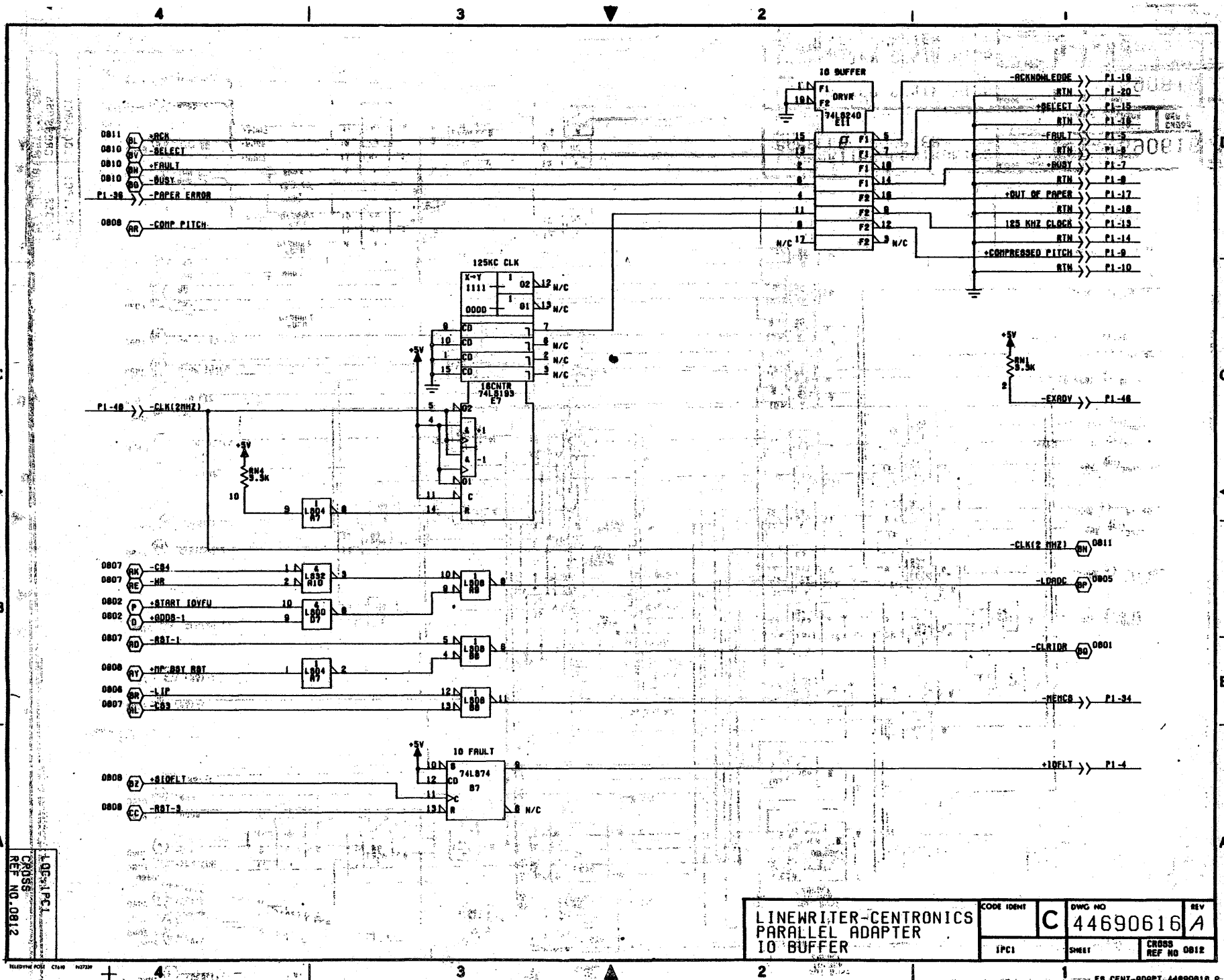
IO BUFFER
74LS240
DRVR
-ACKNOWLEDGE
RTN
+SELECT
-FAULT
+BUSY
+OUT OF PAPER
125 KHZ CLOCK
+COMPRESSED PITCH
-ACK
-SELECT
+FAULT
-BUSY
-PAPER ERROR
-COMP PITCH
125KC CLK
74LS193
IOCNTR
E7
-CLK(2MHZ)
-EXADV
-CLK(2 MHZ)
-LOADC
-CLRIOR
-MEMCS
IO FAULT
74LS74
+IOFLT
-RST-3
-CS4
-MR
+START IOVFU
+ADDS-1
-RST-1
+MF BSY RST
-IP
-CS3
LINEWRITER-CENTRONICS
PARALLEL ADAPTER
IO BUFFER
44690616
ES.CENT-ADAPT.44690616.A